SYM-DB-TB
Installation Guide

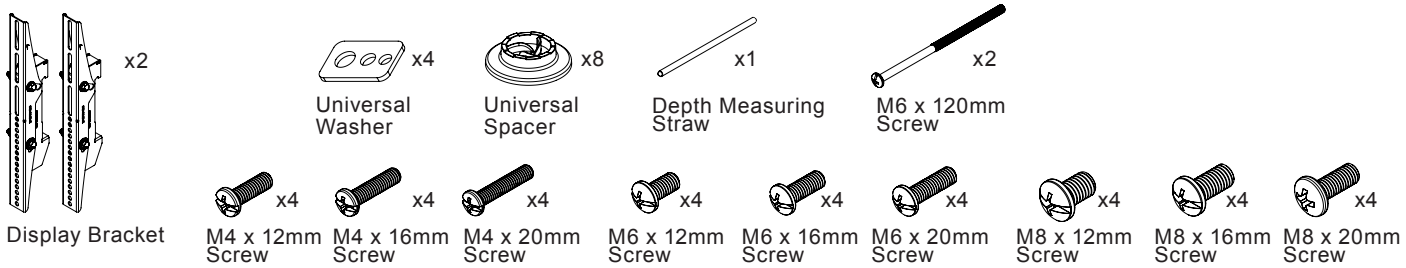

1

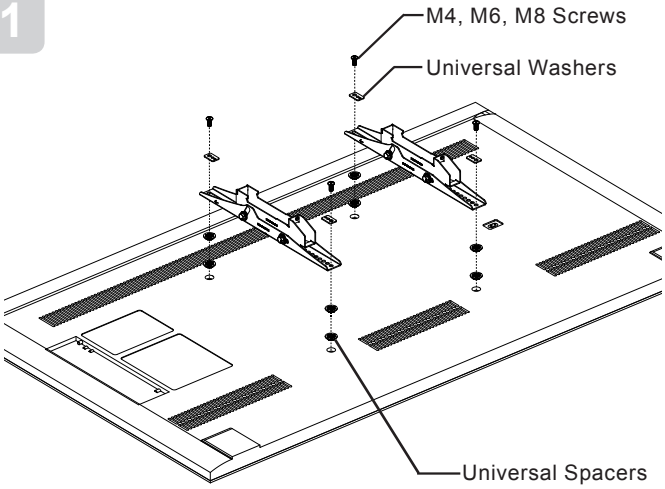

Use a depth measuring straw to determine the appropriate screw needed for the display.
Use Universal Spacers when necessary (optional).

2

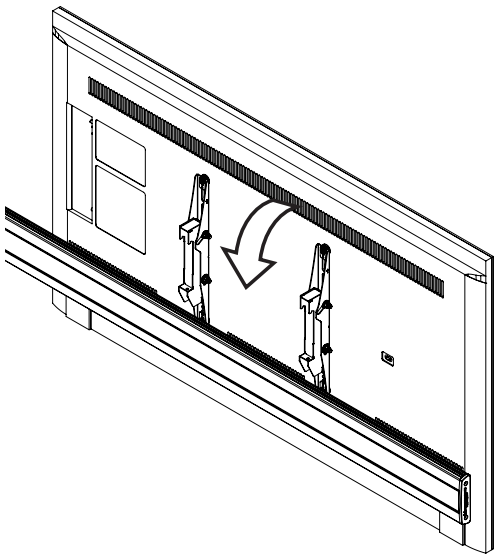

3

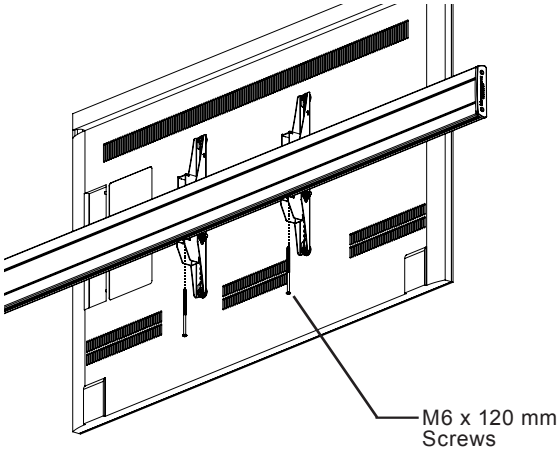

Install two (2) M6 x 120 mm screws on the display brackets to lock down the display brackets.

4

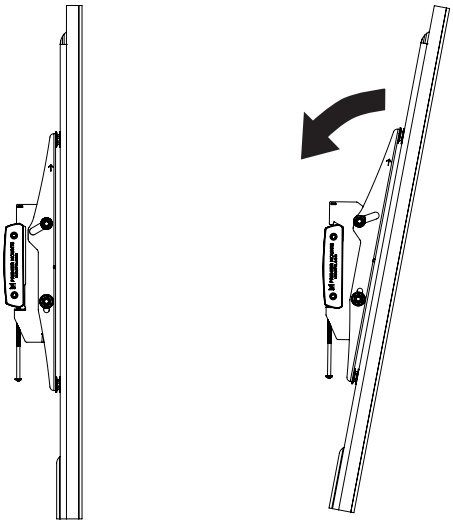

Flat Position **Tilt Position**

www.mounts.com | North America 800.368.9700 | International +1-714-632-7100
1321 S. State College Blvd., Fullerton, CA 92831 USA