For more informationon SCIENSCOPE products, please visit our website at **http://www.scienscope.com**.

For ordering assistance, please call us at Toll-Free **1-800-216-1800**, or **(909) 590-7273**.

5751 Schaefer Ave. Chino, CA 91710
Tel (909)590-7273
Toll-Free (800)216-1800
Fax (909)494-5513
E-mail info@scienscope.com

http://www.scienscope.com/

GENERAL PRODUCT QUICK SETUP GUIDE

June, 2013

© SCIENSCOPE International Inc., Chino, CA

RECYCLE , REDUCE, REUSE
PRINTED IN U.S.A

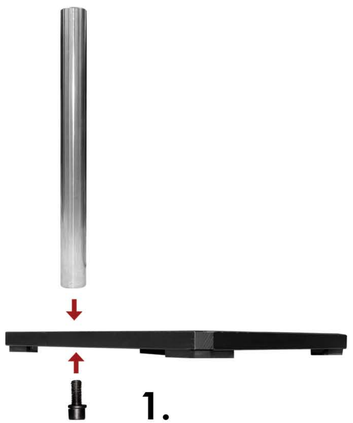

1.

2.

3.

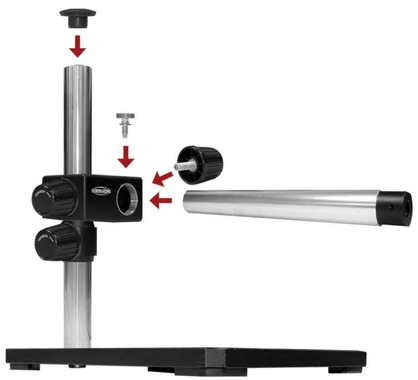

4.

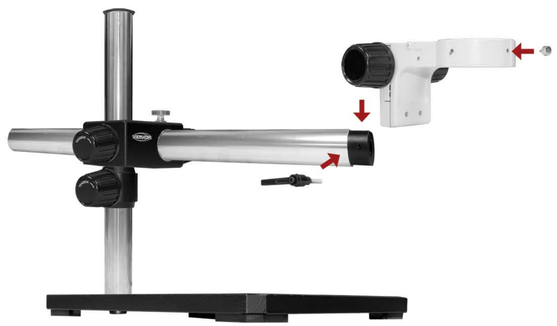

5.

6. Completed Stand

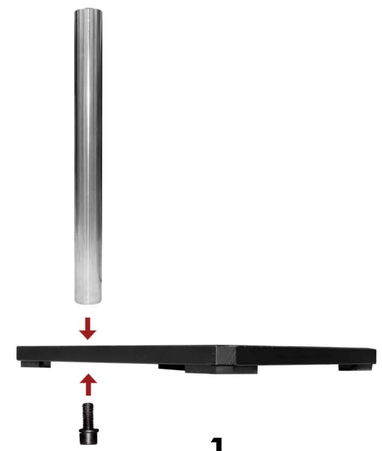

1.

2.

3.

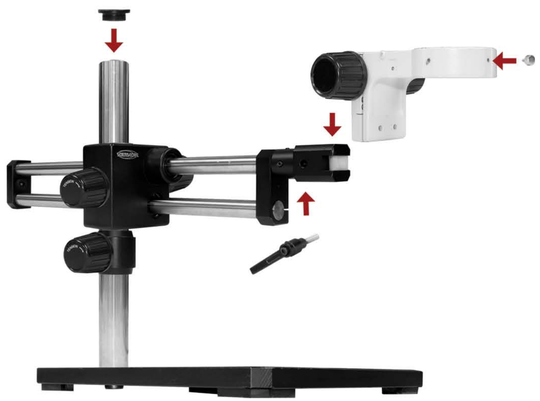

4.

5. Completed Stand

1.

2.

3.

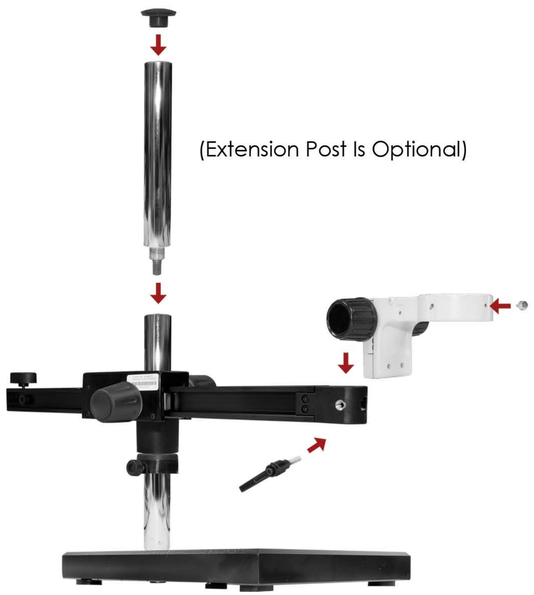

4.

5. Completed Stand

1.

2.

3.

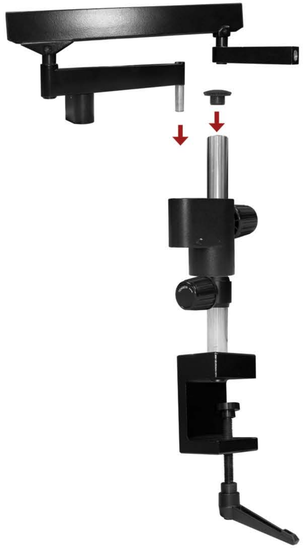

4.

5.

6. Completed Stand

1.

2.

3. Completed Body

1.

2.

3. Completed Body

✱ **The coupler design varies by models.**

1.

2.

3. Completed Assembly

1.

2.

3.

4. Completed Assembly

✱ Optional auxiliary lens shown

1.

2.

3.

4. Completed Assembly

or

Completed Body With
Opitonal Parts

Completed System

Completed System

HDMI Camera Cable Connection

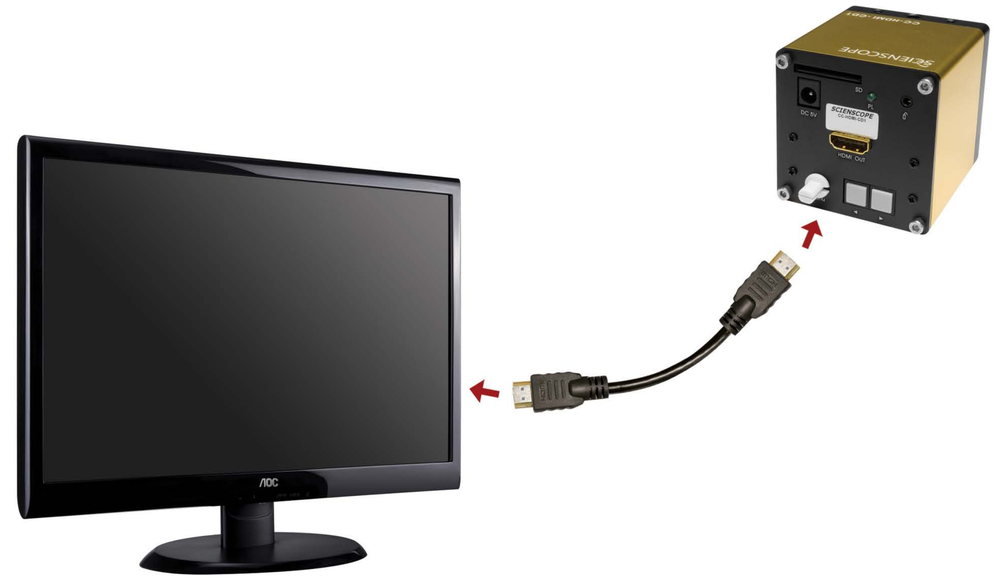

USB Camera Cable Connection

1. Install provided sofware first.

2.

CC-HDMI-CD1 or **CC-CMC-LCD10** Quick Start and trouble Shooting Guide

1) Connect the provided power supply to the wall outlet then to the camera. If you are using the **CC-HDMI-CD1** the voltage rating should be 5VDC. If you are using the **CC-CMC-LCD10** the voltage rating should be 12VDC.

2) Connect the camera to the monitor using the provided HDMI cable.

3) For the best image perform a **White Balance (WB)**. If you are using a **CC-HDMI-CD1** Turn the dial on the back of the camera until you have highlighted menu line "P" and press the button on the right. If you are using the **CC-CMC-LCD10** press the up/down button on the wired remote until you have highlighted menu line "P" and press the right button on the wired remote.

4) To capture images please do the following:

a) Insert SD/USB card into SD card slot with the gold SD traces facing you and facing down.

b) Watch for green LED on the back of camera to flash momentarily. This means that the card has been recognized by the camera and is now ready to take images. If you are using the **CC-CMC-LCD10** the monitor will say SD Ready in the lower right hand corner of the screen.

c) If you are using the **CC-HDMI-CD1** you can now capture images using the wired trigger or the onscreen menu. If you are using the **CC-CMC-LCD10** you can now capture images using the wired remote control or onscreen menu.

d) To remove the SD/USB card after capturing images **PUSH** to eject the card from the slot. **DO NOT PULL THE CARD OUT**.

e) Take the card to any computer with a SD or USB port and download your images using Windows Explorer.

5) **If your camera is not capturing images perform the following:**

a) The card may have been corrupted. To fix this: insert it into a computer via the SD or USB port and reformat the card using Windows. Right click on the card a click Format. Select FAT32 as your file format. Click Format.

b) The DCIM file may have been accidentally deleted. If this happens the camera will not be able to capture images. To regenerate the file: Remove the SD/USB card from the camera. Disconnect the power from the camera. Insert the SD/USB card while the power is disconnected. Reconnect the power to the camera. This will regenerate the DCIM file and you will be able to capture images.

c) The camera cannot capture more images while an image is being written to the card. If the light is flashing wait until it stops to capture another image.

d) The camera will not capture image is the card is not inserted properly. Eject the card by pushing on it to eject it from the camera. Reinsert the card by pushing on it until you feel a click.

How to parfocal (Cycle through zoom range without losing focus) and setup your microscope for use.

1. Set approximate working distance.

2. Adjust ocular ports or adjustable eyepiece to zero (0).

3. Set zoom knobs to highest magnification setting (4.5 or 5.0 in most cases).

4. Look through the eyepieces and focus the system using focus knobs located on the focus mount.

5. Adjust zoom knobs located on the body of the microscope to the lowest magnification (.67 or .8 in most cases).

6. Look through the eyepieces and adjust ocular ports or eyepieces until focus is satisfactory

7. Set up is complete.

*For microscopes with trinocular ports and cameras adjust the camera focus by turning or raising the coupler at lowest magnification until focus is satisfactory.

Microscopy Terminology and Optical Relationships

1.**Magnification:** The number of times by which the size of the image exceeds the original object. For instance if a sample is being viewed at 10x it is being viewed ten times greater than what the naked human eye is capable of. Magnification can be changed by using more powerful eyepieces and/or video couplers. **Objective lenses will change the magnification but they will also change working distance.**

2.**Working distance:** The distance between the objective and the sample, while in focus. Only objective lenses can increase and decrease working distance. For instance a 0.5x will increase working distance and a 1.0x objective lens will decrease working distance.

3.**Field of View:** The area of the sample being viewed through the eyepieces or on the monitor. **Increasing magnification will decrease field of view and vice versa. This is always true.**

4.**Parfocality:** The ability to remain in focus throughout the entire magnification range. To make your microscope parfocal follow the microscope set up instructions. Most microscopes are capable of being parfocal.

5.**Depth of Field:** The distance in front of and beyond the subject that appears to be in focus. For instance a large depth of field means that you will be able to have more vertical area in focus. A small depth of filed means you will have less vertical area in focus. Microscopes typically have a very small depth of field.