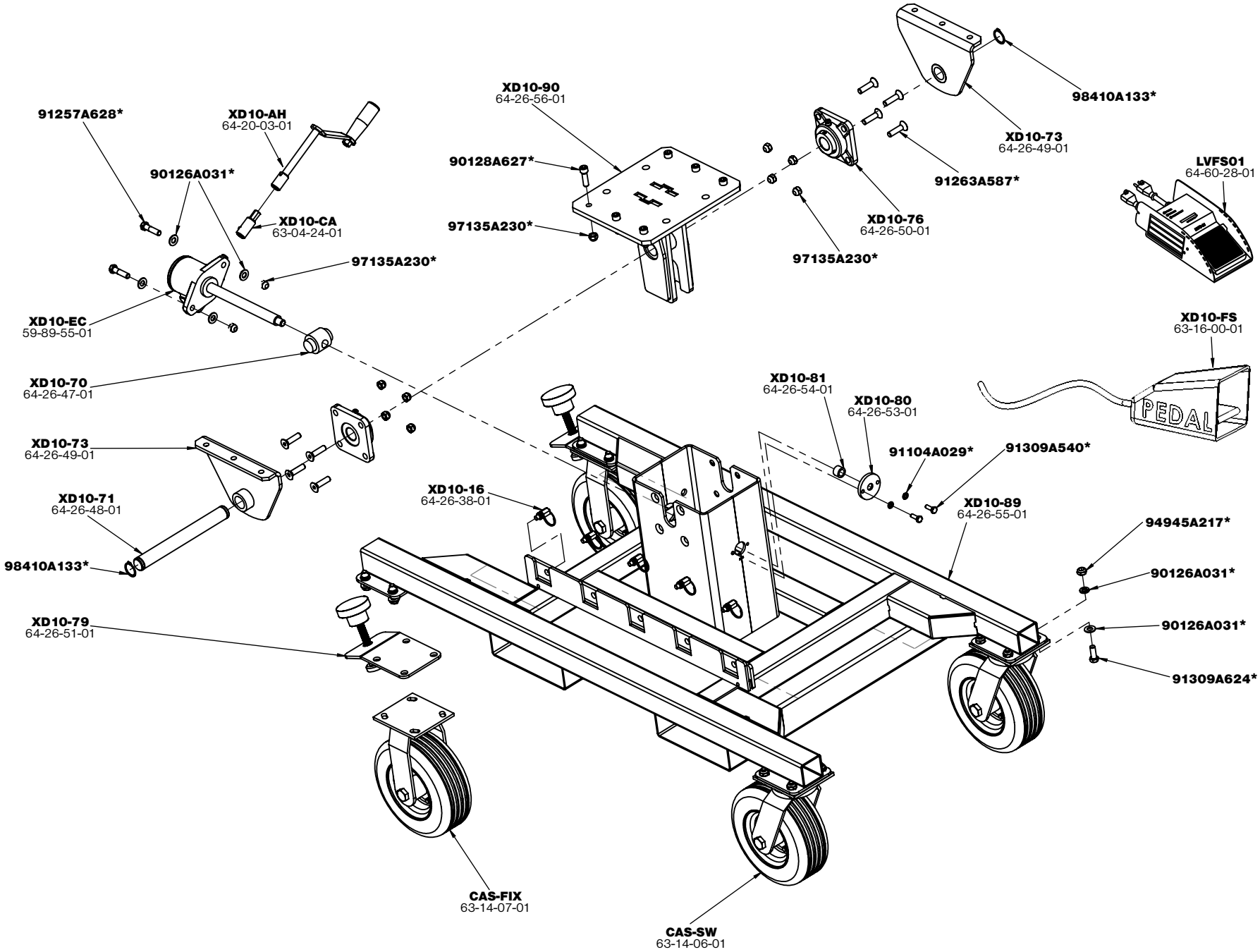

***McMaster Carr Part Number**

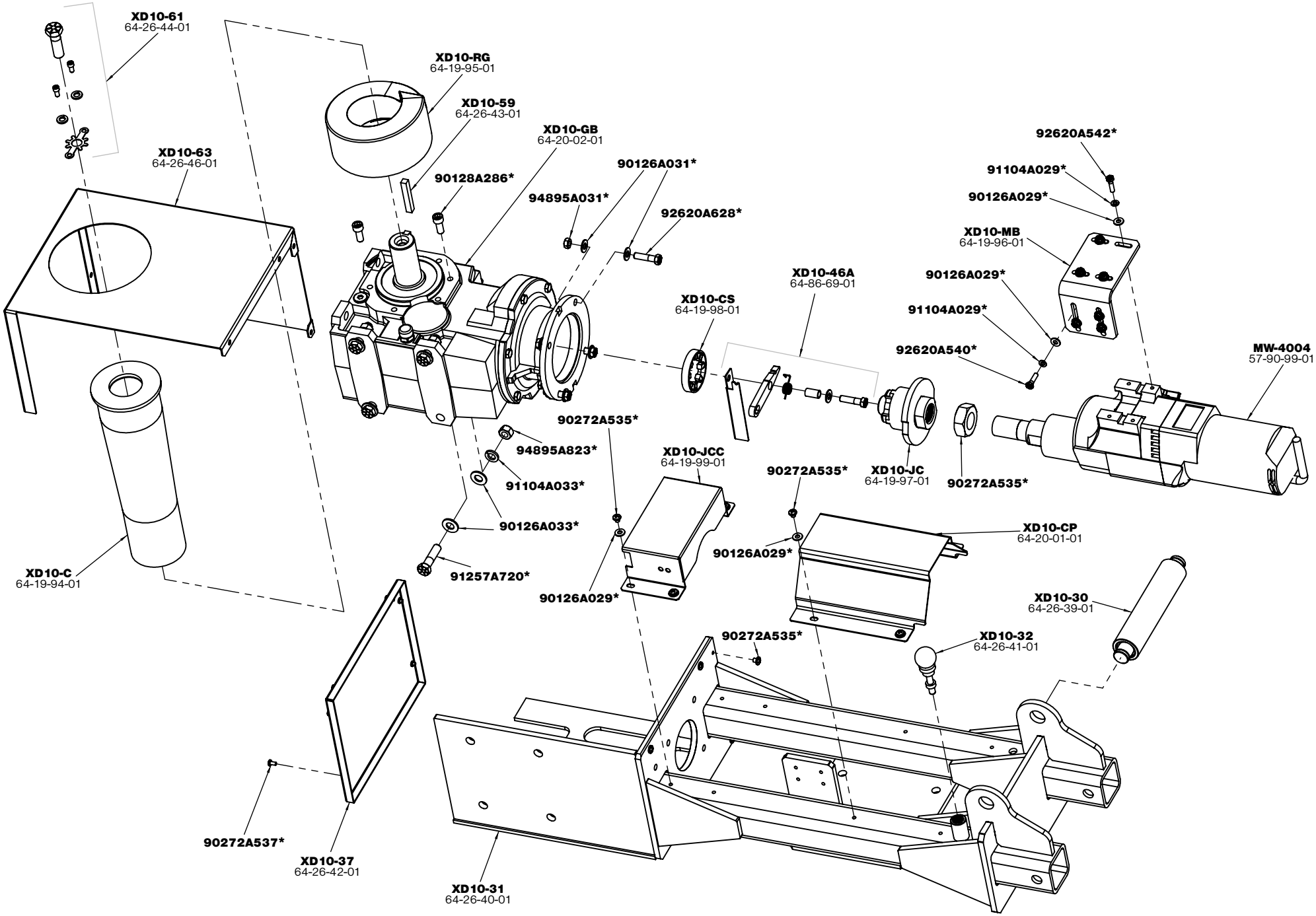

*McMaster Carr Part Number

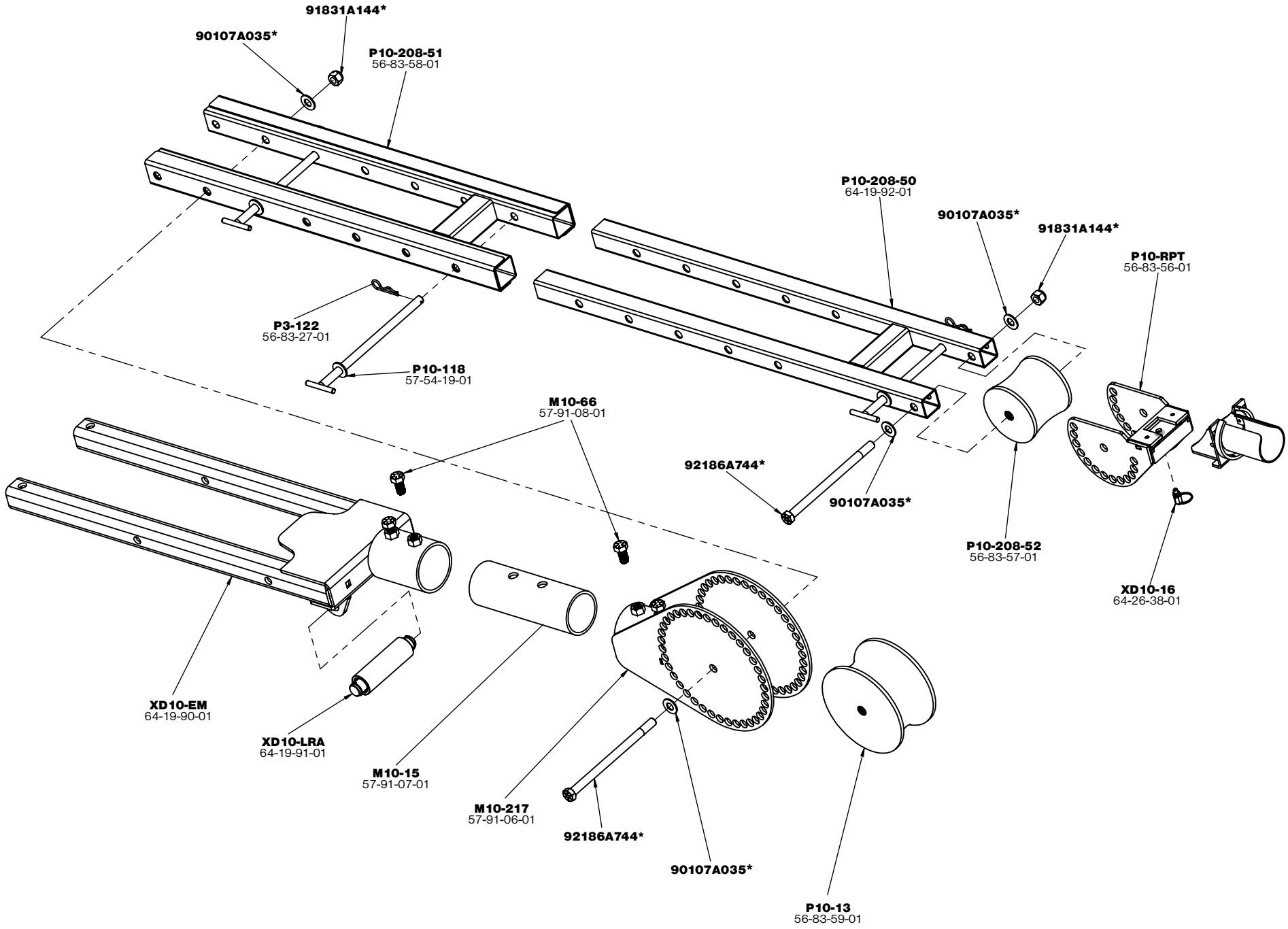

***McMaster Carr Part Number**

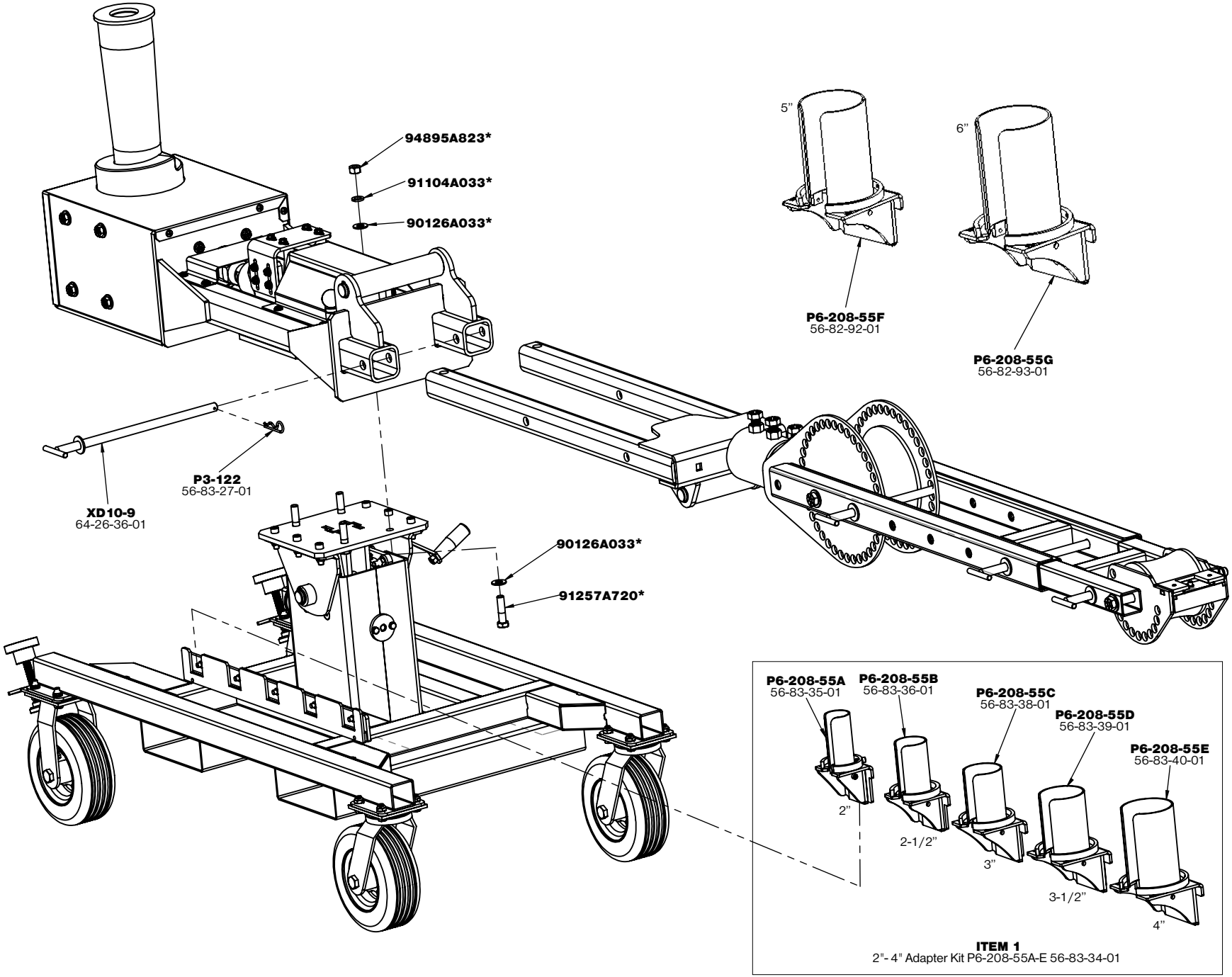

***McMaster Carr Part Number**