Top View

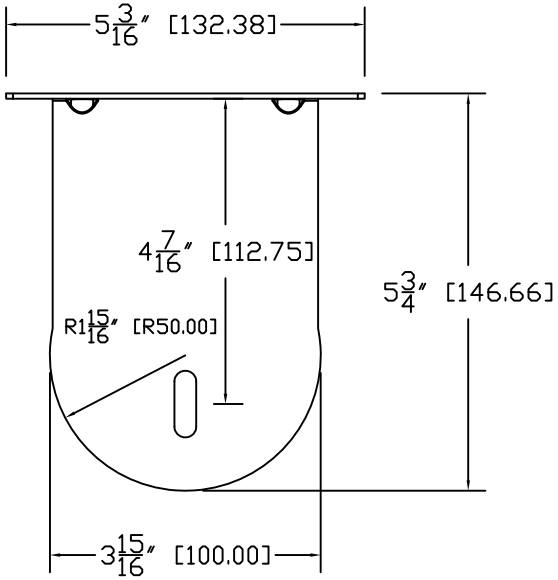

Iso View

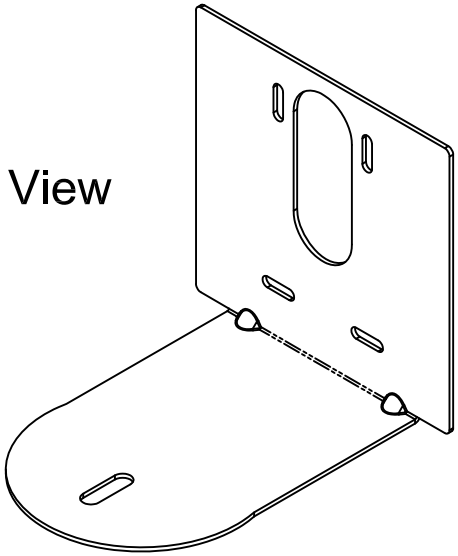

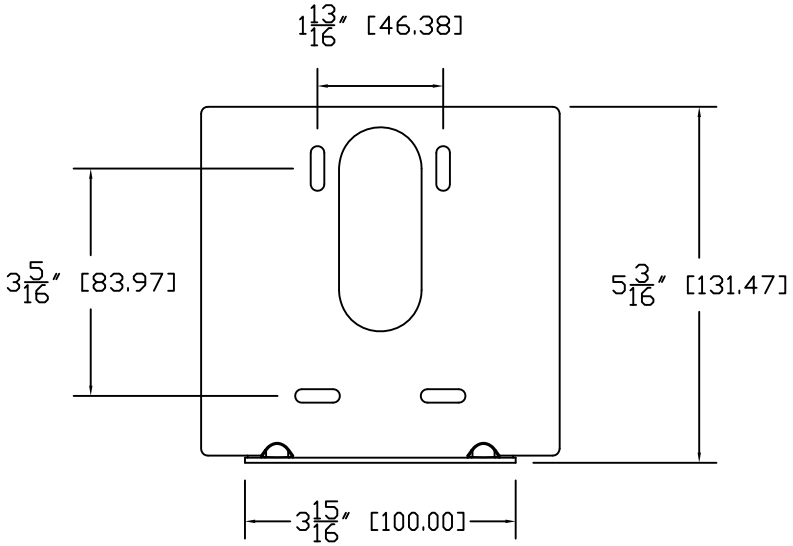

Front View

Side View

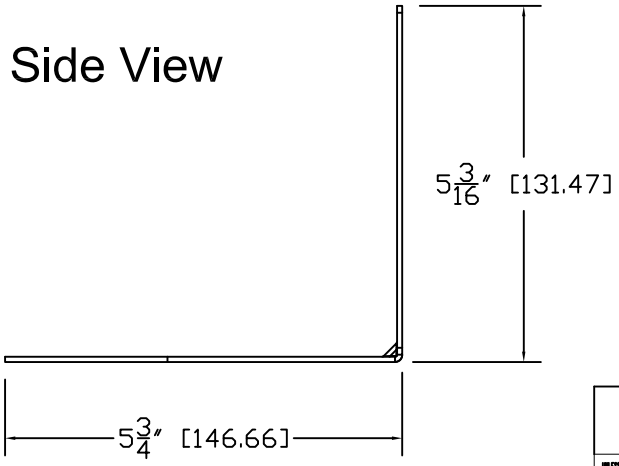

GENERAL NOTES:

DIMENSIONS ARE IN INCHES [mm] UNLESS OTHERWISE NOTED. DO NOT DISTRIBUTE WITHOUT EXPRESS WRITTEN PERMISSION OF VADDIO. DUE TO OUR CONTINUING EFFORTS TO ENHANCE OUR PRODUCTS, WE RESERVE THE RIGHT TO CHANGE SPECIFICATIONS WITHOUT PRIOR NOTICE OR OBLIGATION.

vaddio

UNLESS OTHERWISE NOTED:
DIMENSIONAL LIMITS APPLY AFTER FINISH
MACHINED SURFACES 125
EDGES & FILLETS R .015/.015
FRACTIONS ± 1/32
ANGLES ± 1°
DEC. .X ±1 .015
.XX ±1 .005
.XXX ±1 .000

THIS DRAWING, INCLUDING ALL SUBJECT MATTERS INDICATED THEREON OR DERIVED THEREFROM, CONTAINS PROPRIETARY INFORMATION AND IS THE EXPRESS PROPERTY OF VADDIO. All Rights Reserved-Copyright 2006

TITLE: 535-2000-207 for Canon VC-C50i			
DRAWN: JAS	CHECKED: RAR	APPROVED: RAR	DATE: 02/22/07
MATERIAL: CRS SHT .075 14 GA. 1018			SIZE:
FINISH: PAINT, BLACK FLAT POWDER COAT, PCCO 886-394			SCALE: 1:1
TITLE: Thin Profile Wall Mount for WallVIEW 501 PTZ	SHEET: 1-1	DRAWING NO.: 207	REV.: A