MAINTENANCE MANUAL

AFW/APF SERIES

CONTENTS

1. INTRODUCTION

2. SPECIFICATIONS
- 2.1 SYSTEM BLOCK DIAGRAM
- 2.2 PHYSICAL LAYOUT OF ELECTRICAL CONNECTION
- 2.3 GENERAL SPECIFICATIONS
- 2.4 INTERNAL SETTINGS AND CALIBRATION METHODS
- 2.5 FLOW CHART

3. TROUBLE SHOOTING
- 3.1 TROUBLE SHOOTING LOOP
- 3.2 PARTS AND COMPONENTS TROUBLE SHOOTING

4. ELECTRICAL CIRCUITRY
- 4.1 SCHEMATICS
- 4.2 PCB LAYOUT

5. BILL OF MATERIAL

6. APPENDIX

DECEMBER 2003 REV 4

Specifications and Function Subject to Change without Notice

1. INTRODUCTION

The AFW/APF series are designed and programmed according to the OIML R-76 Class III requirements.

These scales are sealed to prevent unauthorized access to internal parts. Ender users should be advised not to undertake any trouble shooting except those listed on the operation manual.

This maintenance manual contains of certain information that may result in fraudulent use. Do not release any part of this manual to any end users or un-authorized persons.

The internal mini jumper should be so set to prevent un-authorized settings or alternations.

Should a load cell has been replaced, make sure that the protection devices are properly set.

After servicing, it is necessary to go through all tests and procedures to ensure the scale meets all the meteorological and approval requirements.

Here are some features of the AFW/APF series

1. Designed to meet OIML-R76 class III requirements.
2. 1/3000 external resolution
3. Zero indicator
4. Tare indicator
5. Negative value indicator
6. Subtractive tare function.
7. Power on zero function.
8. Manual zero function.
9. Auto power Saving Function
10. WTN LCD display, 25.4mm height (5 1/2 digits)
11. Low battery warning signal.
12. 2 types of Calibration
13. Mini jumper to prevent end-user calibration
14. Optional EL backlights
15. Accumulation function available
16. Built-in rechargeable battery operated
17. Overload protection
18. Battery operating time: 200 hours plus after charged

2. SPECIFICATION

2.1 SYSTEM BLOCK DIAGRAM

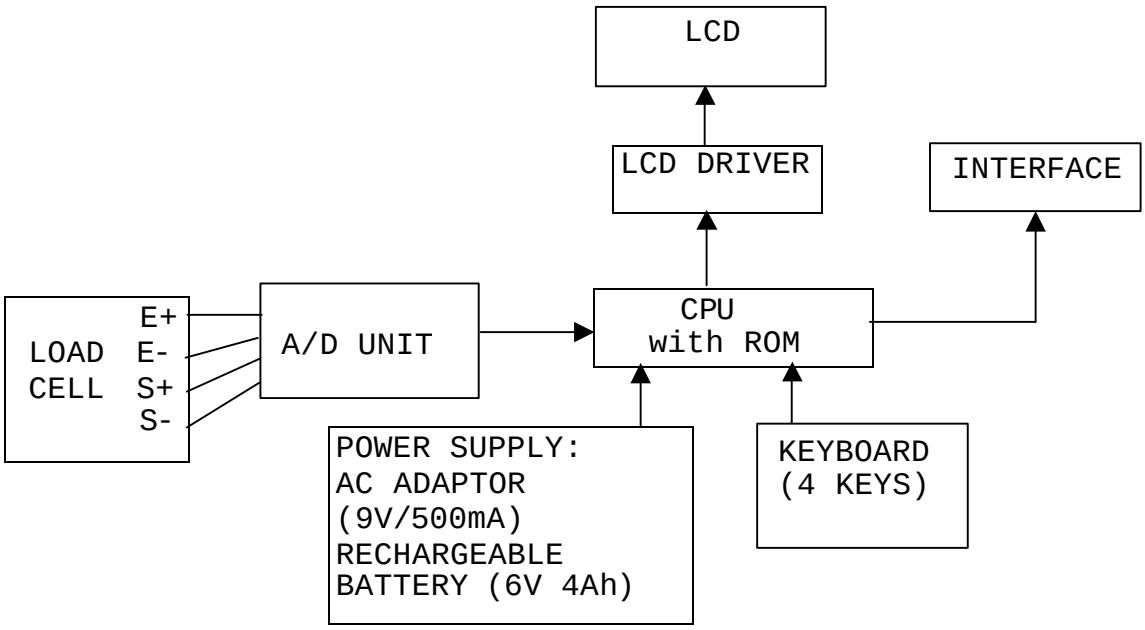

Description:
When an article is placed on the platter, the load of the article is applied to the load cell inside the scale.

The resistance to the excitation current in the strain gauge will then changed and the analog output signal varies.

It is amplified and digitized continuously by the A/D converter into a digital signal. Subsequently, the resulting count is processed and managed by the CPU. The CPU refers to the instructions from the keyboard, and then conveys the output data to LCD driver, which formats the data into readout on the display panels.

2.2 PHYSICAL LAYOUT OF ELECTRICAL CONNECTION

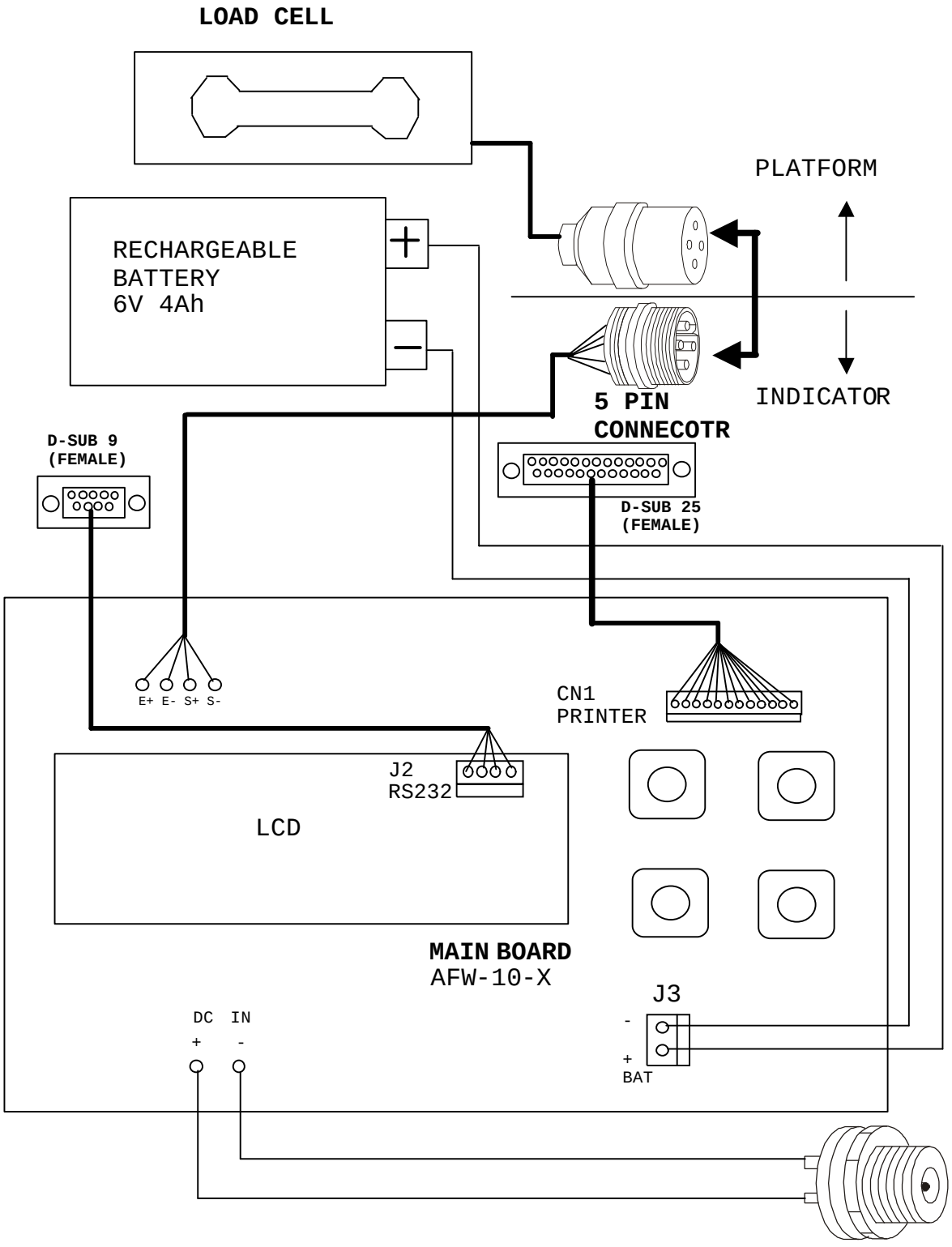

2.2.1 CONNECTION BETWEEN INDICATOR AND PLATFORM(5 PIN ROUND CONNECTOR)

PIN ASSIGNMENT

INDICATOR

PIN #1	E+
PIN #2	E-
PIN #3	S+
PIN #4	S-
PIN #5	GND

PLATFORM

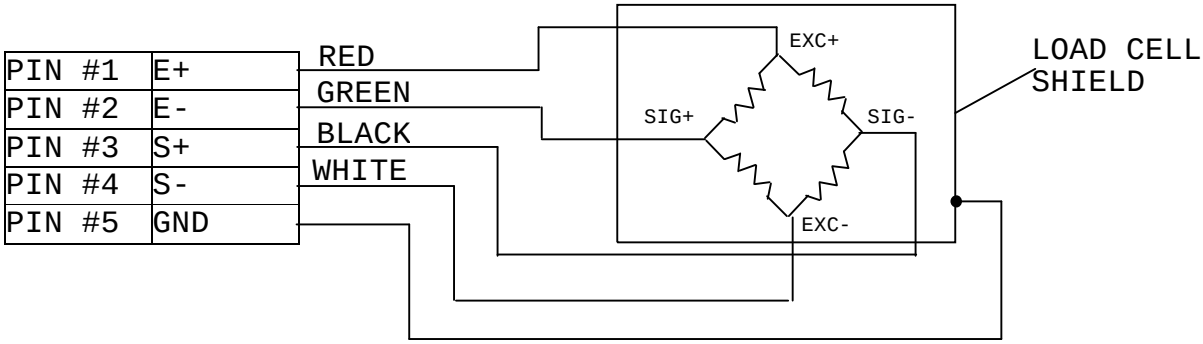

2.2.2 CONNECTION OF RS-232 BETWEEN INDICATOR AND PC(9PIN D-SUB)

PIN ASSIGNMENT

INDICATOR(9PIN D-SUB,FEMALE)

PIN #1	DCD
PIN #2	TXD
PIN #3	RXD
PIN #4	DTR
PIN #5	GND
PIN #6	DSR
PIN #7	RTS
PIN #8	CTS
PIN #9	NC

PC(9PIN D-SUB,MALE)

PIN #1	DCD
PIN #2	TXD
PIN #3	RXD
PIN #4	DTR
PIN #5	GND
PIN #6	DSR
PIN #7	RTS
PIN #8	CTS
PIN #9	NC

** RTS & CTS has been shorted internally.

BAUD RATE ¡ 9600
DATA BIT ¡ 8
PARITY BIT ¡ N(NONE)
STOP BIT ¡ 1
CODE ¡ ASCII

2.3 GENERAL SPECIFICATION

2.3.1 Overall View

AFW/APF SERIES

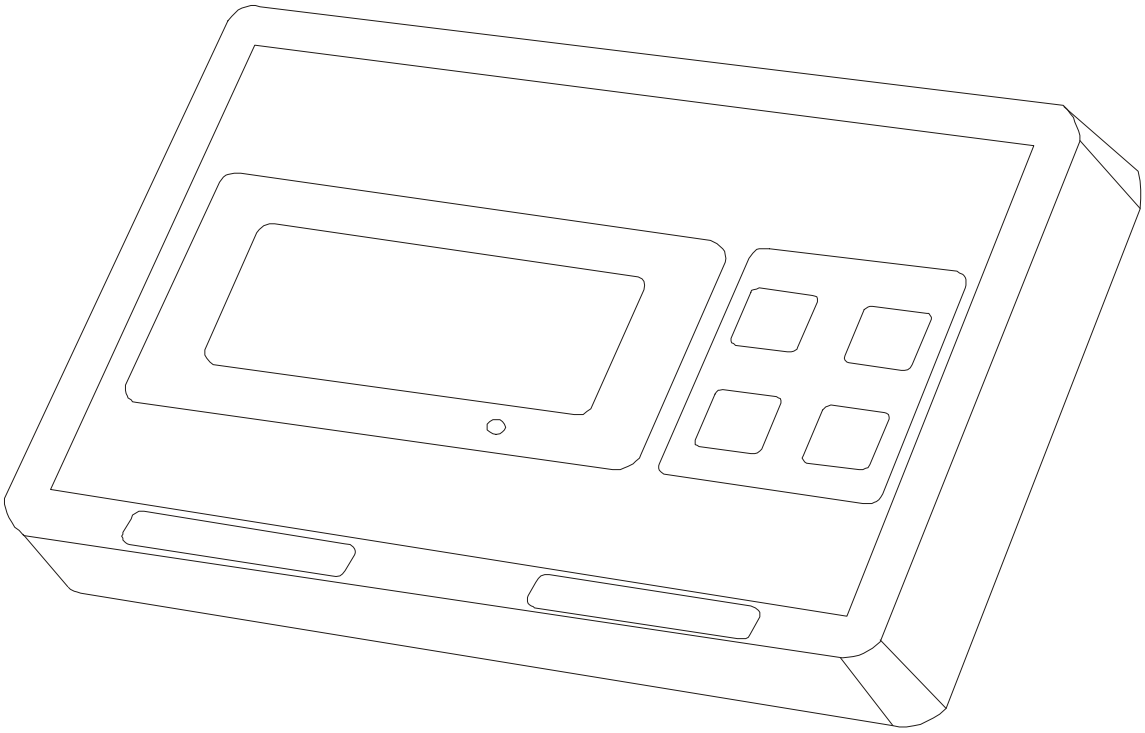

2.3.2 Overall Dimension:

250(W) x 160(H) x 100 (D)mm

2.3.3 Model Specifications

Model No.	Capacity (Max)	Division (e)		Platform
		OIML	Non-OIML	
AFW-B30	30kg	0.01kg	0.005kg	Aluminum Alloy with Stainless Steel Cover 330 x 450mm
AFW-B60	60kg	0.02kg	0.01kg	
AFW-B150	150kg	0.05kg	0.02kg	
AFW-F60	60kg	0.02kg	0.01kg	Aluminum Alloy with Stainless Steel Cover 425 x 525mm
AFW-F150	150kg	0.05kg	0.02kg	
AFW-F300	300kg	0.1kg	0.05kg	
APF-60	60kg	0.02kg	0.01kg	Aluminum Alloy with Stainless Steel Cover 425 x 525mm
APF-150	150kg	0.05kg	0.02kg	
APF-300	300kg	0.1kg	0.05kg	
AFW/APF indicator	User Define	1/3000	1/30000	User Define
Class	III			
Maximum Tare Range	OIML= 1/3 Max ¡ e; Non-OIML= Full Range			
Power on Zero Range	¡10%			
Manual Zero Range	¡2%			
Minimum Load	20e			
Operation Environment	0°~40°C (32°~104°F), Non-condensed. R.H.¡ 85%			
Power Consumption	0.1W			

2.3.4 Main Components Used

Microprocessors: SM8958
Crystal Oscillator: 11.0592MHz
Display Device: WTN Liquid Crystal Display

2.3.5 Analog Specification

Input sensitivity: 0.96mV/V~1.8mV/V VS. Full Capacity
Zero Range Adjustment: ¡ 2% of rated capacity
Zero Balance Range: ¡10% of rate capacity
Load Cell Excitation Voltage: DV5V
A/D Conversion Speed: 10 times/second
Internal Resolution: 160000

2.4 INTERNAL SETTINGS AND CALIBRATION METHODS

The AFW/APF indicator is designed to have no preset capacity and division, but for user to define. Depends on the requirement and thepurpose of the indicator is operating under,the resolution can be set anywhere from 1/3000 to 1/30000.

When **oiml** mode is selected and application is legal for trade, the overall resolution will be limited to 1/3000 with extended display for reference. When **norm** mode is selected and application is not legal for trade, the overall resolutioncan be set to a maximum of 1/30000. The indicator also can be set to have dual intervals when parameter is input.

TO SET TYPE (Select between OIML and non-OIML application)

a. Indicator is off
b. Press and hold **TARE**, then press **ON/ZERO**
c. Indicator displays **F.1**
d. Press **TARE** until indicator displays **F.3**
e. Press **MODE** to enter
f. Indicator displays **TYPE**
g. Press **ON/ZERO** to select operating type between **oiml** or **norm** for non-OIML
h. Press **MODE** to confirm

TO SET WEIGHING UNIT

i. After **TYPE** is selected, indicator will display **unit**
j. Press **ON/ZERO** to select the weighing units of kg, g, lb/kg, lb/g
   -To enable the avoirdupois units, press**MODE** when the lb/kg or lb/g sign appears.
   -To disable the avoirdupois units, press**MODE** when the kg or g sign appears.

TO SET DECIMAL POINT (For capacity and division readings)

k. After **unit** is selected, indicator will display **dp**
l. Press **ON/ZERO** to select number of decimal place. It can be set

from no decimal place up to 4 decimal place

m. When selected, press **MODE** to confirm

TO SET RATED CAPACITY AND DIVISION

(For Single interval, it means Max x e; for Dual Interval, it means Max_2 x e_2)

n. After decimal place is selected, indicator will display **CAP2**

o. Press **ON/ZERO** to enter and utilize **ON/ZERO** to increase value, **TARE** to move cursor to the next digit. Press and hold **TARE** key to backspace

p. The division must be selected to complete the setup before proceed to the next selection

q. Press **MODE** to confirm

TO SET DUAL INTERVAL (Max_1 x e_1)

r. After capacity and division is set, indicator will display **CAP1?** If dual interval does not require, press **MODE** to skip to **F4** to complete the internal setup. However, if dual interval is required, press **ON/ZERO** to enter and utilize **ON/ZERO** and **TARE** keys to set the capacity and division.

s. Press **MODE** to confirm and follow by **ON/ZERO** to quit

NOTE 1: You must reset capacity every time when you change the type between OIML and NORMAL.

NOTE 2: Each range must not exceed 1/3000 and 1/6000 for overall capacity under OIML mode and 1/30000 for NORMAL mode. For example, if **CAP2** sets as 3000kg (max2) x 1kg (e2), then **CAP1?** can set as 1500kg (max1) x 0.5kg (e1). So for OIML, max1/e1 & max2/e2 will not exceed 1/3000 and max2/e1 will not exceed 1/6000. For NORMAL, max2/e1 must not exceed 1/30000.

NOTE 3: When **OIML** type is selected, indicator will automatically regulate user to program the resolution within 1/3000.

NOTE 4: When setting up capacity, user must program all digits including division before press **MODE** to confirm.

CALIBRATION METHODS

a. Indicator is off and nothing is on the platform
b. Press and hold **MODE**, then **ON/ZERO**
c. Indicator displays **CAL._1**
d. Press **MODE** for **YES** and indicator will self calibrate zero point before proceed to the first point calibration
e. Indicator will show ¡Load XXXX¡, for which XXXX is 1/3 of the full capacity. Load the weight according to the display
f. Press **MODE** when display is flashing
g. Indicator displays **CAL._2**
h. Press **MODE** for **YES** or **ON/ZERO** to exit
i. Indicator will show ¡Load YYYY¡, for which YYYY is 2/3 of the full capacity. Load the mass according to the display
j. After weight is placed, press **MODE** when display is flashing to complete the calibration procedures

ODD WEIGHT CALIBRATION

a. Indicator is off
b. Press and hold **TARE**, then press **ON**
c. Indicator displays **F.1**
d. Press **MODE** to enter and indicator will show offset value
e. Press **MODE** again and indicator displays **CAL._1**
f. Press **ON/ZERO** and manually enter the weight that intends to calibrate by utilize **ON/ZERO** to increase and **TARE** to move cursor
g. When the weight is set, press **MODE** to begin the calibration and scale will self calibrate zero point before proceed to the first calibrate weight that was manually entered
h. Load the mass according to the display
i. Press **MODE** when display is flashing
j. Indicator displays **CAL._2**
k. Press **MODE** for **YES** or **ZERO** to exit
l. Repeat step **f** to set the weight of second calibration point.
m. Load the mass according to the display, the second point has to be higher than first point
n. Load the mass according to the display. Press **MODE** when display is flashing to complete the calibration procedures

Note: When manually enter the weight for calibration, the first point must not be less than 1/6 of the full capacity. The second point must not be less than the first point. But it is highly recommendsetting the second point at about 2/3 of the full capacity.

2.5 FLOW CHART
2.5.1 Auto Calibration (for end-user)

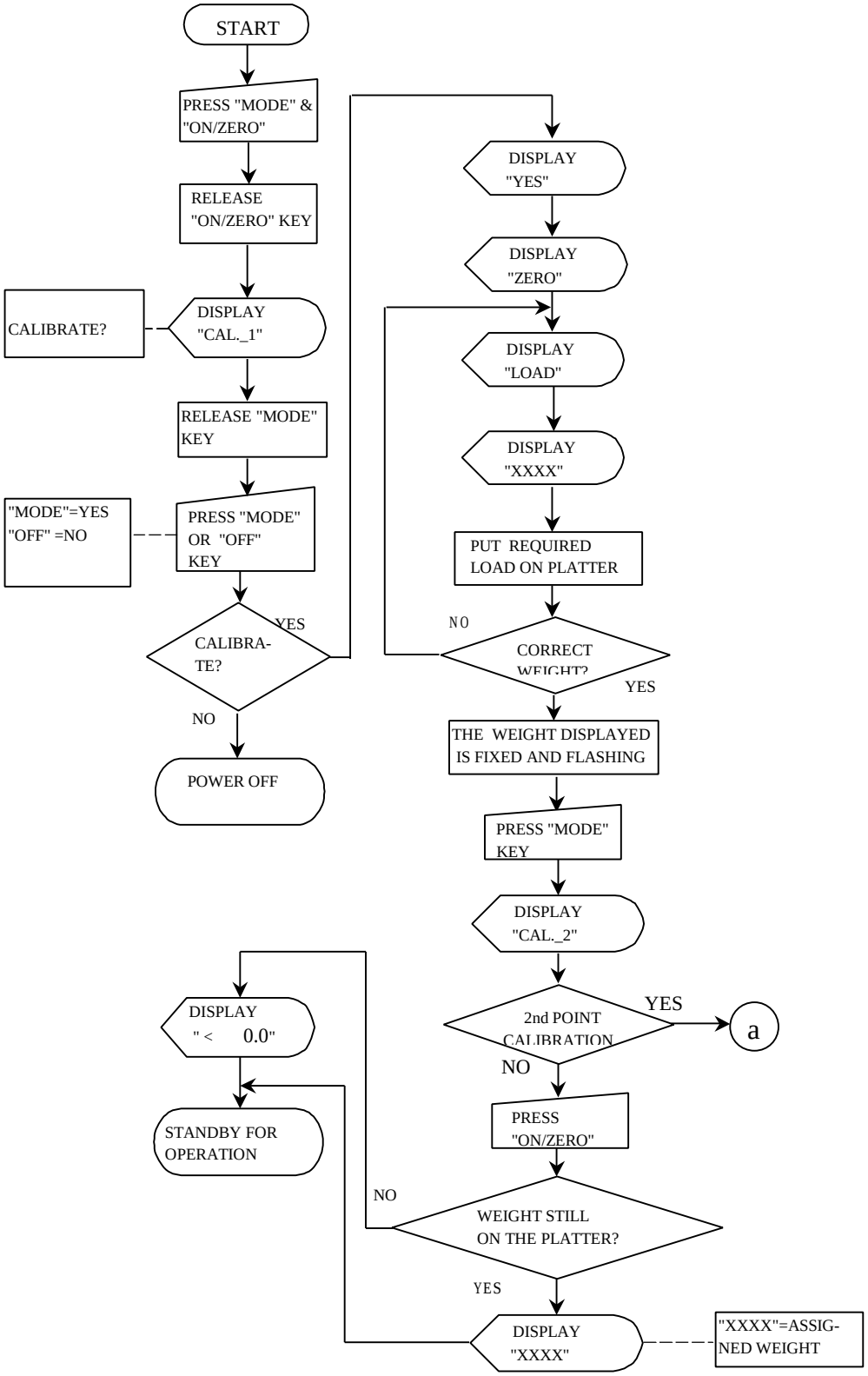

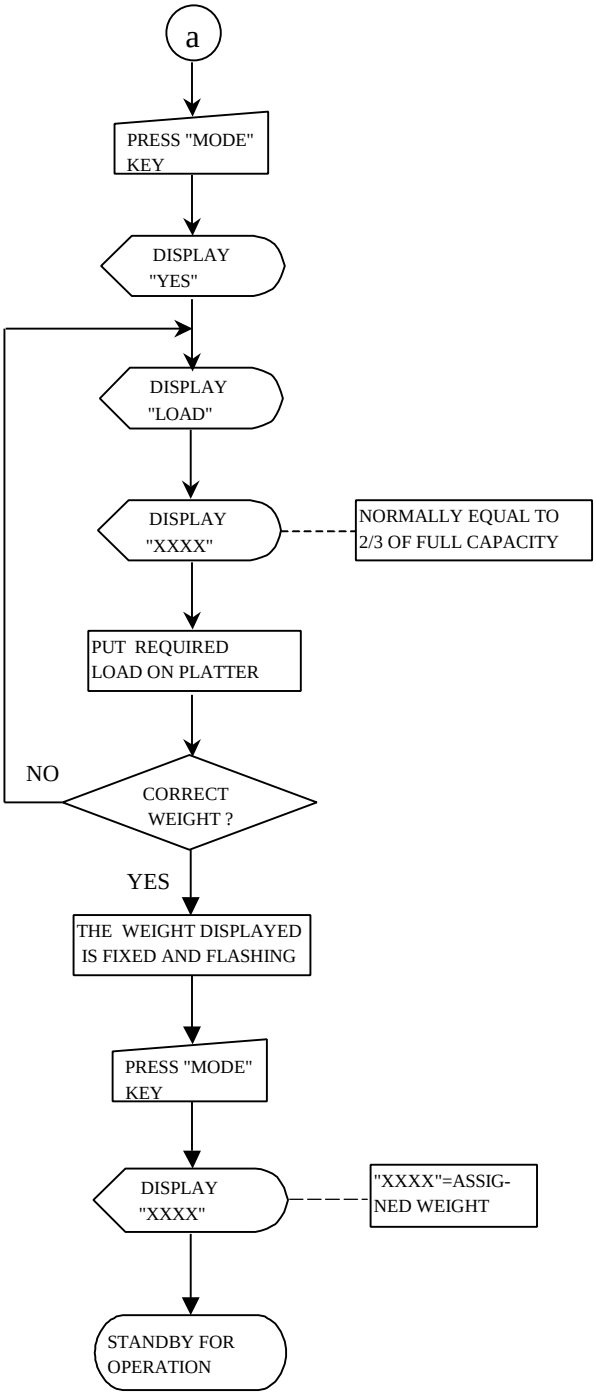
a
PRESS "MODE" KEY
DISPLAY "YES"
DISPLAY "LOAD"
DISPLAY "XXXX"
NORMALLY EQUAL TO 2/3 OF FULL CAPACITY
PUT REQUIRED LOAD ON PLATTER
NO
CORRECT WEIGHT ?
YES
THE WEIGHT DISPLAYED IS FIXED AND FLASHING
PRESS "MODE" KEY
DISPLAY "XXXX"
"XXXX"=ASSIG-NED WEIGHT
STANDBY FOR OPERATION

ODD WEIGHT CALIBRATION

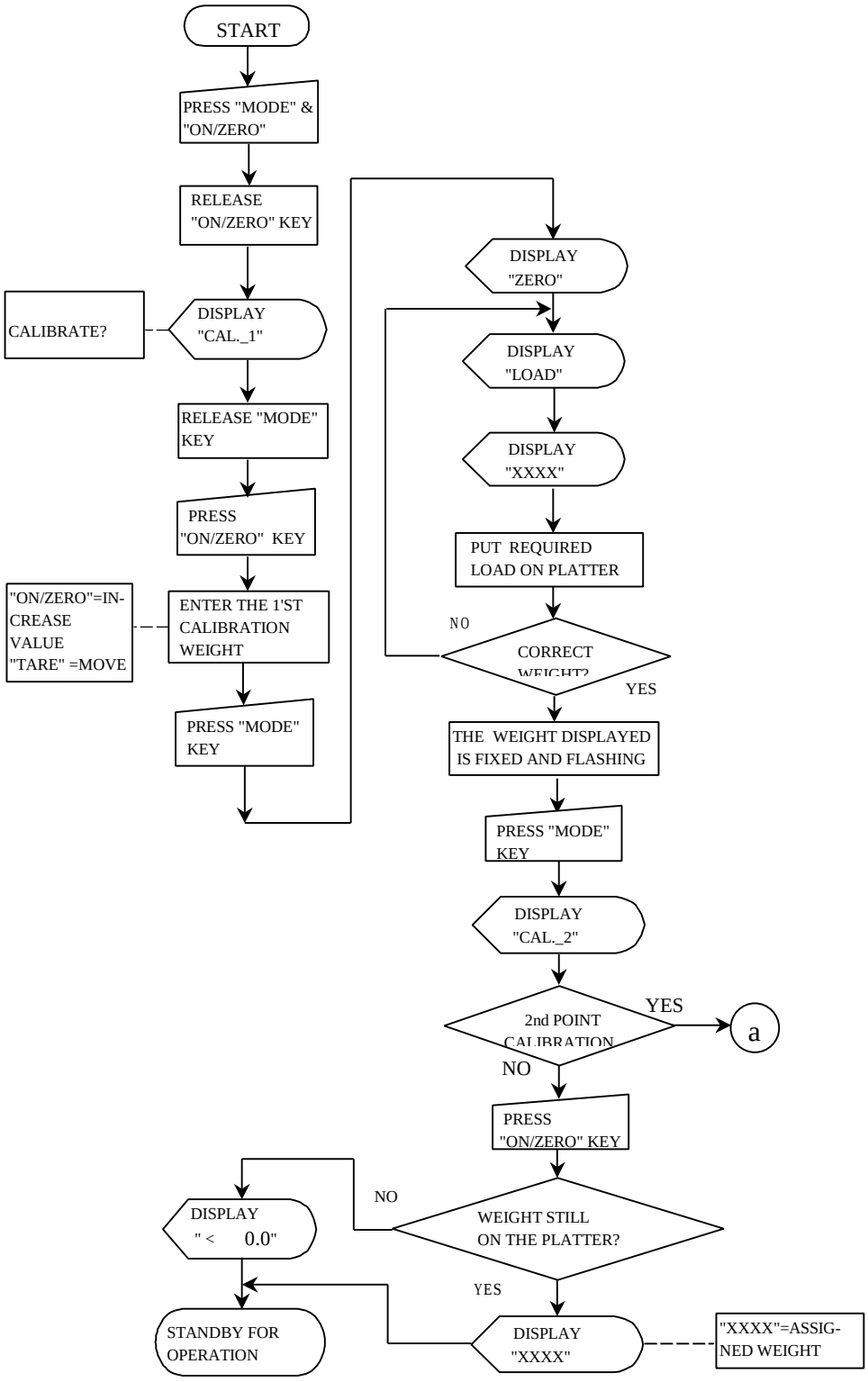

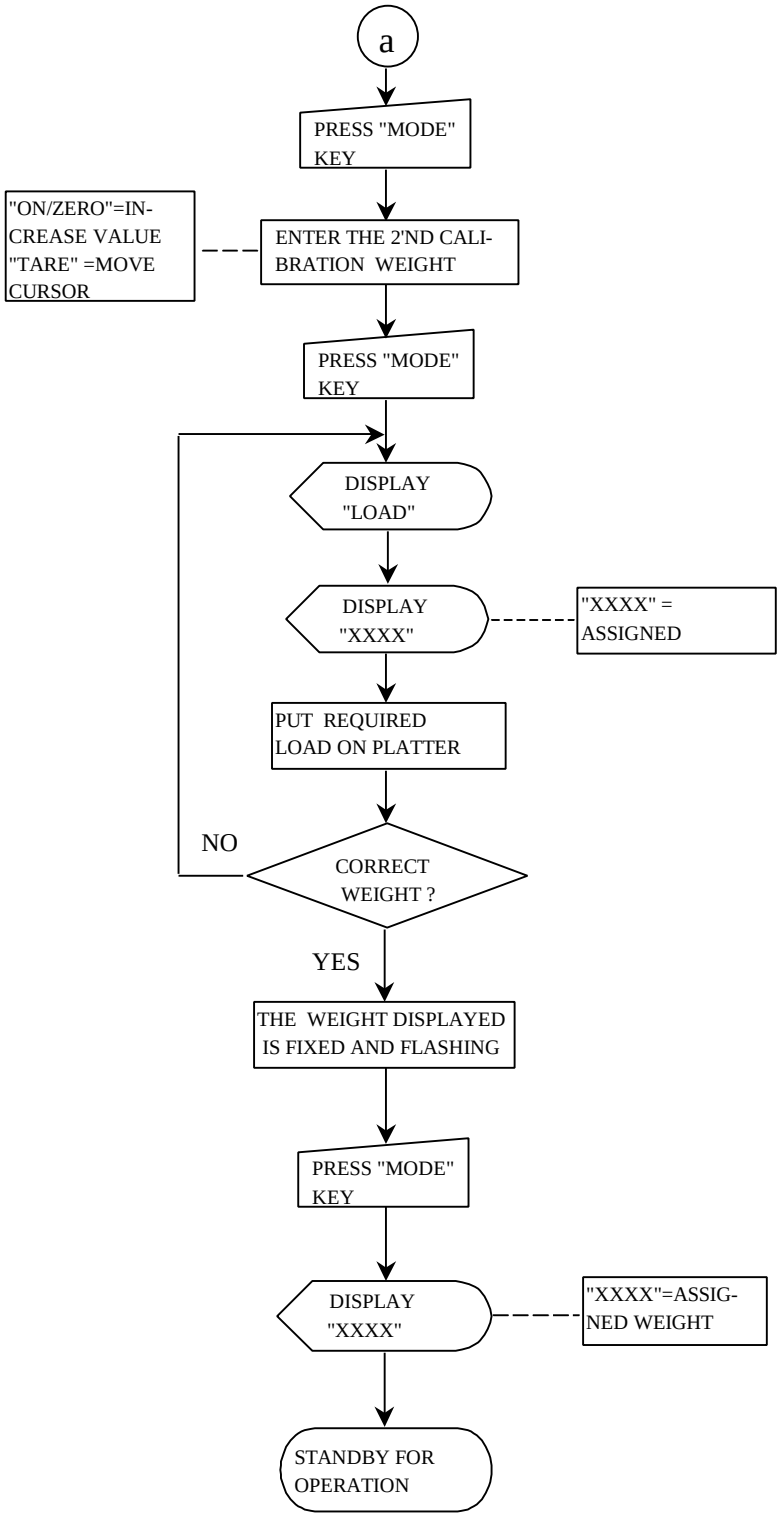
a
PRESS "MODE" KEY
"ON/ZERO"=IN-CREASE VALUE "TARE" =MOVE CURSOR
ENTER THE 2'ND CALI-BRATION WEIGHT
PRESS "MODE" KEY
DISPLAY "LOAD"
DISPLAY "XXXX"
"XXXX" = ASSIGNED
PUT REQUIRED LOAD ON PLATTER
NO
CORRECT WEIGHT ?
YES
THE WEIGHT DISPLAYED IS FIXED AND FLASHING
PRESS "MODE" KEY
DISPLAY "XXXX"
"XXXX"=ASSIG-NED WEIGHT
STANDBY FOR OPERATION

2.5.2 Function Test (for technicians only)

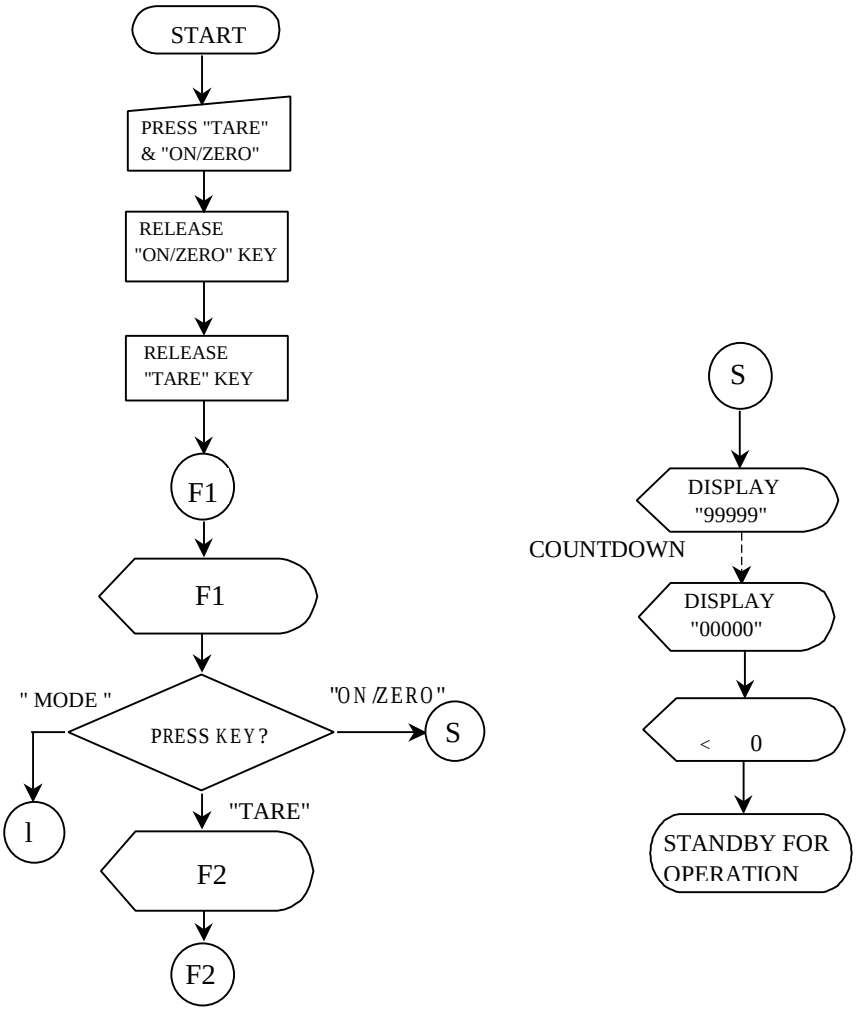

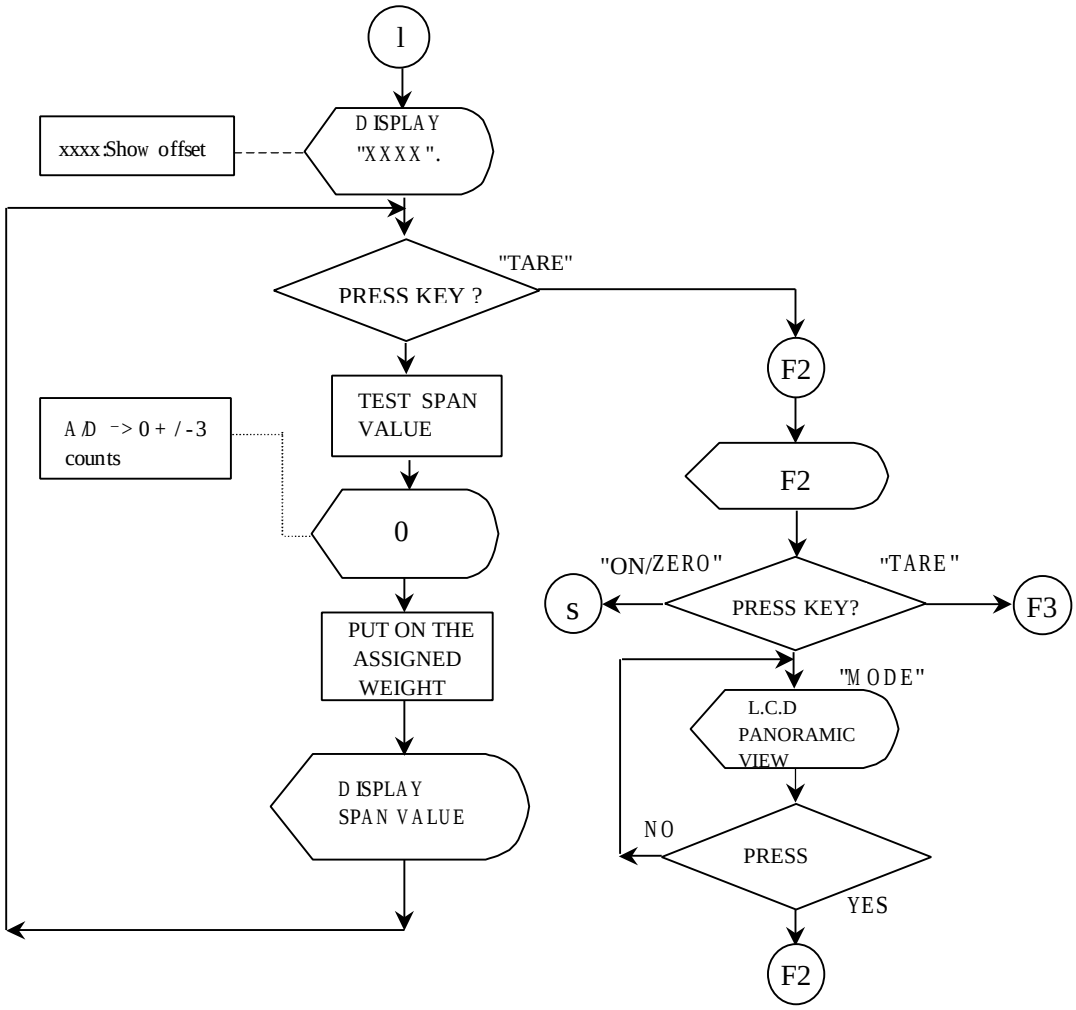
l
DISPLAY
"XXXX".
xxxx:Show offset
"TARE"
PRESS KEY ?
F2
TEST SPAN
VALUE
A/D -> 0 +/-3
counts
F2
0
"ON/ZERO"
"TARE"
S
PRESS KEY?
F3
PUT ON THE
ASSIGNED
WEIGHT
"MODE"
L.C.D
PANORAMIC
VIEW
DISPLAY
SPAN VALUE
NO
PRESS
YES
F2

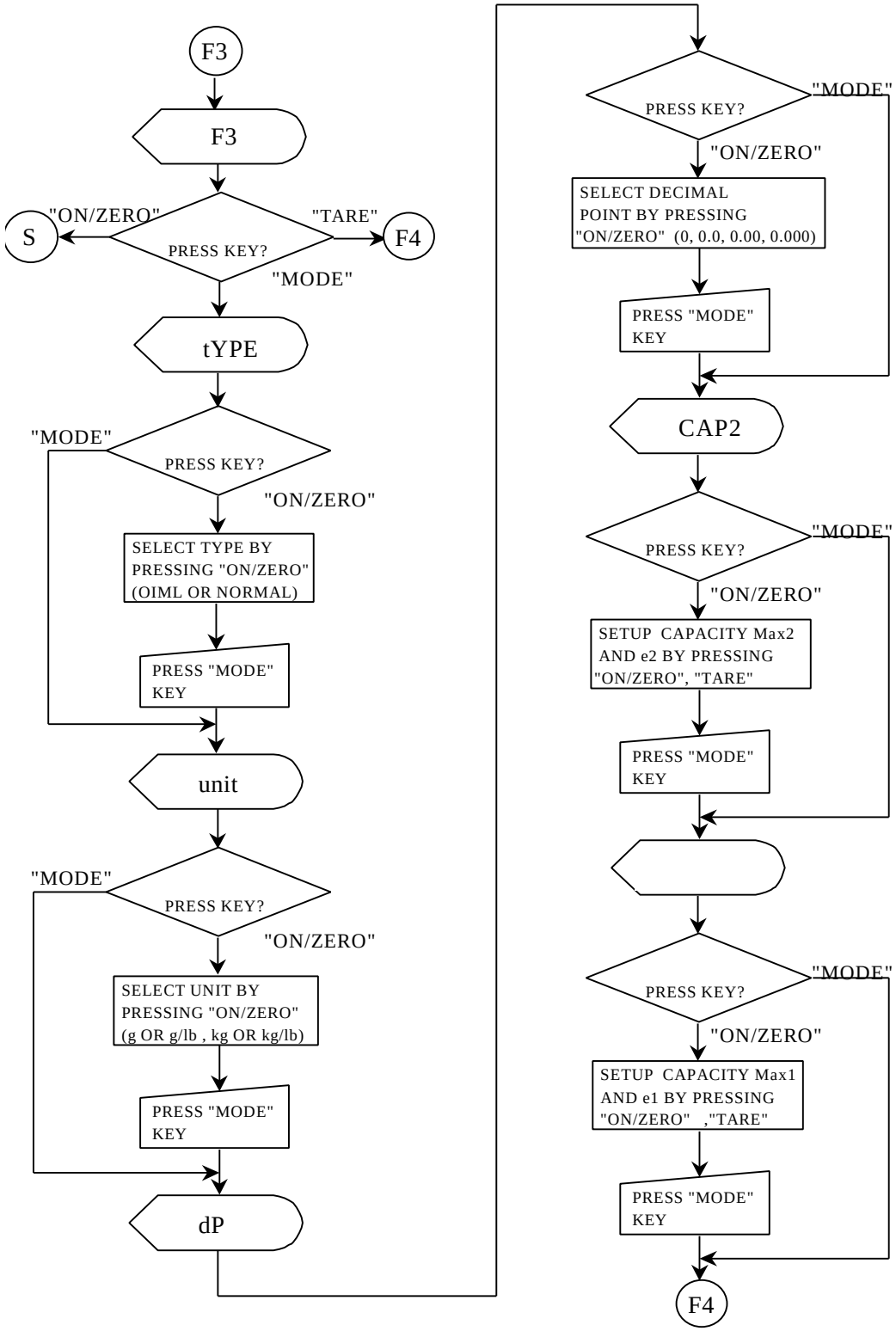
F3
F3
"ON/ZERO"
"TARE"
S
PRESS KEY?
F4
"MODE"
tYPE
"MODE"
PRESS KEY?
"ON/ZERO"
SELECT TYPE BY PRESSING "ON/ZERO" (OIML OR NORMAL)
PRESS "MODE" KEY
unit
"MODE"
PRESS KEY?
"ON/ZERO"
SELECT UNIT BY PRESSING "ON/ZERO" (g OR g/lb , kg OR kg/lb)
PRESS "MODE" KEY
dP
PRESS KEY?
"MODE"
"ON/ZERO"
SELECT DECIMAL POINT BY PRESSING "ON/ZERO" (0, 0.0, 0.00, 0.000)
PRESS "MODE" KEY
CAP2
PRESS KEY?
"MODE"
"ON/ZERO"
SETUP CAPACITY Max2 AND e2 BY PRESSING "ON/ZERO", "TARE"
PRESS "MODE" KEY
PRESS KEY?
"MODE"
"ON/ZERO"
SETUP CAPACITY Max1 AND e1 BY PRESSING "ON/ZERO" ,"TARE"
PRESS "MODE" KEY
F4

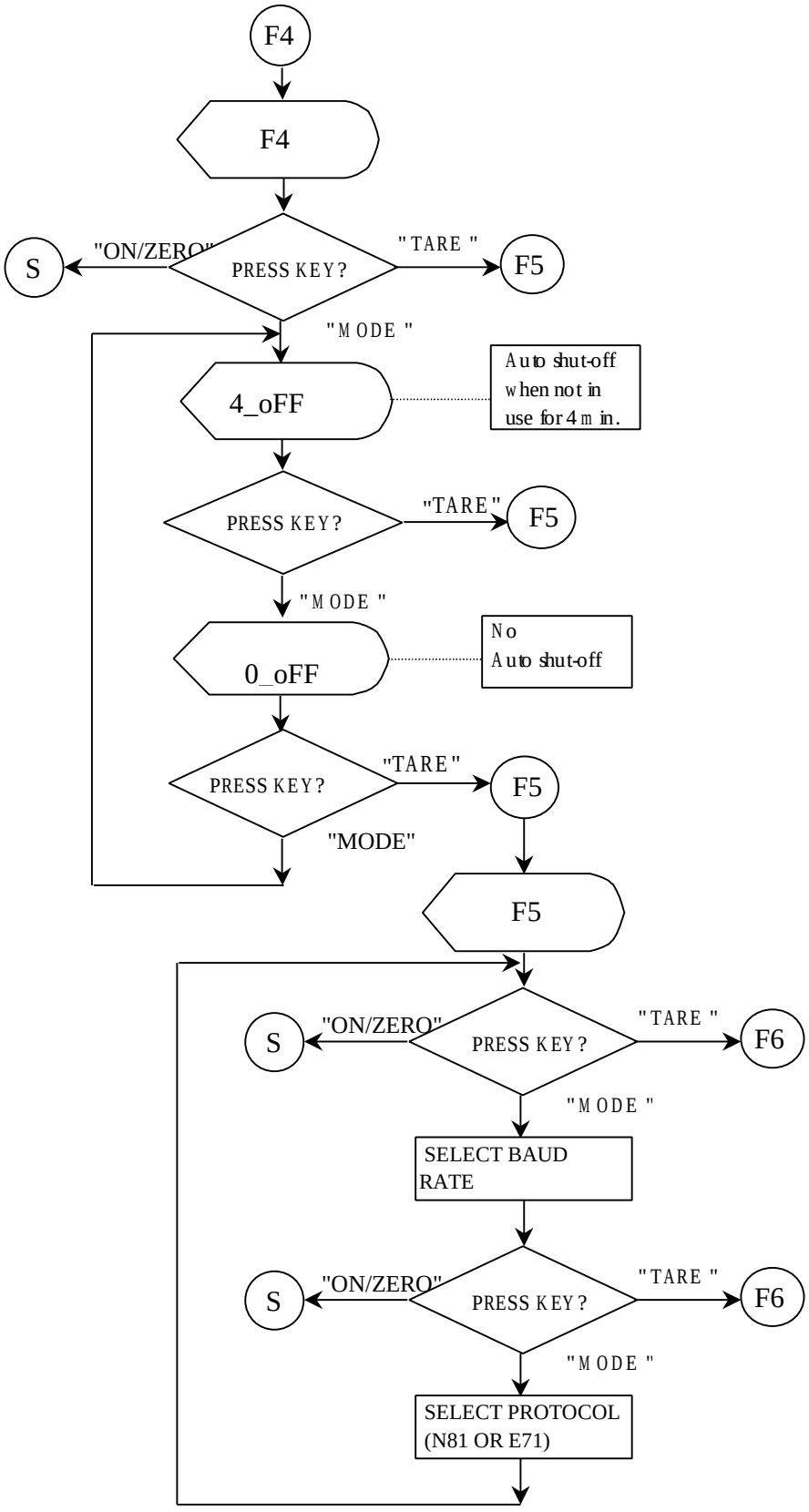
F4
F4
S
"ON/ZERO"
PRESS KEY?
"TARE "
F5
"MODE "
4_oFF
Auto shut-off when not in use for 4 min.
PRESS KEY?
"TARE"
F5
"MODE "
0_oFF
No Auto shut-off
PRESS KEY?
"TARE"
F5
"MODE"
F5
S
"ON/ZERO"
PRESS KEY?
"TARE "
F6
"MODE "
SELECT BAUD RATE
S
"ON/ZERO"
PRESS KEY?
"TARE "
F6
"MODE "
SELECT PROTOCOL (N81 OR E71)

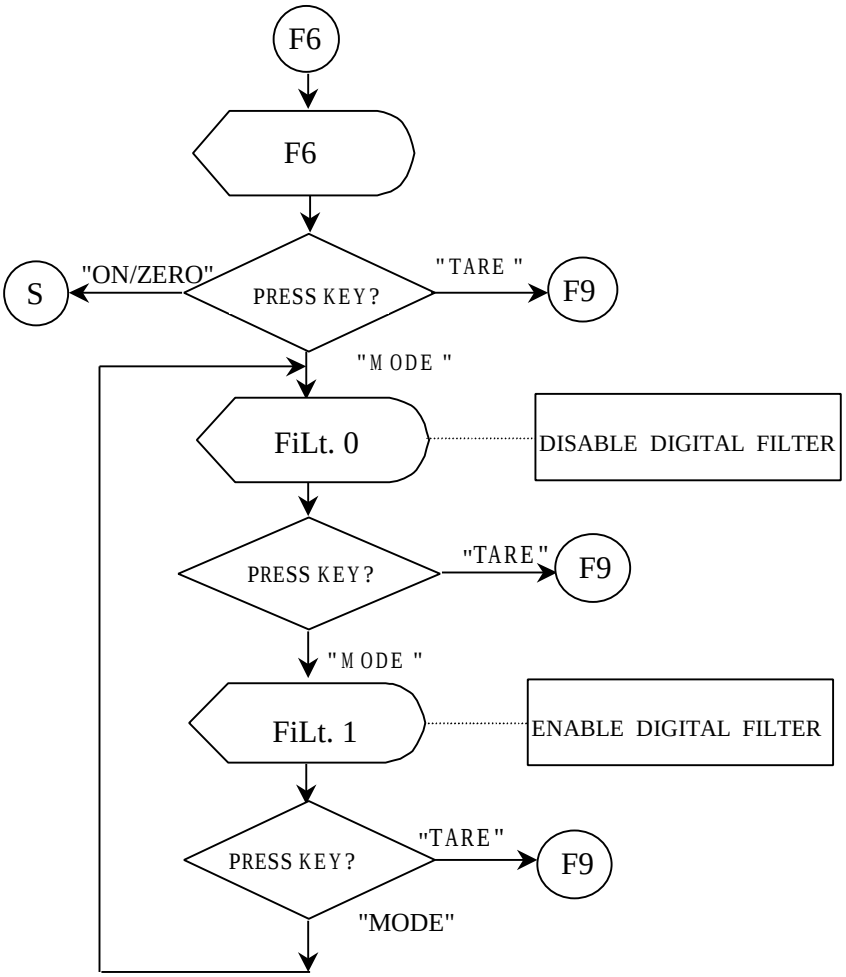
F6
F6
PRESS KEY?
"ON/ZERO"
S
"TARE "
F9
"MODE "
FiLt. 0
DISABLE DIGITAL FILTER
PRESS KEY?
"TARE"
F9
"MODE "
FiLt. 1
ENABLE DIGITAL FILTER
PRESS KEY?
"TARE"
F9
"MODE"

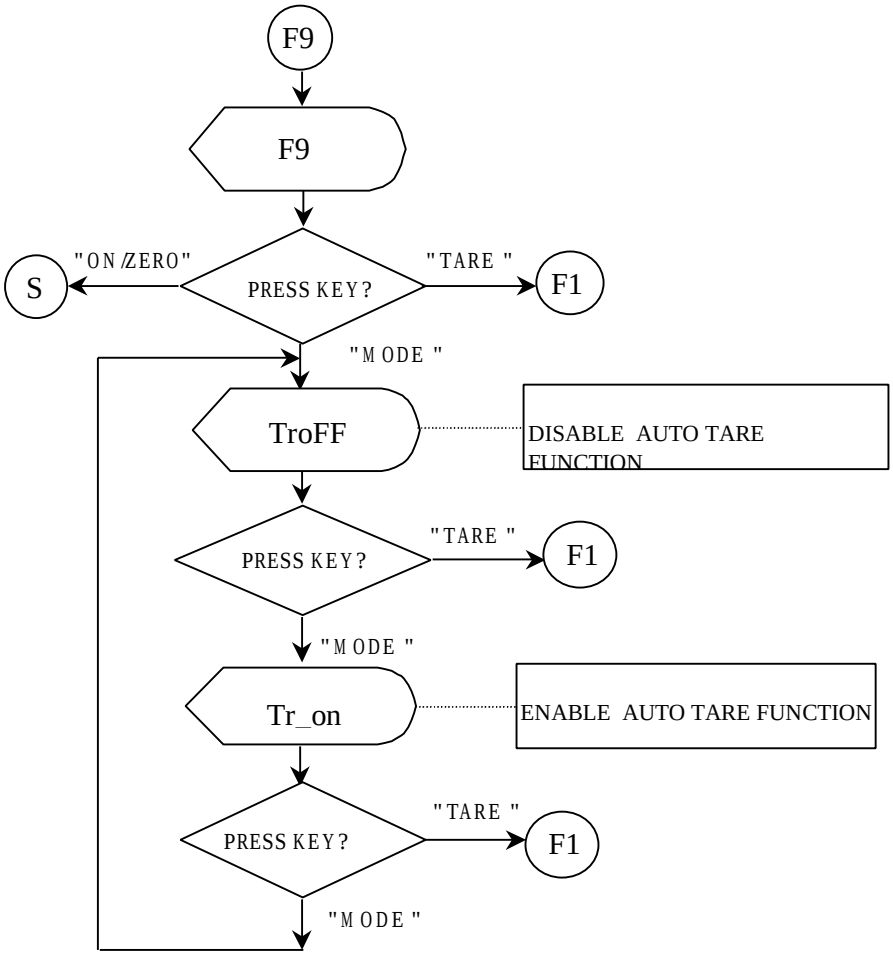
F9
F9
"ON/ZERO"
PRESS KEY?
"TARE "
S
F1
"MODE "
TroFF
DISABLE AUTO TARE FUNCTION
PRESS KEY?
"TARE "
F1
"MODE "
Tr_on
ENABLE AUTO TARE FUNCTION
PRESS KEY?
"TARE "
F1
"MODE "

3. TROUBLE SHOOTING

3.1 TROUBLE SHOOTING LOOP

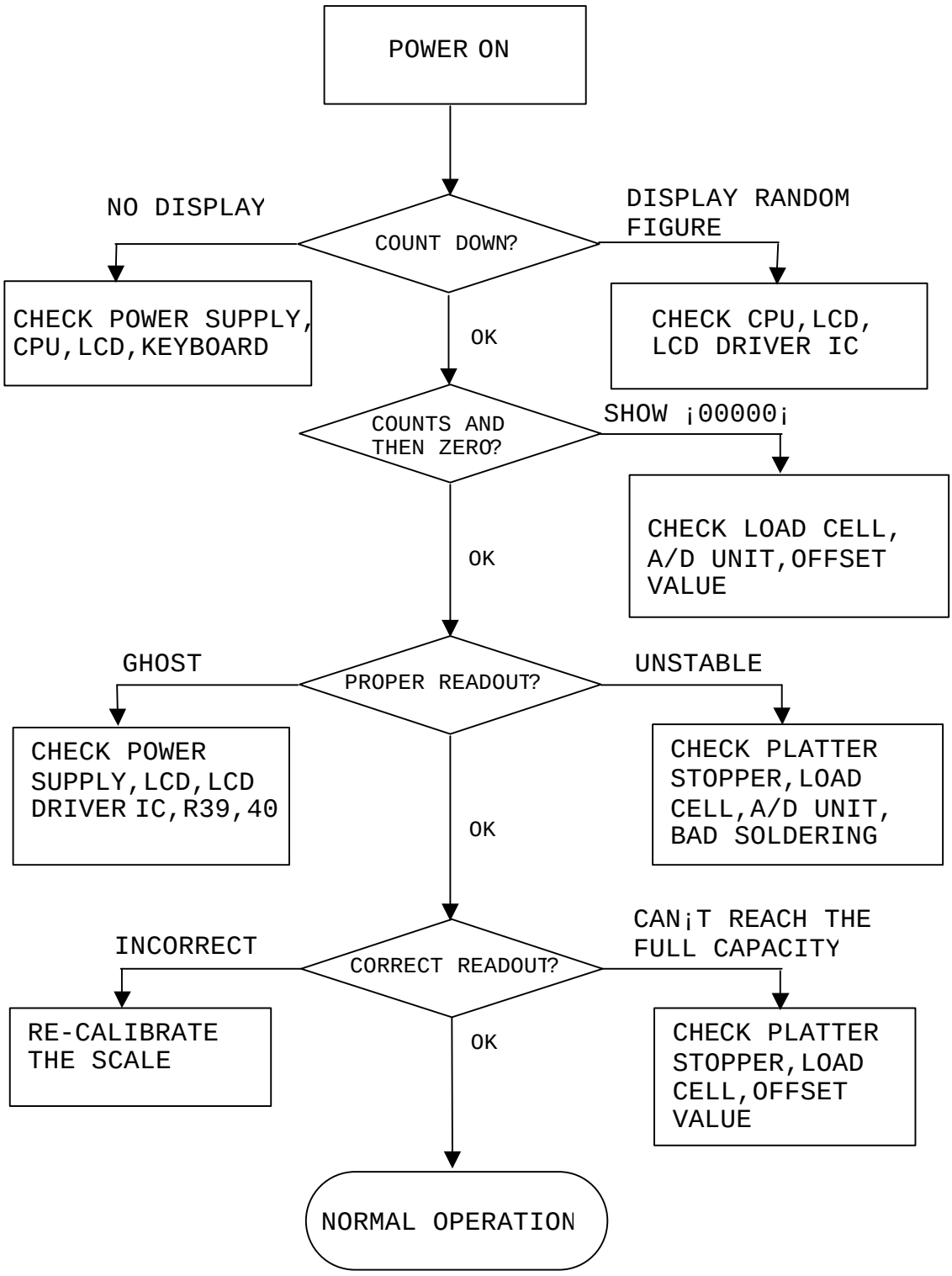

3.2 PARTS AND COMPONENTS TROUBLE SHOOTING

3.2.1 Power Supply Checking

3.2.1.1 Relevant parts:

Main Board (AFW-10-X)
Q4 (A1515)
Q6 (A733)
U11(AIC 1722-5.0)
Q1 (C1061)
Q2 (C945)
ZD1(ZENER 8.2V)
R20(1.2R 1/2W)
DC JACK
BATTERY(6V 4Ah)

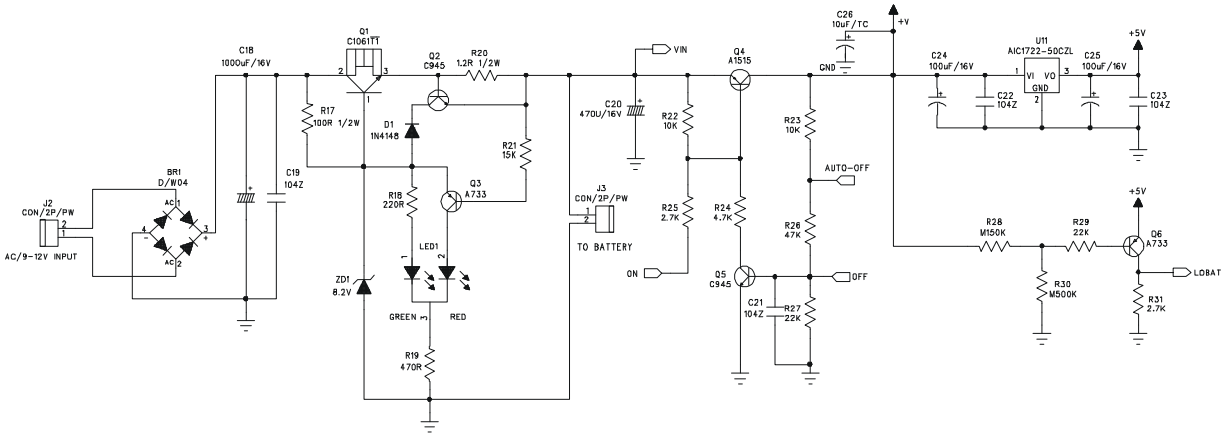

Description:

1) Power source: Rechargeable Battery 6V/4Ah or AC adaptor(9V, 500mA)

2) +5V power drives digital circuit system.
   U11 (AIC 1722-5.0) is a 5volts Voltage Regulator.

3) +5V power drives analog circuit system.
   U4 (AS2950A) is a 5volts Voltage Regulator.

4) Auto-off:
   If the scale is set with 4_oFF of power-saving function or under LO-BAT situation, after fixed time interval, CPU will release a low potential signal to draw Q5 down, then Q4 cuts off, scale will be shut down immediately.

5) Low Power Detection:
The Q6(A733) is designed to detect the power level. When battery power is less than 5.5V, the collector pole will become high potential, then CPU will instruct LCD display to show LO-BAT symbol.

3.2.1.2 Input voltage: 5.5V or higher
Check and recharge battery if voltage is less than 5.5V.

3.2.1.3 System voltage (Vcc): 5V +/- 10%
Check that the system voltage is within 5V +/- 10%
a) less than 4.5V, the CPU may not work properly.
b) more than 6V, ghost will appear on LCD.

3.2.2 Platter Stopper Checking
The platter device shall not touch anything around itself during operation. Check that the platter is not contacted with the upper (no load) and/or lower (with load) stopper.

3.2.3 LCD Display Checking

3.2.3.1 Check that it is soldered and connected properly between LCD and driver IC (PCF8576), driver IC (PCF8576) and CPU.

3.2.3.2 Check whether LCD is broken.

3.2.4 CPU Checking

3.2.4.1 Check that all pins are seated properly into the socket.

3.2.4.2 Check that the Crystal Oscillator works.

3.2.4.3 Check the RESET is normally low.

3.2.5 A/D Unit Checking

3.2.5.1 Check that the +5V powers are correctly fed to the A/D unit.

3.2.5.2 Check that the signal output of loadcell is normal.

3.2.5.3 Check OP. Amplifiers & A/D Converter (AD7705).

When no error is found with the above checking procedures, the trouble can be caused on the loadcell or the PCB itself. Replace a new one could be better to identify the defective.
In this way, the readout of weight would be varied because of the output voltage of loadcell and different span value, so recalibration is required after this replacement.

4. ELECTRICAL CIRCUITRY

4.1 SCHEMATICS

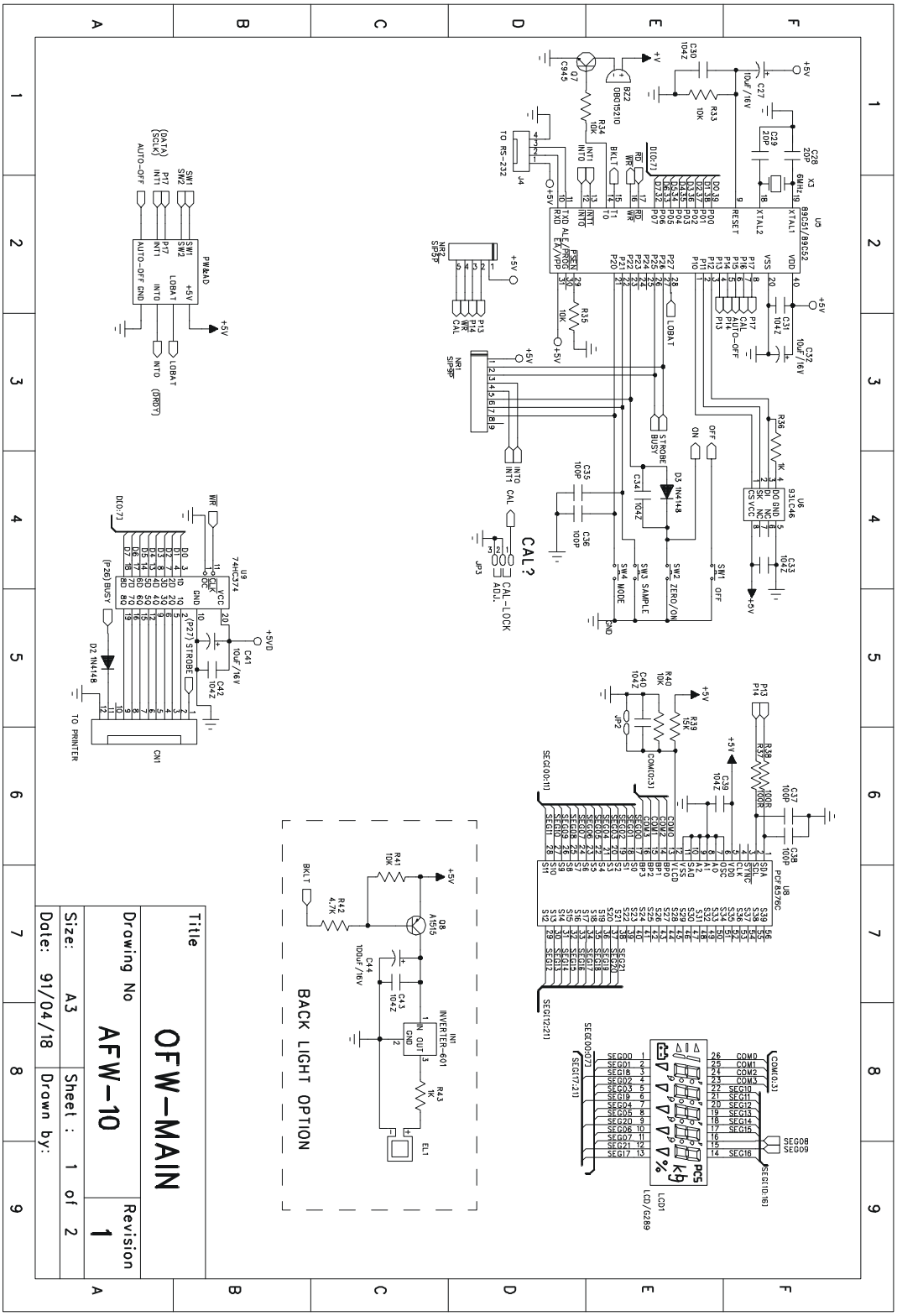

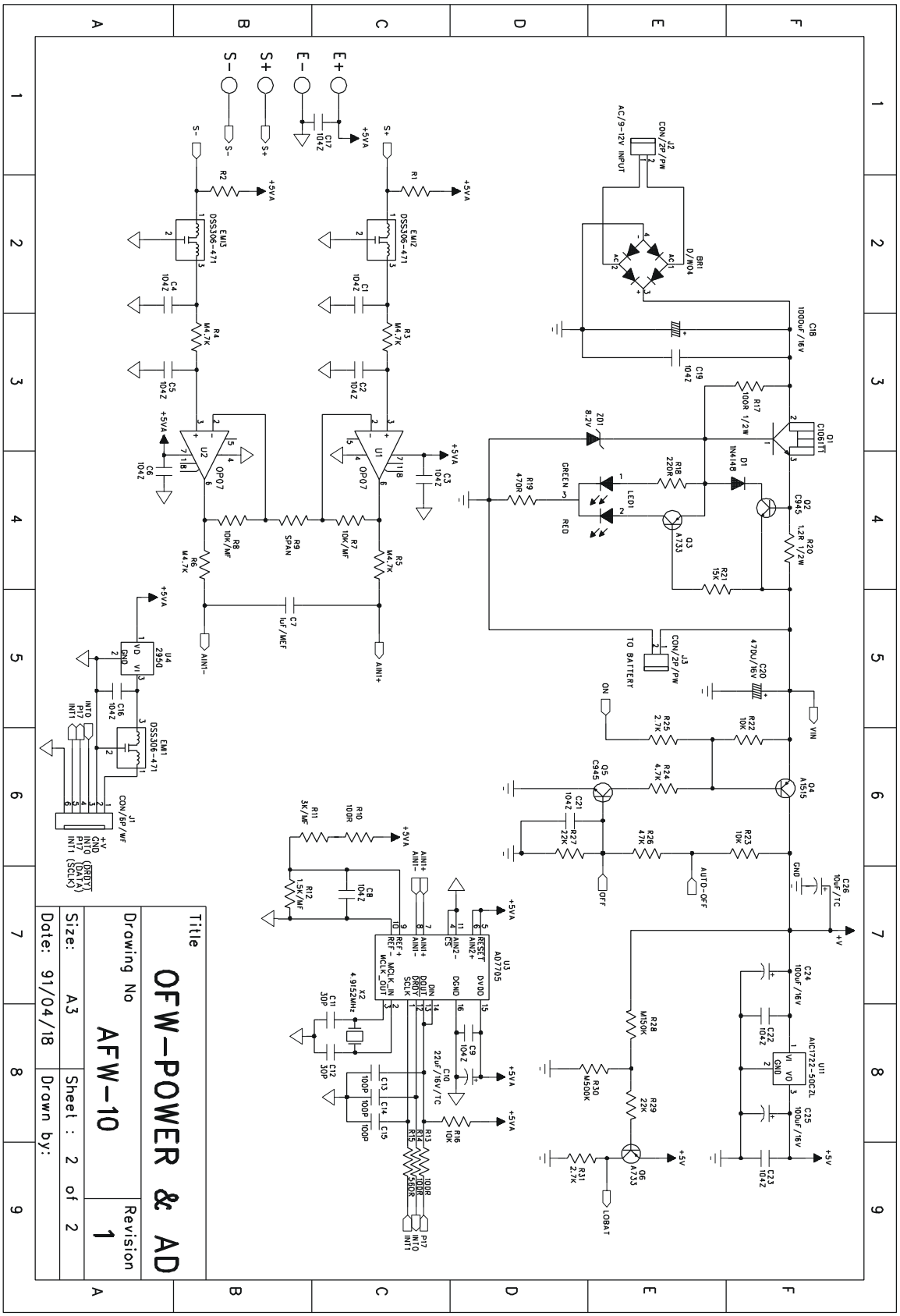
Title
OFW-POWER & AD
Drawing No
AFW-10
Revision
1
Size: A3
Sheet : 2 of 2
Date: 91/04/18
Drawn by:

4.2 PCB LAYOUT

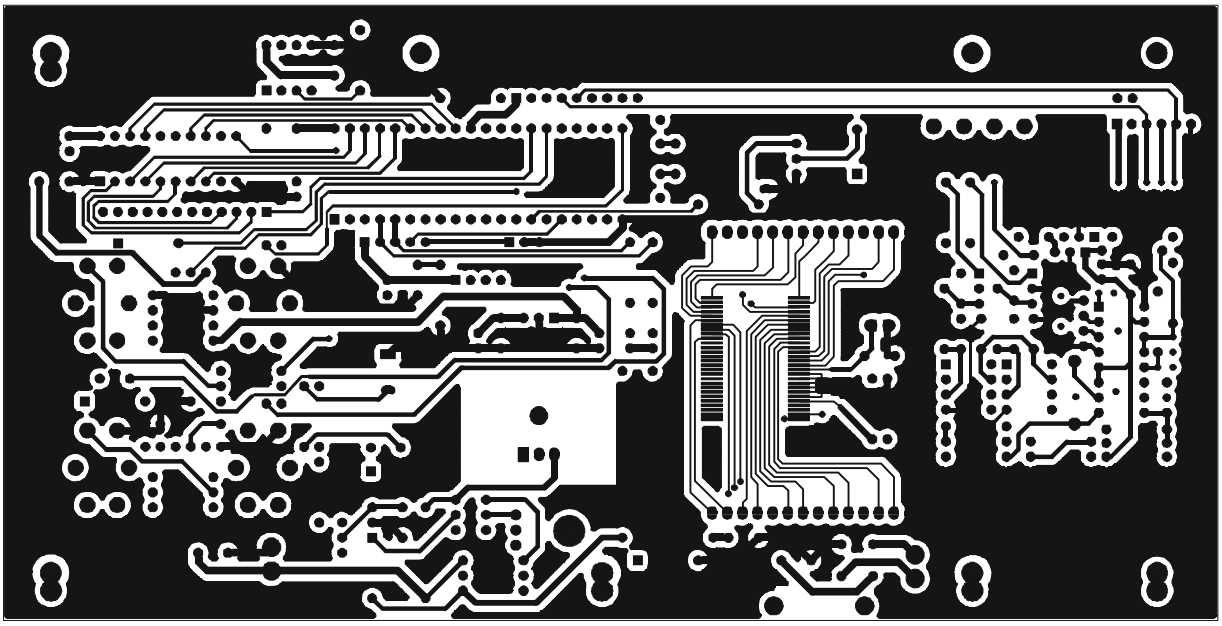

AFW-10-1 TOP LAYER

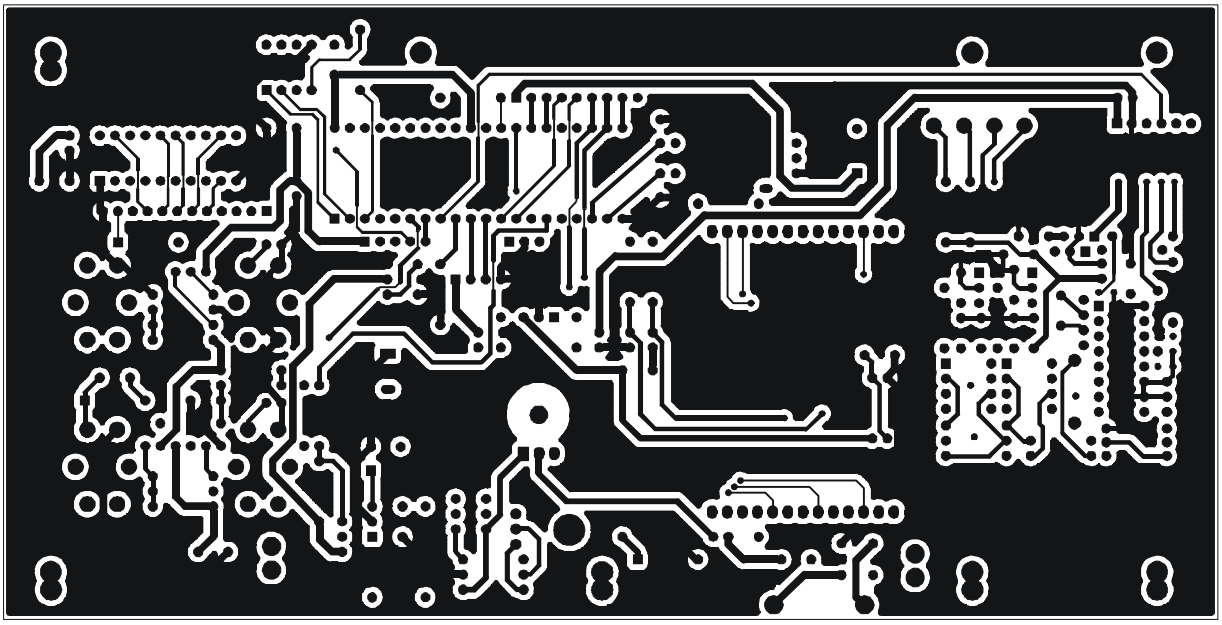

AFW-10-1 BOTTOM LAYER

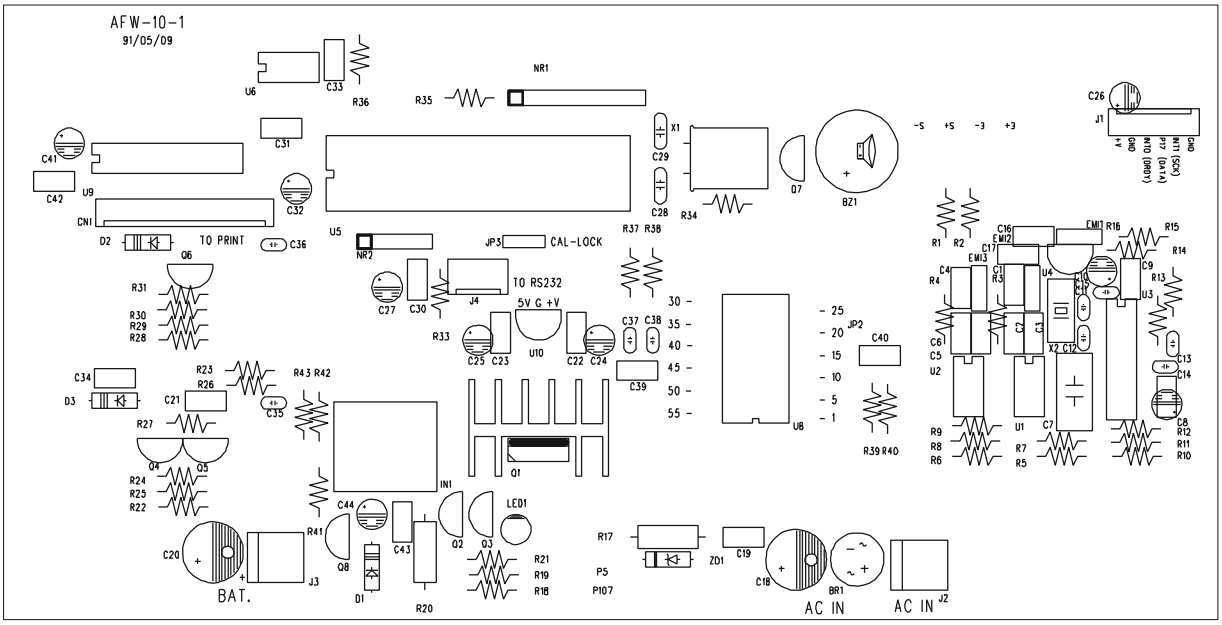

AFW-10-1 TOP OVERLAY

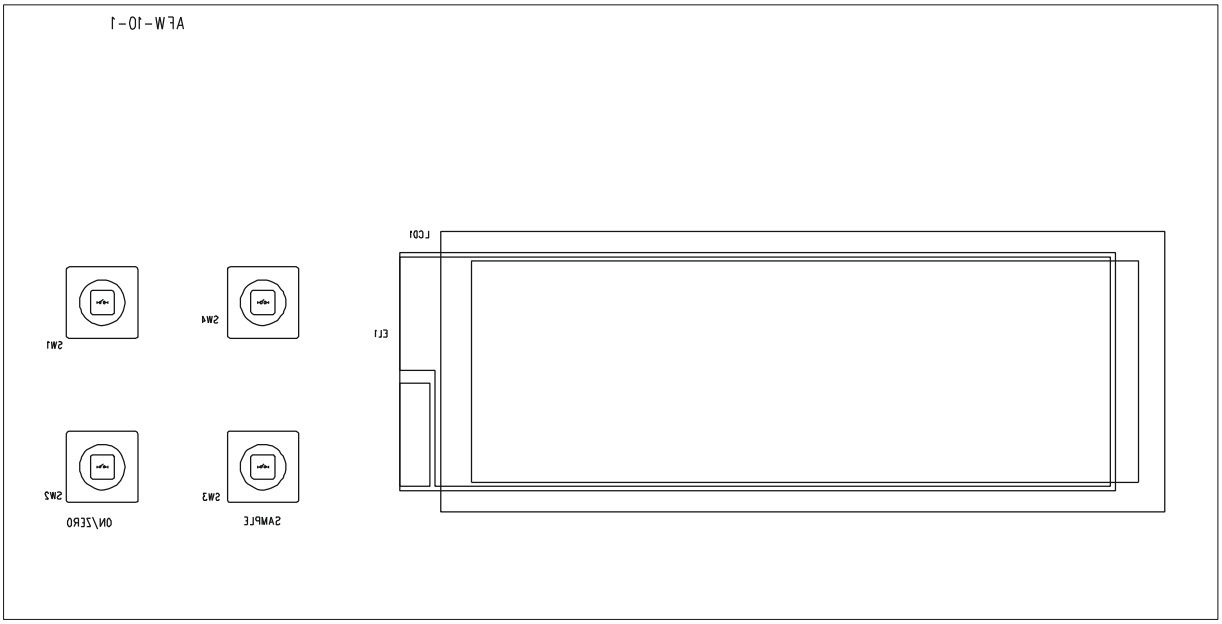

AFW-10-1 BOTTOM OVERLAY

5. BILL OF MATERIAL

AFW SERIES

STRUCTURE

Parts No.	Description	Specification	Qty	Remark
A0905600500	CONNECTOR	5 PIN(PLT-165-R)	1	
A1007000001	FERRITE CORE	TR-16*9*28mm	1	
A1007000004	FERRITE CORE	T-28.3*13.8*13.5mm	1	
A1204040370	WIRE ARRAY	4 PIN 37cm	1	
C1OFW000000	PANEL PC(TRANSPARENT)	OFW SERIES, 201*78*2t	1	
G0001OFW000	PLASTIC HOUSING(UNDER)	OFW SERIES	1	
G0001FM0200	PLASTIC HOUSING(UPPER)	FM SERIES, 6 HOLES	1	
C1AFW030000	OVERLAY PC	AFW SERIES	1	
E1AFW000010	P.C.B. KIT	AFW-10-X MAINBOARD	1	
A1600060400	RECHARGEABLE BATTERY	6V 4Ah	1	
A1208020351	BATTERY WIRE ARRAY	2PIN 35cm,SINGLE HOUSING	1	
A1208020601	BATTERY WIRE ARRAY	2PIN 60cm,SINGLE HOUSING	1	
F0007NBS102	BATTERY CLAMP	NBS SERIES(ALUMINUM HOUSING)	1	
A60********	ADAPTOR	***V/9V,500mA	1	
G0003PSP000	PLASTIC FIX PLATE	PSP/OFW SERIES, U SHAPE	1	
G0030000800	ADJUSTABLE FEET	M8*1.25P*15L	2	
A0906000210	DC JACK	SCD-021(BLACK)	1	
A0905600501	CONNECTOR	5 PIN(PLT-165-P)	1	
G0005NBS000	RUBBER WASHER	¡ 27*9*3mm	2	

AFW-10-X MAINBOARD

E0AFW000010	P.C.B.	AFW-10-X	1	
A0102000289	L.C.D.	UTN-G289JV-W	1	LCD1
A0201089582	I.C.	SM8958AC25P	1	U5
A0202093462	I.C.	93C46PC27 OR 93LC46	1	U6
A0207017220	VOLTAGE REGULATOR I.C.	AIC1722-50CZT	1	U10
A0208085760	I.C.	PCF8576CT	1	U8
A0300000040	I.C. SOCKET	40 PIN	1	U5
A0401007330	TRANSISTOR	A733	2	Q3,6
A0401009450	TRANSISTOR	2SC945	3	Q2,5,7
A0401010610	TRANSISTOR	H1061C OR D880	1	Q1

A0401015150	TRANSISTOR	A1515	2	Q4,8
A0501004148	DIODE	1N4148	3	D1-3
A0502000001	BRIDGE RECTIFIER	W06(1A)	1	BR1
A0503020082	ZENER DIODE	1/2W 8V2(9A3)	1	ZD1
A0625050000	L.E.D.	GREEN/RED,ROUND 5mm	1	LED1
A0701106017	CAPACITOR (EC)	10uF/25V(SS TYPE)	4	C26,27,32,41
A0701107016	CAPACITOR (EC)	100uF/16V	3	C24,25,44
A0701108016	CAPACITOR (EC)	1000uF/16V	1	C18
A0701477016	CAPACITOR (EC)	470uF/16V	1	C20
A0730104050	CAPACITOR (MLC)	104Z	12	C19,21-23,30,31, 33,34,39,40,42, 43
A0740030050	CERAMIC CAPACITOR (CC)	30pf/50V(30)	2	C28,29
A0740101050	CERAMIC CAPACITOR (CC)	100pf/50V(101)	4	C35-38
A0804041503	METAL FILM RESISTOR	150K£ 1/4W	1	R28
A0804045003	METAL FILM RESISTOR	500K£ 1/4W	1	R30
A0805020120	CARBON FILM RESISTOR	1.2£ 1/2W	1	R20
A0805021101	CARBON FILM RESISTOR	100£ 1/2W	1	R17
A0805041101	CARBON FILM RESISTOR	100£ 1/4W	2	R37,38
A0805041221	CARBON FILM RESISTOR	220£ 1/4W	1	R18
A0805041102	CARBON FILM RESISTOR	1K£ 1/4W	2	R36,43
A0805041103	CARBON FILM RESISTOR	10K£ 1/4W	8	R22,23,27,33-35,40-41
A0805041153	CARBON FILM RESISTOR	15K£ 1/4W	2	R21,39
A0805041223	CARBON FILM RESISTOR	22K£ 1/4W	1	R29
A0805041272	CARBON FILM RESISTOR	2.7K£ 1/4W	2	R25,31
A0805041471	CARBON FILM RESISTOR	470£ 1/4W	1	R19
A0805041472	CARBON FILM RESISTOR	4.7K£ 1/4W	1	R24,42
A0805041473	CARBON FILM RESISTOR	47K£ 1/4W	1	R26
A0802010305	RESISTOR NETWORK	10K£ 5 PIN	1	NR2
A0802010309	RESISTOR NETWORK	10K£ 9 PIN	1	NR1
A0902010020	CONNECTOR	2 PIN WAFER,PITCH=3.9mm	2	J2,3
A0907010030	CONNECTOR	1 * 3 PIN 180¢	1	JP3
A0910111020	MINI JUMPER	PITCH 2.54	1	JP3
A1100211059	CRYSTAL	11.0592MHZ	1	X1
A1500000004	BUZZER	OBO-15210	1	BZ1
A1306000003	TACT SW.	KPT-1104B	4	SW1-4
A5004000004	HEAT SINK	MB-217-22+PIN	1	Q1

A/D SECTION

A0203077050	I.C.	AD7705AN	1	U3
A0206000072	I.C	OP177	2	U1-2
A0207029500	VOLTAGE REGULATOR I.C.	AS2950AW	1	U4
A0702226016	CAPACITOR (TC)	22uF/16V(226)	1	C10
A0713105063	POLYESTER FILM CAPACITOR(MEF)	1uF/63V (105)	1	C7
A0730104050	CAPACITOR (MLC)	104Z	5	C3,6,9,16,17
A0731104050	CAPACITOR (X7R)	104Z	5	C1,2,4,5,8
A0740047050	CERAMIC CAPACITOR (CC)	47pf/50V(47)	2	C11-12
A0740101050	CERAMIC CAPACITOR (CC)	100pf/50V(101)	3	C13-15
A0803041002	METAL FILM RESISTOR	10K£ 1/4W	2	R7-8
A0803041501	METAL FILM RESISTOR	1.5K£ 1/4W	1	R12
A0803043001	METAL FILM RESISTOR	3K£ 1/4W	1	R11
A0803041500	METAL FILM RESISTOR	150£ 1/4W	1	R9 (SPAN)
A0804044701	METAL FILM RESISTOR	4.7K£ 1/4W	4	R3-6
A0805041101	CARBON FILM RESISTOR	100£ 1/4W	3	R10,R13-14
A0805041103	CARBON FILM RESISTOR	10K£ 1/4W	1	R16
A0805041561	CARBON FILM RESISTOR	560£ 1/4W	1	R15
A1008000001	EMI FILTER	DSS-306-55Y5S471M100	3	EMI1-3
A1100249152	CRYSTAL	4.9152MHZ	1	X2
F0015000012	PROTECTION BOX	7705-52-1 (UPPER)	1	
F0015000013	PROTECTION BOX	7705-52-1 (UNDER)	1	
Z0010000305	SCREW	M3*6	2	

BACK LIGHT OPTION

A1400000006	BACK LIGHT(EL)	130.0*44mm	1	EL1
A1401005000	BACK LIGHT INVERTER	5V / 90c¢	1	IN1

RS232 OPTION

A0901010040	CONNECTOR	4 PIN WAFER	1	J4
A0904120250	CONNECTOR	D-SUB 25 PIN(DST TYPE)	1	
E1HBW100000	P.C.B. KIT	HBW SERIES(RS232C-1B1)	1	

APF SERIES

STRUCTURE

Parts No.	Description	Specification	Qty	Remark
A0905600500	CONNECTOR	5 PIN(PLT-165-R)	1	
A1007000001	FERRITE CORE	TR-16*9*28mm	1	
A1007000004	FERRITE CORE	T-28.3*13.8*13.5mm	1	
A1204040370	WIRE ARRAY	4 PIN 37cm	1	
C1OFW000000	PANEL PC(TRANSPARENT)	OFW SERIES, 201*78*2t	1	
G0001706000	PLASTIC HOUSING(UNDER)	1708S SERIES	1	
G0001FM0200	PLASTIC HOUSING(UPPER)	FM SERIES, 6 HOLES	1	
C1AFW030000	OVERLAY PC	AFW SERIES	1	
E1AFW000010	P.C.B. KIT	AFW-10-X MAINBOARD	1	
A1600060400	RECHARGEABLE BATTERY	6V 4Ah	1	
A1208020351	BATTERY WIRE ARRAY	2PIN 35cm,SINGLE HOUSING	1	
A1208020601	BATTERY WIRE ARRAY	2PIN 60cm,SINGLE HOUSING	1	
G0009706000	BATTERY COVER	1708S SERIES	1	
A60********	ADAPTOR	***V/9V,500mA	1	
A0906000210	DC JACK	SCD-021(BLACK)	1	

AFW-10-X MAINBOARD

E0AFW000010	P.C.B.	AFW-10-X	1	
A0102000289	L.C.D.	UTN-G289JV-W	1	LCD1
A0201089582	I.C.	SM8958AC25P	1	U5
A0202093462	I.C.	93C46PC27 OR 93LC46	1	U6
A0207017220	VOLTAGE REGULATOR I.C.	AIC1722-50CZT	1	U10
A0208085760	I.C.	PCF8576CT	1	U8
A0300000040	I.C. SOCKET	40 PIN	1	U5
A0401007330	TRANSISTOR	A733	2	Q3,6
A0401009450	TRANSISTOR	2SC945	3	Q2,5,7
A0401010610	TRANSISTOR	H1061C OR D880	1	Q1
A0401015150	TRANSISTOR	A1515	2	Q4,8
A0501004148	DIODE	1N4148	3	D1-3
A0502000001	BRIDGE RECTIFIER	W06(1A)	1	BR1
A0503020082	ZENER DIODE	1/2W 8V2(9A3)	1	ZD1
A0625050000	L.E.D.	GREEN/RED,ROUND 5mm	1	LED1
A0701106017	CAPACITOR (EC)	10uF/25V(SS TYPE)	4	C26,27,32,41
A0701107016	CAPACITOR (EC)	100uF/16V	3	C24,25,44

A0701108016	CAPACITOR (EC)	1000uF/16V	1	C18
A0701477016	CAPACITOR (EC)	470uF/16V	1	C20
A0730104050	CAPACITOR (MLC)	104Z	12	C19,21-23,30,31, 33,34,39,40,42, 43
A0740030050	CERAMIC CAPACITOR (CC)	30pf/50V(30)	2	C28,29
A0740101050	CERAMIC CAPACITOR (CC)	100pf/50V(101)	4	C35-38
A0804041503	METAL FILM RESISTOR	150K£ 1/4W	1	R28
A0804045003	METAL FILM RESISTOR	500K£ 1/4W	1	R30
A0805020120	CARBON FILM RESISTOR	1.2£ 1/2W	1	R20
A0805021101	CARBON FILM RESISTOR	100£ 1/2W	1	R17
A0805041101	CARBON FILM RESISTOR	100£ 1/4W	2	R37,38
A0805041221	CARBON FILM RESISTOR	220£ 1/4W	1	R18
A0805041102	CARBON FILM RESISTOR	1K£ 1/4W	2	R36,43
A0805041103	CARBON FILM RESISTOR	10K£ 1/4W	8	R22,23,27,33-35,40-41
A0805041153	CARBON FILM RESISTOR	15K£ 1/4W	2	R21,39
A0805041223	CARBON FILM RESISTOR	22K£ 1/4W	1	R29
A0805041272	CARBON FILM RESISTOR	2.7K£ 1/4W	2	R25,31
A0805041471	CARBON FILM RESISTOR	470£ 1/4W	1	R19
A0805041472	CARBON FILM RESISTOR	4.7K£ 1/4W	1	R24,42
A0805041473	CARBON FILM RESISTOR	47K£ 1/4W	1	R26
A0802010305	RESISTOR NETWORK	10K£ 5 PIN	1	NR2
A0802010309	RESISTOR NETWORK	10K£ 9 PIN	1	NR1
A0902010020	CONNECTOR	2 PIN WAFER,PITCH=3.9mm	2	J2,3
A0907010030	CONNECTOR	1 * 3 PIN 180¢	1	JP3
A0910111020	MINI JUMPER	PITCH 2.54	1	JP3
A1100211059	CRYSTAL	11.0592MHZ	1	X1
A1500000004	BUZZER	OBO-15210	1	BZ1
A1306000003	TACT SW.	KPT-1104B	4	SW1-4
A5004000004	HEAT SINK	MB-217-22+PIN	1	Q1

A/D SECTION

A0203077050	I.C.	AD7705AN	1	U3
A0206000072	I.C	OP177	2	U1-2
A0207029500	VOLTAGE REGULATOR I.C.	AS2950AW	1	U4
A0702226016	CAPACITOR (TC)	22uF/16V(226)	1	C10
A0713105063	POLYESTER FILM CAPACITOR(MEF)	1uF/63V (105)	1	C7
A0730104050	CAPACITOR (MLC)	104Z	5	C3,6,9,16,17

A0731104050	CAPACITOR (X7R)	104Z	5	C1,2,4,5,8
A0740047050	CERAMIC CAPACITOR (CC)	47pf/50V(47)	2	C11-12
A0740101050	CERAMIC CAPACITOR (CC)	100pf/50V(101)	3	C13-15
A0803041002	METAL FILM RESISTOR	10K£ 1/4W	2	R7-8
A0803041501	METAL FILM RESISTOR	1.5K£ 1/4W	1	R12
A0803043001	METAL FILM RESISTOR	3K£ 1/4W	1	R11
A0803041500	METAL FILM RESISTOR	150£ 1/4W	1	R9 (SPAN)
A0804044701	METAL FILM RESISTOR	4.7K£ 1/4W	4	R3-6
A0805041101	CARBON FILM RESISTOR	100£ 1/4W	3	R10,R13-14
A0805041103	CARBON FILM RESISTOR	10K£ 1/4W	1	R16
A0805041561	CARBON FILM RESISTOR	560£ 1/4W	1	R15
A1008000001	EMI FILTER	DSS-306-55Y5S471M100	3	EMI1-3
A1100249152	CRYSTAL	4.9152MHZ	1	X2
F0015000012	PROTECTION BOX	7705-52-1 (UPPER)	1	
F0015000013	PROTECTION BOX	7705-52-1 (UNDER)	1	
Z0010000305	SCREW	M3*6	2	

BACK LIGHT OPTION

A1400000006	BACK LIGHT(EL)	130.0*44mm	1	EL1
A1401005000	BACK LIGHT INVERTER	5V / 90c¢	1	IN1

RS232 OPTION

A0901010040	CONNECTOR	4 PIN WAFER	1	J4
A0904120250	CONNECTOR	D-SUB 25 PIN(DST TYPE)	1	
E1HBW100000	P.C.B. KIT	HBW SERIES(RS232C-1B1)	1	

6. APPENDIX

SyncMOS Technologies Inc. **SM8958**

May 2001 ***8 - Bit Micro-controller***

with 32KB flash & 1KB RAM embedded

Product List

SM8958L25, 25 MHz 32KB internal memory MCU
SM8958C25, 25 MHz 32KB internal memory MCU
SM8958C40, 40 MHz 32KB internal memory MCU

Description

The SM8958 series product is an 8 - bit single chip micro controller with 32KB flash & 1KB RAM embedded. It is a derivative of the 8052 micro controller family. With its hardware features and powerful instruction set, it's straight forward to make it a versatile and cost effective controller for those applications which demand up to 32 I/O pins for PDIP package or up to 36 I/O pins for PLCC/QFP package, or applications which need up to 32KB memory either for program or for data or mixed.
To program the on-chip flash memory, a commercial writer is available to do it in parallel programming method.

Ordering Information

yywwv
SM8958ihhk

yy: year, ww:week
v: version identifier {, A, B,...}
i: process identifier {L=3.0V ~ 3.6V, C=4.5V ~ 5.5V}
hh: working clock in MHz {25, 40}
k: package type postfix {as below table}

Postfix	Package	Pin/Pad Configuration	Dimension
P	40L PDIP	page 2	page15
J	44L PLCC	page 2	page16
Q	44L QFP	page 2	page17

Features

- Working voltage: 3.0V ~ 3.6V For L Version
  4.5V ~ 5.5V For C Version
- General 8052 family compatible
- 12 clocks per machine cycle
- 32 KB internal flash memory
- 1024 bytes data RAM
- 3 16 bit timers/counters
- Four 8-bit I/O ports for PDIP package
- Four 8-bit I/O ports + one 4-bit I/O ports for PLCC or QFP package
- Full duplex serial channel
- Bit operation instruction
- Page free jumps
- 8-bit unsigned division
- 8-bit unsigned multiply
- BCD arithmetic operations
- Direct addressing
- Indirect addressing
- Nested interrupts
- Two priority level interrupts
- A serial I/O port
- Power save modes:
  Idle mode and power down mode
- Code protection function
- One watch dog timer (WDT)
- Low EMI (inhibit ALE)

Taiwan
4F, No. 1 Creation Road 1,
Science-based Industrial Park,
Hsinchu, Taiwan 30077

TEL: 886-3-579-2928
886-3-579-2988
FAX: 886-3-579-2950
886-3-578-0493

Specifications subject to change without notice,contact your sales representatives for the most recent information.

Pin Configurations

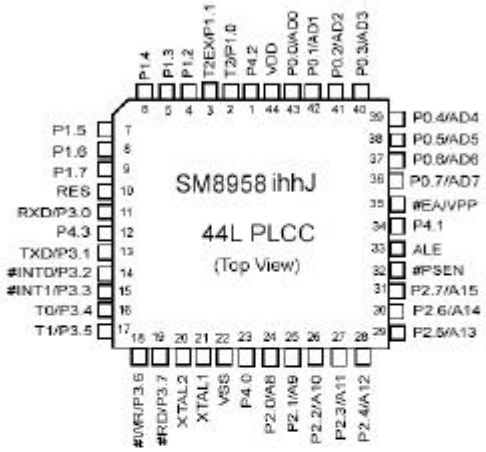

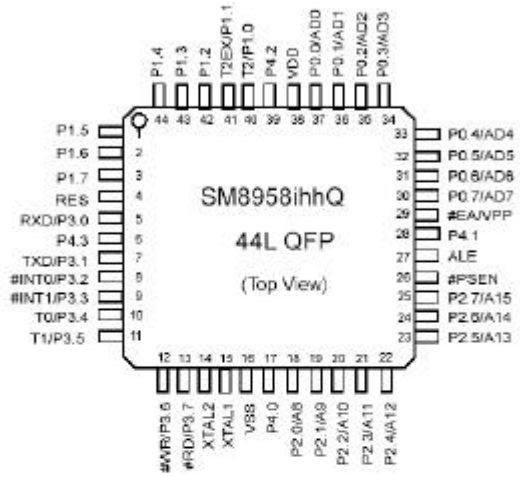

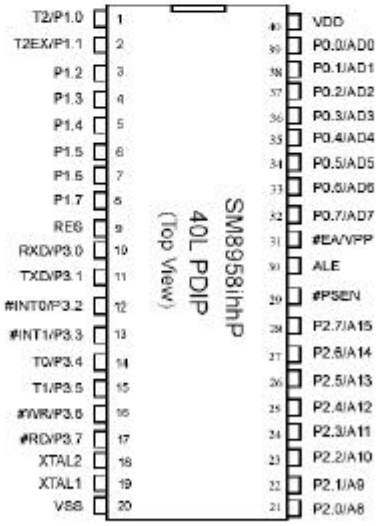

Block Diagram

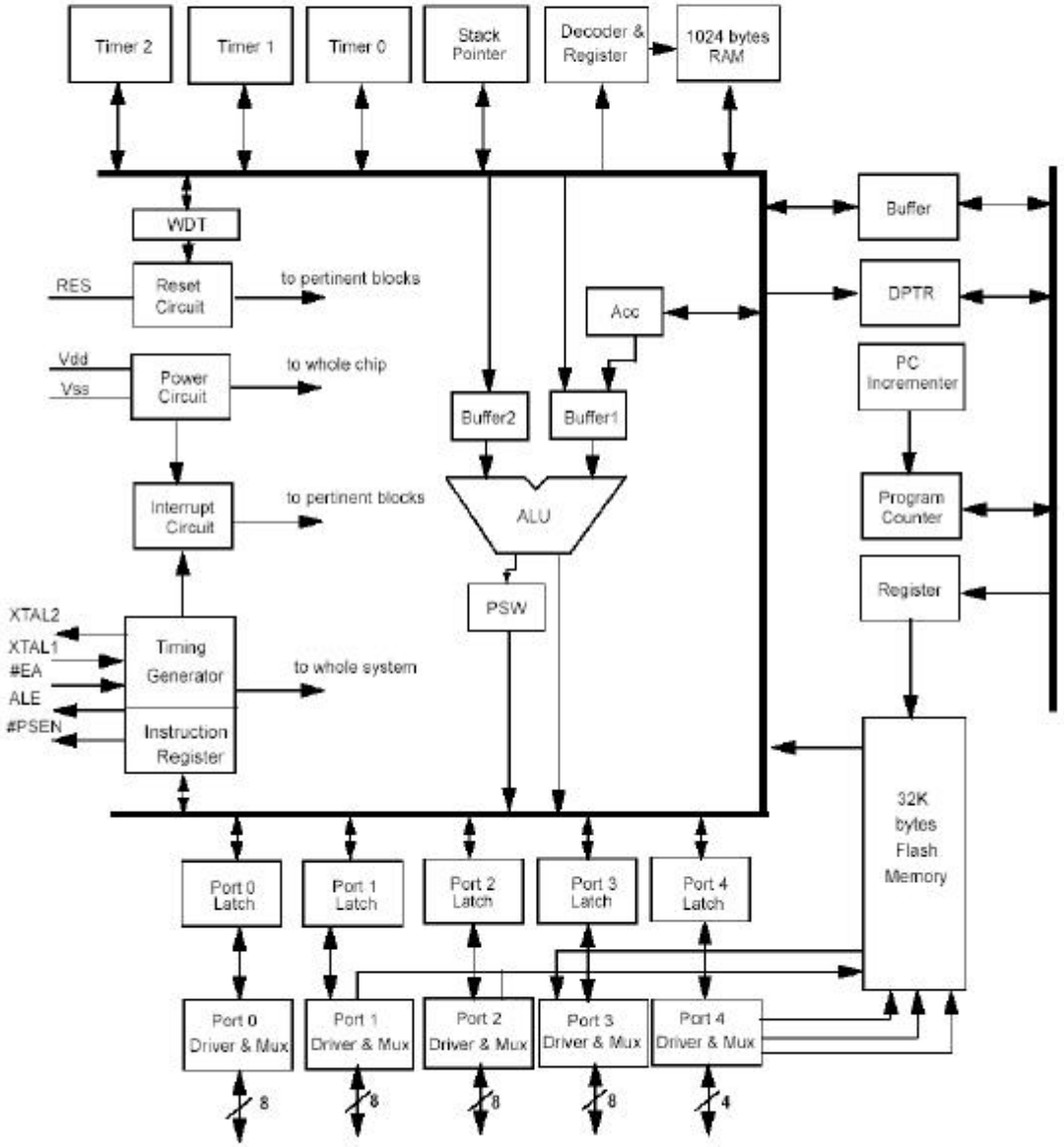

3 V/5 V, 1 mW 2-/3-Channel 16-Bit, Sigma-Delta ADCs

AD7705/AD7706*

FEATURES

AD7705: Two Fully Differential Input Channel ADCs
AD7706: Three Pseudo Differential Input Channel ADCs
16 Bits No Missing Codes
0.003% Nonlinearity
Programmable Gain Front End
Gains from 1 to 128
Three-Wire Serial Interface
SPI™, QSPI™, MICROWIRE™ and DSP Compatible
Schmitt Trigger Input on SCLK
Ability to Buffer the Analog Input
2.7 V to 3.3 V or 4.75 V to 5.25 V Operation
Power Dissipation 1 mW max @ 3 V
Standby Current 8 μA max
16-Lead DIP, 16-Lead SOIC and TSSOP Packages

FUNCTIONAL BLOCK DIAGRAM

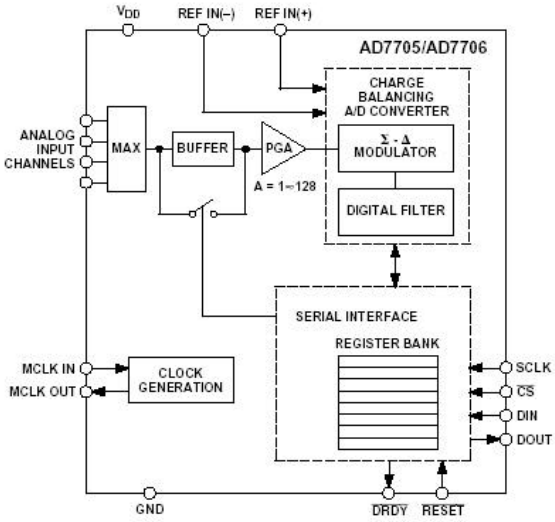

GENERAL DESCRIPTION

The AD7705/AD7706 are complete analog front ends for low frequency measurement applications. These two-/three-channel devices can accept low level input signals directly from a transducer and produce a serial digital output. They employ a sigma-delta conversion technique to realize up to 16 bits of no missing codes performance. The selected input signal is applied to a proprietary programmable gain front end based around an analog modulator. The modulator output is processed by an on-chip digital filter. The first notch of this digital filter can be programmed via an on-chip control register allowing adjustment of the filter cutoff and output update rate.

The AD7705/AD7706 operate from a single 2.7 V to 3.3 V or 4.75 V to 5.25 V supply. The AD7705 features two fully differential analog input channels while the AD7706 features three pseudo differential input channels. Both devices feature a differential reference input. Input signal ranges of 0 mV to +20 mV through 0 V to +2.5 V can be incorporated on both devices when operating with a V_{DD} of 5 V and a reference of 2.5 V. They can also handle bipolar input signal ranges of ±20 mV through ±2.5 V, which are referenced to the AIN(–) inputs on the AD7705 and to the COMMON input on the AD7706. The AD7705/AD7706, with 3 V supply and a 1.225 V reference, can handle unipolar input signal ranges of 0 mV to +10 mV through 0 V to +1.225 V. Its bipolar input signal ranges are ±10 mV through ±1.225 V. The AD7705/AD7706 thus perform all signal conditioning and conversion for a two- or three-channel system.

The AD7705/AD7706 are ideal for use in smart, microcontroller or DSP-based systems. They feature a serial interface that can be configured for three-wire operation. Gain settings, signal polarity and update rate selection can be configured in software using the input serial port. The part contains self-calibration and system calibration options to eliminate gain and offset errors on the part itself or in the system.

CMOS construction ensures very low power dissipation, and the power-down mode reduces the standby power consumption to 20 μW typ. These parts are available in a 16-lead, 0.3 inch-wide, plastic dual-in-line package (DIP), a 16-lead wide body (0.3 inch) small outline (SOIC) package and also a low profile 16-lead TSSOP.

PRODUCT HIGHLIGHTS

1. The AD7705/AD7706 consumes less than 1 mW at 3 V supplies and 1 MHz master clock, making it ideal for use in low power systems. Standby current is less than 8 μA.
2. The programmable gain input allows the AD7705/AD7706 to accept input signals directly from a strain gage or transducer, removing a considerable amount of signal conditioning.
3. The AD7705/AD7706 is ideal for microcontroller or DSP processor applications with a three-wire serial interface reducing the number of interconnect lines and reducing the number of opto-couplers required in isolated systems.
4. The part features excellent static performance specifications with 16 bits, no missing codes, ±0.003% accuracy and low rms noise (<600 nV). Endpoint errors and the effects of temperature drift are eliminated by on-chip calibration options, which remove zero-scale and full-scale errors.

*Protected by U.S. Patent Number 5,134,401.
SPI and QSPI are trademarks of Motorola, Inc.
MICROWIRE is a trademark of National Semiconductor.

REV. A

Information furnished by Analog Devices is believed to be accurate and reliable. However, no responsibility is assumed by Analog Devices for its use, nor for any infringements of patents or other rights of third parties which may result from its use. No license is granted by implication or otherwise under any patent or patent rights of Analog Devices.

One Technology Way, P.O. Box 9106, Norwood, MA 02062-9106, U.S.A.
Tel: 781/329-4700 World Wide Web Site: http://www.analog.com
Fax: 781/326-8703
© Analog Devices, Inc., 1998

1 FEATURES

- Single-chip LCD controller/driver
- Selectable backplane drive configuration: static or 2/3/4 backplane multiplexing
- Selectable display bias configuration: static, ½ or ⅓
- Internal LCD bias generation with voltage-follower buffers
- 40 segment drives: up to twenty 8-segment numeric characters; up to ten 15-segment alphanumeric characters; or any graphics of up to 160 elements
- 40 × 4-bit RAM for display data storage
- Auto-incremented display data loading across device subaddress boundaries
- Display memory bank switching in static and duplex drive modes
- Versatile blinking modes
- LCD and logic supplies may be separated
- Wide power supply range: from 2 V for low-threshold LCDs and up to 9 V for guest-host LCDs and high-threshold (automobile) twisted nematic LCDs
- Low power consumption
- Power-saving mode for extremely low power consumption in battery-operated and telephone applications
- I²C-bus interface
- TTL/CMOS compatible
- Compatible with any 4-bit, 8-bit or 16-bit microprocessors/microcontrollers
- May be cascaded for large LCD applications (up to 2560 segments possible)
- Cascadable with 24-segment LCD driver PCF8566
- Optimized pinning for plane wiring in both single and multiple PCF8576 applications
- Space-saving 56-lead plastic very small outline package (VSO56)
- Very low external component count (at most one resistor, even in multiple device applications)
- Compatible with chip-on-glass technology
- Manufactured in silicon gate CMOS process.

2 GENERAL DESCRIPTION

The PCF8576 is a peripheral device which interfaces to almost any Liquid Crystal Display (LCD) with low multiplex rates. It generates the drive signals for any static or multiplexed LCD containing up to four backplanes and up to 40 segments and can easily be cascaded for larger LCD applications. The PCF8576 is compatible with most microprocessors/microcontrollers and communicates via a two-line bidirectional I²C-bus. Communication overheads are minimized by a display RAM with auto-incremented addressing, by hardware subaddressing and by display memory switching (static and duplex drive modes).

3 ORDERING INFORMATION

TYPE NUMBER	PACKAGE		
	NAME	DESCRIPTION	VERSION
PCF8576T	VSO56	plastic very small outline package; 56 leads	SOT190-1
PCF8576U	–	chip in tray	–
PCF8576U/2	–	chip with bumps in tray	–
PCF8576U/5	–	unsawn wafer	–
PCF8576U/10	FFC	chip on film frame carrier (FFC)	–
PCF8576U/12	FFC	chip with bumps on film frame carrier (FFC)	–

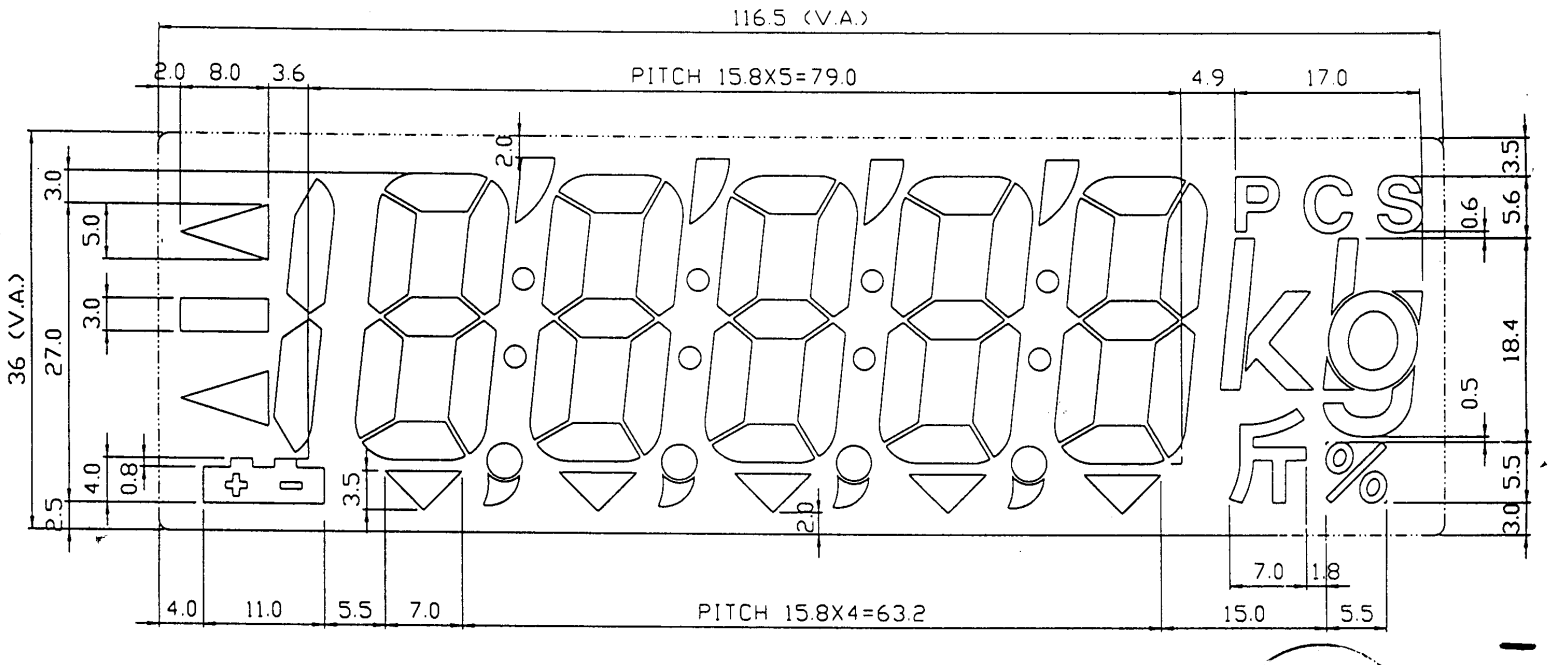

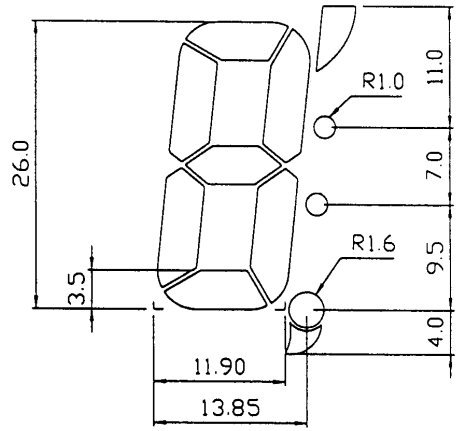

DO NOT SCALE THIS DRAW

REV	DATE	BY	MODEL: G289
			TITLE: DESIGN DWG
	CUS-TOMER	U.W.E.	DWG NO: URT-1711D -0

SCALE	UNIT	DATE	APPROVAL	CHECK	DRAWN
1.8/1	MM	03/18 1997		Jensen.H	SANDY

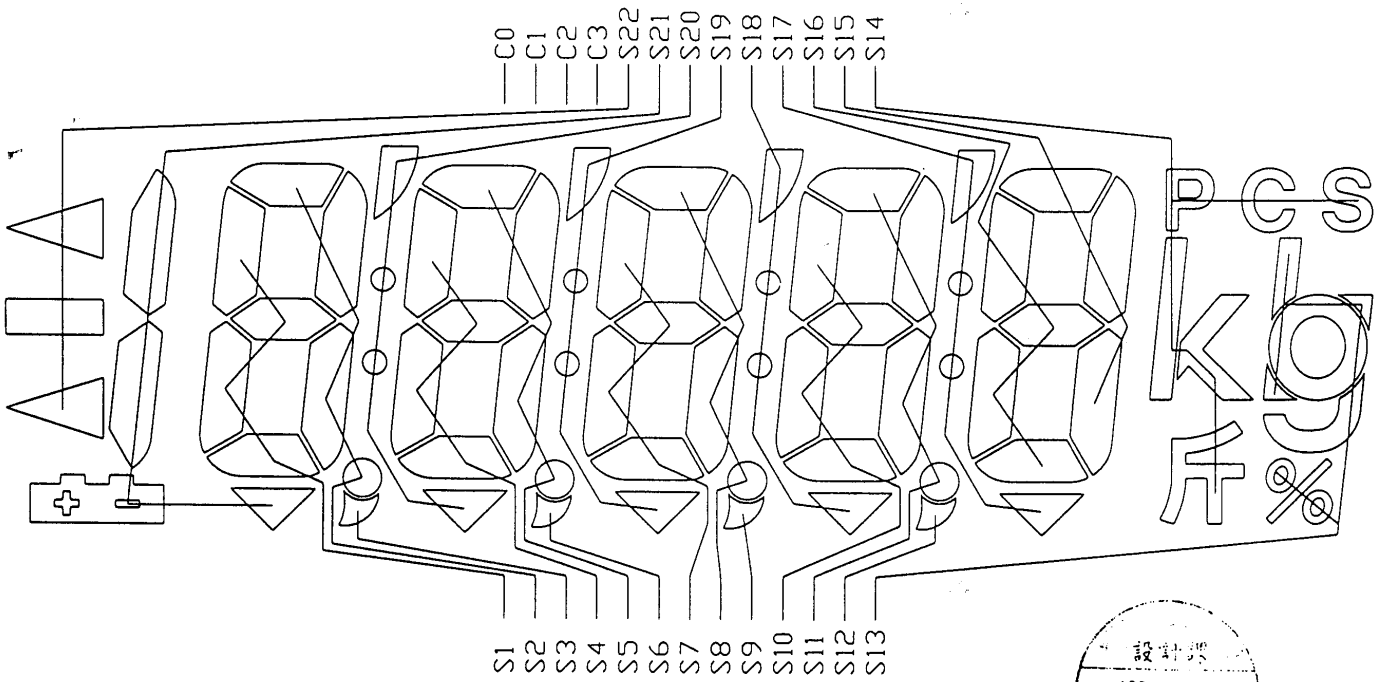

APR 2 1 1997
出圖

SEGMENT

REV	DATE	BY	MODEL: G289
			TITLE: WIRING DWG
	CUS-TOMER	U.W.E.	DWG NO: URT-1711 W1 -0

SCALE	UNIT	DATE	APPROVAL	CHECK	DRAWN
2/1	MM	03/18 1997		Jemeen.H	SANDY

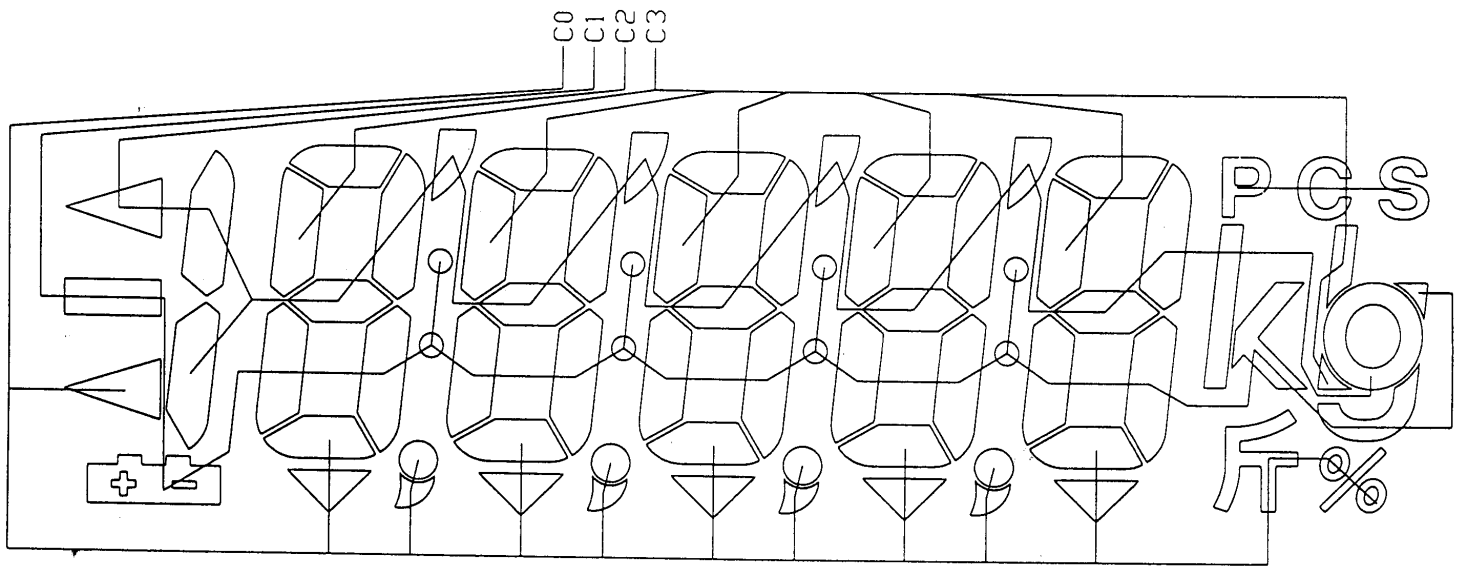

APR 2 1 1997
出圖

COMMON

REV	DATE	BY	MODEL: G289
			TITLE: WIRING DWG
			DWG NO: URT-1711W2 -0
CUS-TOMER	U.W.E.		

SCALE	UNIT	DATE	APPROVAL	CHECK	DRAWN
2/1	MM	03/18 1997		Jensen.H	SANDY

URT-BE-303-02A

APPROVED NO.:		REV.
DRAWING NO.: AFW0-M-01-A		1
DWG. NAME	AFW SERIES SEALING DIAGRAM	

AFW SERIES SEALING DIAGRAM

SEALING POSITIONS

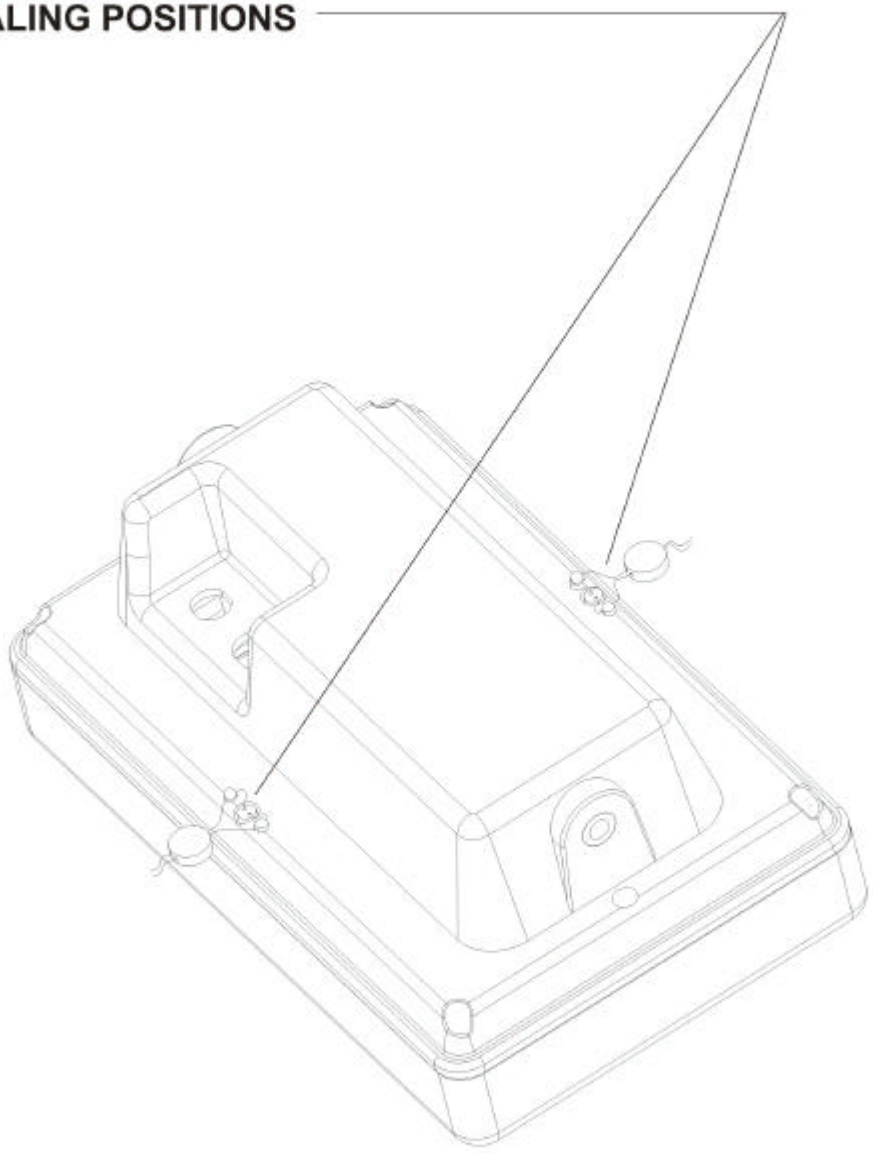

AFW SERIES EXPLOSION DIAGRAM

APPROVED NO.:		REV.
DRAWING NO.: AFW0-E-01-A		1
DWG. NAME	AFW SERIES EXPLOSION DIAGRAM	

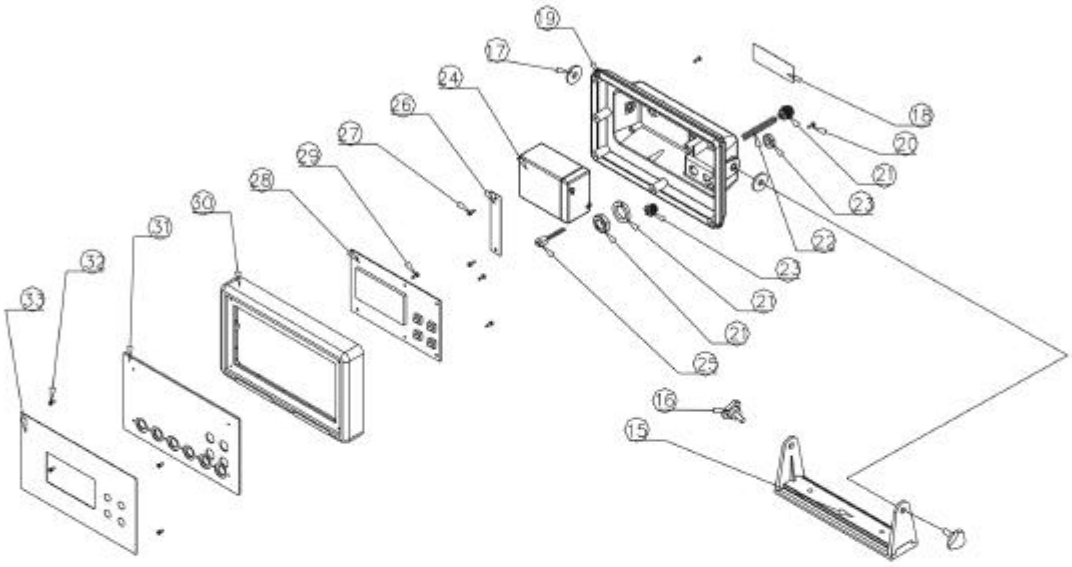

ITEM	PART NO.	PART NAME	SPECIFICATION	QTY	DRAW NO.
15	G0003PSP000	DISPLAY FIX PLATE	FSP/OFW	1	
16	G0004EC0001	ADJUST FEET	EC/OFW	2	
17	G0005NBS000	RUBBER WASHER	ø27X9X3	2	
18	D0BS0500001	NAME PLATE		1	
19	G0001OFW000	DISPLAY COVER-REAR	OFW	1	
20	Z0010000315	SCREW-FLAT HEAD	M3X15	2	
21		CONNECTOR	PLT-165-R	1	
		WASHER	PLT-165-R	1	
		NUT	PLT-165-R	1	
22	A1204040250	P.C.B. WIRE ARRAY	4PIN 25CM	1	
23	A0906000210	DC JACK	SCD-21	1	
		NUT	SCD-21	1	
24	A1600060400	RECHARGEABLE BATTERY	GP4-6 6V 4AH	1	
25	A1208020351	BATTERY WIRE ARRAY	2PIN 35CM	1	
26	F0007NBS102	BATTERY FIX PLATE		1	
27	Z0010001308	SCREW-FLAT HEAD TAP	3x8	2	
28	E1AFW000010	P.C.B.	AFW-10-1 MAINBOARD	1	
29	Z0010001305	SCREW-FLAT HEAD TAP	3x5	3	
30	G0001FM0200	DISPLAY COVER-FRONT	FM SERIES, 6 HOLES	1	
31	C10FM000000	PMMA PANEL	OFW SERIES, 201*76*2T	1	
32	Z0011000310	SCREW-PAN HEAD	M3X10	4	
33	C1AFM030000	DISPLAY PANEL	AFW SERIES	1	
34	A0905600500	CONNECTOR	5 PIN(PLT-165-R)	1	
35	G0004MP0000	NUT	1/4"X28T	2	

APF SERIES EXPLOSION DIAGRAM

APPROVED NO.:		REV.
DRAWING NO.: APF0-E-01-A		1
DWG. NAME	APF SERIES EXPLOSION DIAGRAM	

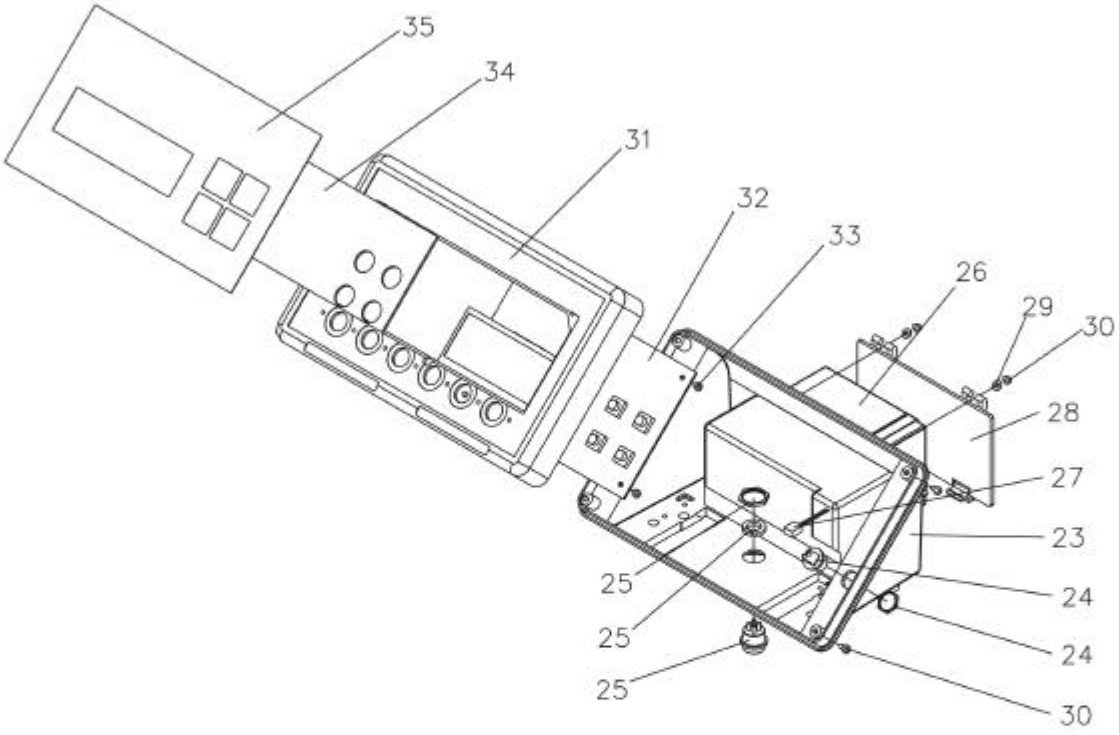

ITEM	PART NO.	PART NAME	DESCRIPTION	QTY
23	G0001706000	PLASTIC HOUSING(UNDER)	1708S SERIES	1
24	Z0010001310	DC JACK	SCD-021(BLACK)	1
25	A0905600500	CONNECTOR	5 PIN(PLT-165-R)	1
26	A1600060400	RECHARGEABLE BATTERY	6V 4Ah	1
27	A1208020351	BATTERY WIRE ARRAY	2PIN 35cm,SINGLE HOUSING	1
28	G0009706000	BATTERY COVER	1708S SERIES	1
29	Z0040000003	WASHER	M3	2
30	Z0010001306	SCREW	TAPED, M3*6	4
31	G0001FM0200	PLASTIC HOUSING(UPPER)	FM SERIES	1
32	E1AFW000010	P.C.B. KIT	AFW-10-X MAINBOARD	1
33	Z0010001310	SCREW	TAPED, M3*10	4
34	C1OFW000000	PANEL PC	OFW SERIES, 200*78*2mm	1
35	C1AFW030000	OVERLAY PC	AFW SERIES	1