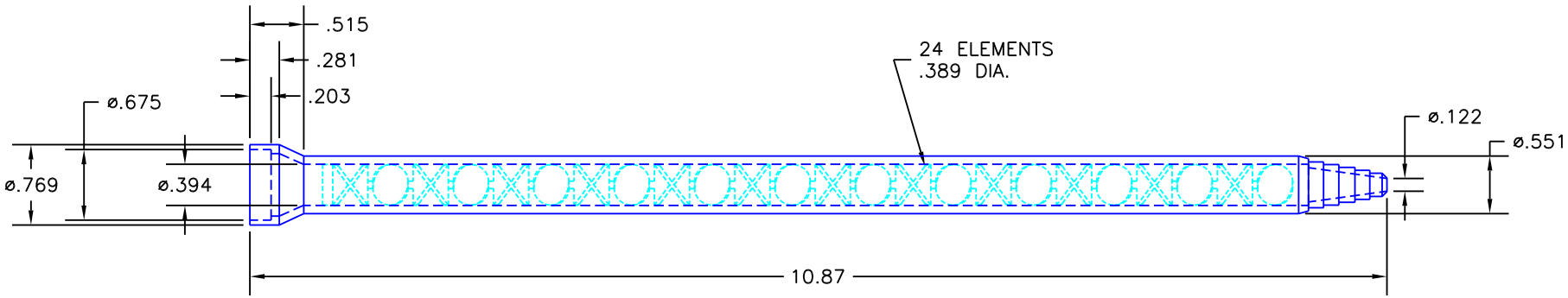

NOTE:
THIS WAS FORMERLY SOLD AS 985247.

ITEM	QTY.	DESCRIPTION	PART NUMBER
3	1	EQUIPMENT BAR CODE PACKAGING SPECIFICATION	988139
2	1	EQUIPMENT SOFT PACKAGING SPECIFICATION	989053
1	10	MIX NOZZLE, 10MM, 24 ELEMENT	986299

PARTS LIST

NOTE: DRAWING WAS CREATED BY MEASURING A COMPONENT AND MAY NOT BE ACCURATE.

THIRD ANGLE PROJECTION

THIS DOCUMENT, INCLUDING THE INFORMATION CONTAINED HEREIN, IS THE PROPERTY OF LOCTITE CORPORATION AND IS DELIVERED ON THE EXPRESS CONDITION THAT IT NOT BE DISCLOSED, REPRODUCED IN WHOLE OR IN PART OR USED FOR MANUFACTURE WITHOUT THE WRITTEN CONSENT OF LOCTITE CORPORATION.

UNLESS OTHERWISE SPECIFIED

TOLERANCES
.XX = ±.010 FRACTIONS = ±1/64
.XXX= ±.005 ANGLES = 0°-30'
BREAK SHARP EDGES .005-.020
FILLET RADII .005-.020
DIMENSIONS ARE IN INCHES

DO NOT SCALE DWG.

MATERIAL

FINISH

	NAME	DATE
DRN.	G. PATCH	10/25/04
DESG.		
CHK.		
APPR.		

CAD SCALE = 1:1

MODEL

LOCTITE®
ROCKY HILL, CT 06067

TITLE
200-400 MIX NOZ, 10D-24E,10PK

FSCM NO. 05972
DWG. NO. B-98459
REV.

SCALE FULL
SHEET 1 OF 1