redefining meeting spaces



ANTHOLOGY

JSI #lovewhatyoudo

A COLLECTION OF INSPIRED SOLUTIONS

At its heart, Anthology is more than a furniture series—it's a carefully curated collection of ideas and innovations designed to transform meeting spaces. With a harmonious blend of tabletops, bases, integrated power, and storage, Anthology empowers you to create elegant, adaptable environments where collaboration thrives and ideas flourish.

meet Anthology.

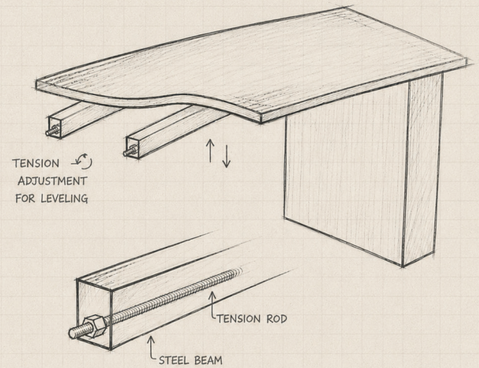

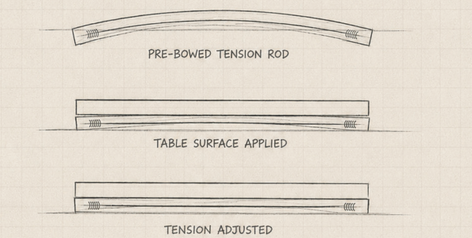

INSPIRED BY DESIGN, PERFECTED BY ENGINEERING.

BridgeLine, the innovative heart of Anthology, draws inspiration from iconic design principles—combining the precise tension control of a guitar truss rod with the engineering elegance of a low profile suspension bridge. Like a bridge's tension cables, BridgeLine's adjustable tension rod ensures flawless stability and strength across broad, unsupported spans, accommodating diverse top materials such as wood, stone, and glass. This patent-pending system achieves a seamless balance of form and function with a minimalist profile and structural ingenuity.







BEAUTY LIES IN THE DETAILS.

Anthology stands out with refined touches like understated credenzas, graceful fluted base details, and sophisticated edge options—seamlessly blending practicality and style.









COMPLETE THE COLLECTION.

Complementing the Anthology collection, coordinating ancillary pieces, including lecterns and hospitality carts, extend the language of the line across collaborative and presentation spaces.



FLEXIBILITY OF CHOICE.

With thoughtfully integrated solutions, Anthology ensures a clutter-free surface, combining productivity and aesthetics to elevate modern meeting environments.









Designed for more open, social environments, Anthology extends into public meeting and collaborative spaces with bar and counter height options available across a variety of distinctive base styles.

tops


rectangular

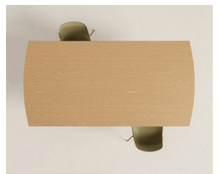
arc rectangular


soft rectangular


racetrack


boat


arc boat


view


ellipse


soft square

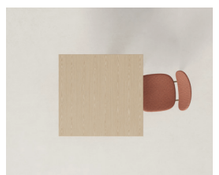
square


round

edges


eased


reverse bevel


transitional


reeded


solid surface

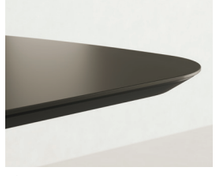
glass

bases


truss


bridge


fluted


conical


bevel


racetrack


rectangle


panel


outline


aspect


oblique


frame


square


cylinder


half cylinder


y base


x base


square disc


round disc

power


ellora


ellora double


M2X


electrolite


vault BTC


vault Z23


node


oasis


glenbeigh – credenza only


undermount

ancillary


conference credenza
metal inset base


low height credenza
wood inset base


buffet credenza
panel inset base


wall hung credenza


equipment credenza


hospitality cart


lectern

laminate

BEL EGR FAW PIL CLY OBK MES BRK UMB
WEA MIN LOF PIN VAL WLH MCH FLO FLN
CSK ZEN DWH BBL SHD SLG BLK

veneer

EGR FAW BUF PIL CLY OBK MES SIE BRK
RYE VAL MCH FLX SAB BAR UMB TRF CSK
MIN LOF FLN SAD CND RAV

solid wood

EGR FAW BUF PIL CLY OBK MES SIE BRK
RYE VAL WLH MCH FLX SAB BAR UMB TRF
MIN LOF PIN FLO FLN SAD CND CSK RAV

metal

BWH CHR ASL SNK PEW MBK ABZ SBZ GLD

POW ANL CAB MUS SPP GOH CDU CAP DUP
DST OLV EMC EVP MWH SPA BLJ EBL SMK
TFB VMA SPR

solid surface

DWH SOG HST ONX

glass

WHM WHG BLM ESM

paint

BWH GRV NWH SVP SKS UKH CHT BKD STM
BFX GAL TRC BTT SAU BRV CCY ROS RPT
QAL PPL NVL WBL DEN PGR BRF KGR



love what you do

JSI is quality furniture for work and life.

225 CLAY STREET
JASPER, INDIANA 47546

800.457.4511 **TOLL FREE**
812.482.3204 **OFFICE**

JSIFURNITURE.COM

J.WO.AN.0526.2600