INSTRUCTION MANUAL

EN

COMBINATION MICROWAVE OVEN

فرن طاولة COMBI بالبخار

AR

فرن ميكروويف مدمج

smeg

Important information for the user
معلومات هامة للمستخدم

Recommendations / تحذيرات

Description / الوصف

Use / الإستعمال

Cleaning and care / التنظيف و الصيانة

Safety instructions / تحذير للسلامة

Information / معلومات

Advice / اقتراحات

Dear Customer, Thank you for purchasing one of our appliances. Our products are unique because they combine iconic style with innovative technical solutions. They match perfectly with other products in our range and work equally well as a standalone design objects in your kitchen. We hope you enjoy using your new appliance! Best regards.

تحتفظ جهة التصنيع بحقها في إجراء أية تغييرات تراها ضرورية لتحسين منتجاتها دون إخطار مسبق. لذا، تعتبر الرسوم التوضيحية والأوصاف الواردة في هذا الدليل غير ملزمة ولكنها إرشادية فقط.

SMEG S.p.A.

Model: MOC02

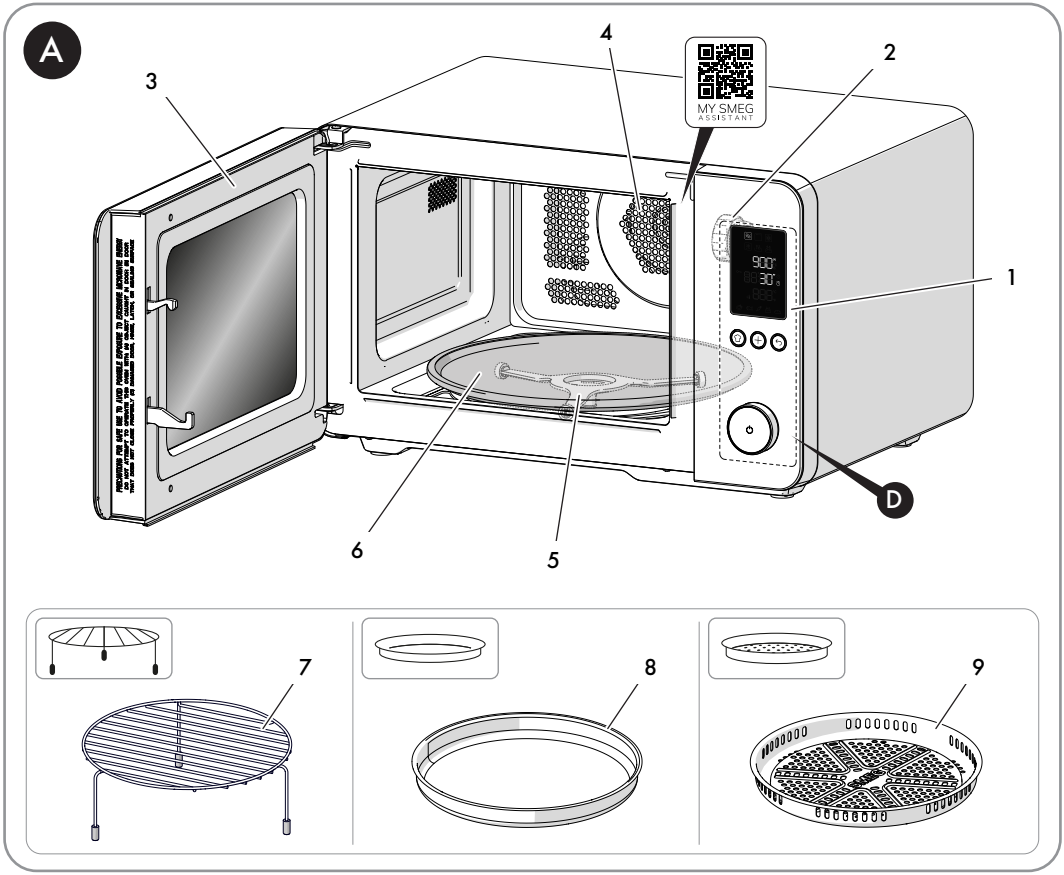

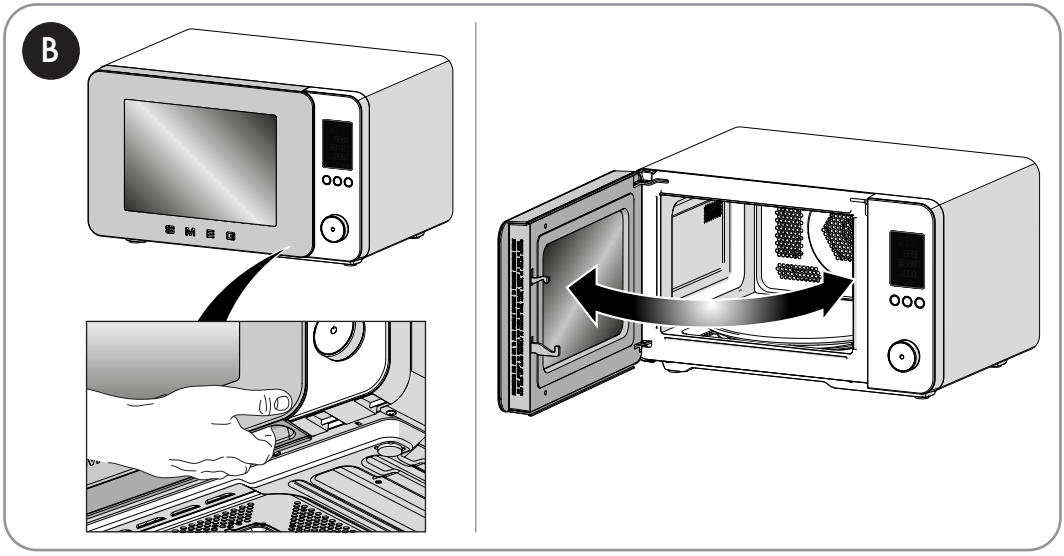

Model: MOC02

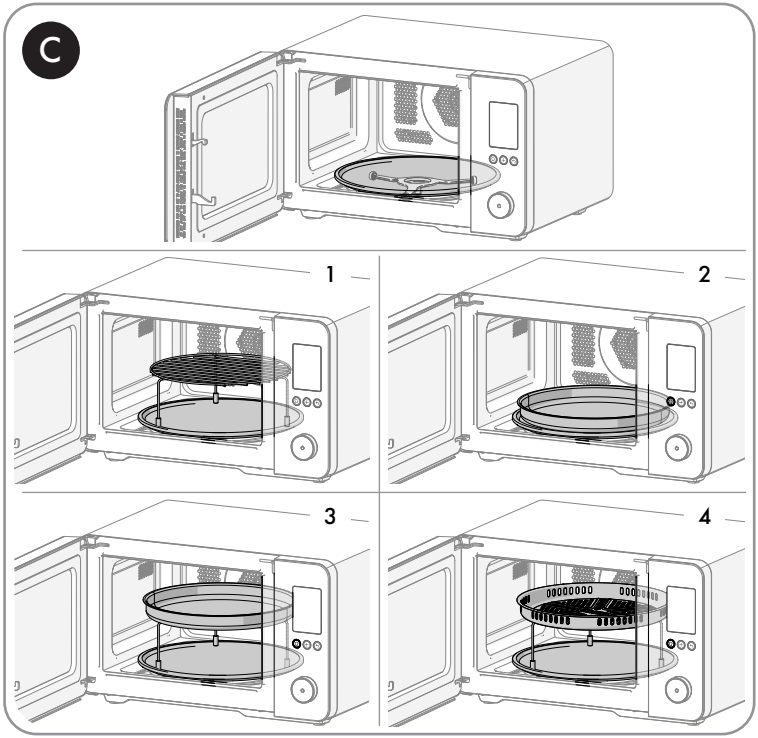
C
1
2
3
4

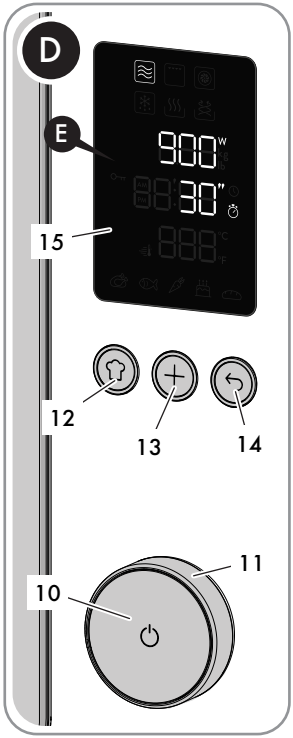
D
E
900
30
15
12
13
14
11
10

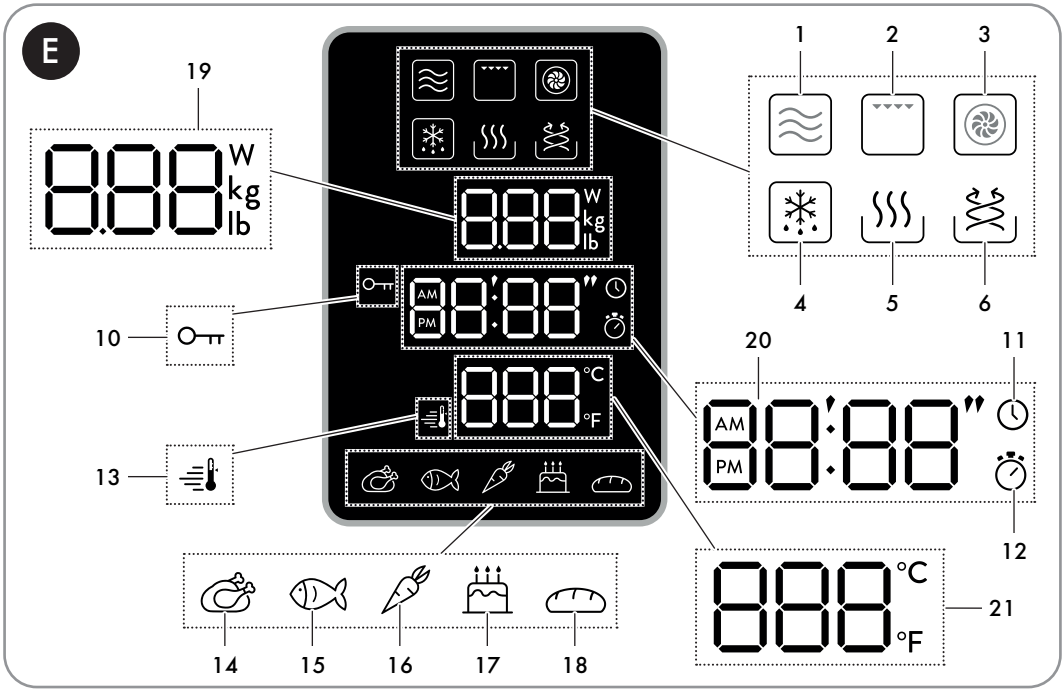
E
19
W
kg
lb
1
2
3
4
5
6
10
AM
PM
20
11
12
13
°C
°F
21
14
15
16
17
18

IMPORTANT SAFETY INSTRUCTIONS READ CAREFULLY AND KEEP FOR FUTURE REFERENCE

1 Instructions

This user manual is an integral part of the appliance and must therefore be kept in its entirety and within the user's reach for the whole working life of the appliance.

1.1 Intended use

Failure to comply with the safety instructions and failure to read the instructions for the microwave oven may lead to the appliance being used incorrectly and cause personal injury.

- Do not use the appliance for purposes other than those for which it was designed. Improper use could cause injury.
- The appliance is not designed to operate with external timers or with remote-control systems.
- Use the appliance indoors, protected from weather conditions.
- This appliance is intended for cooking food in domestic and similar environments, such as:
  - staff kitchen areas in shops, offices and other working environments
  - by guests in hotels, motels and other residential accommodation
  - bed and breakfast facilities / farm accommodation
  - any other use, for example in restaurants, bars and coffee shops is considered improper.

1.2 General safety instructions

Follow all safety instructions in order to use the appliance safely:

- WARNING: When in use, the appliance and its accessible parts become very hot. Small children should be kept away from the appliance. Never touch the heating elements during use.
- Protect your hands by wearing oven gloves when moving food inside the oven.
- Never try to put out a fire or flames with water: Turn off the appliance and smother the flames with a fire blanket or other appropriate cover.
- This appliance may be used by children aged at least 8 and by people of reduced physical, sensory or mental capacity, or lacking in experience in the use of electrical appliances, provided that they are supervised or instructed by adults who are responsible for their safety.
- Children must not play with the appliance.
- Keep children under the age of 8 away from the appliance and power cable unless they are constantly supervised.
- Keep children under the age of 8 away from the appliance when it is in use.
- Cleaning and maintenance must not be carried out by unsupervised children.

Instructions

- The cooking process must always be monitored. A short cooking process must be continuously monitored.
- Never leave the appliance unattended during cooking operations where fats or oils could be released, as these could then heat up and catch fire.
- Be very careful.
- Do not pour water directly on very hot waveguide covers.
- Keep the oven door closed during cooking.
- Switch off the appliance immediately after use.
- Allow the appliance to cool down after use. Do not touch the waveguide covers inside the oven or the heating elements, as they can be very hot. Danger of burns or scalds!
- Do not insert pointed metal objects (cutlery or utensils) into the slots in the appliance.
- Do not use or store flammable materials near the appliance.
- Do not use aerosols in the vicinity of this appliance whilst it is in use.
- Do not modify this appliance.
- Installation and servicing should be carried out by qualified personnel in accordance with current standards.
- Do not try to repair the appliance yourself or without the assistance of a qualified technician.
- Do not pull the cable to unplug the appliance.
- Do not use extension cables.
- Minimum height of free space necessary above the top surface of the oven is 30 cm.
- Appliance must not be placed in a cabinet.
- Only use utensils that are suitable for use in microwave ovens.
- The oven should be cleaned regularly and any food deposits removed.
- This appliance is not intended to be installed in a cabinet. This appliance is intended to be used on a benchtop not exceeding 900mm from the floor.

WARNING: If the door or door seals are damaged, the oven must not be operated until it has been repaired by a competent person.

WARNING: It is hazardous for anyone other than a competent person to carry out any service or repair operation that involves the removal of a cover which gives protection against exposure to microwave energy.

Liquids and other foods must not be heated in sealed containers since they are liable to explode.

Only allow children to use the oven without supervision when adequate instructions have been given so that the child is able to use the oven in a safe way and understands the hazards of improper use.

1.3 Caution when using this appliance

- Do not sit on the appliance.
- Do not use abrasive or corrosive detergents (e.g. powder products, stain removers and metallic sponges), rough materials or sharp metal scrapers on glass parts as they may scratch the surface and cause the glass to shatter. Use wooden or plastic utensils.
- Do not use cleaning products containing chlorine, ammonia, bleach or alcohol on steel parts or parts with a metallic surface finish (e.g. anodised, nickel-plated or chrome-plated).
- Do not use steam jets to clean the appliance.
- Do not spray any spray products near the appliance.
- Do not obstruct ventilation openings and heat dispersal slots.
- Fire hazard: Do not leave objects inside the appliance.
- Do not use the appliance to heat rooms for any reason.
- Do not use plastic cookware or containers unsuitable for microwave cooking.
- Do not use plastic containers unsuitable for microwave cooking when cooking food.
- Do not put sealed tins or containers in the oven.
- WARNING: Do not use hermetically sealed containers to heat food in the microwave, as the increased pressure may cause damage or explosions when the container is opened.
- Do not cook food wrapped in plastic, aluminium or tin foil.
- Do not cover the bottom of the oven cavity with aluminium or tin foil sheets.
- Do not place pans or trays directly on the bottom of the oven cavity.
- If you wish to use greaseproof paper, place it so that it will not interfere with the hot air circulation inside the oven.
- Never use the oven door to lever the appliance into place when fitting.
- Avoid exerting too much pressure on the oven door when open.
- Do not rest any weight or sit on the open door of the appliance.
- Take care that no objects are stuck in the doors.
- Do not install / use the appliance outdoors.
- Install / use the appliance on a flat, stable surface.
- Do not remove the waveguide covers on the sides of the microwave cavity, which prevent grease and food residue from entering the slots.

Instructions

- In the case of vertical combustible walls, install / use the appliance at a minimum distance of 8 cm.
- This appliance must not be installed in boats or caravans.
- The appliance must not be installed on a pedestal.
- Do not immerse the appliance, the power cord or the plug in water or any other liquid.
- Avoid spilling liquids onto the power plug and base.
- If the power cable becomes damaged, contact technical support immediately to arrange for it to be replaced in order to avoid possible hazards.
- Always use any necessary/required personal protective equipment (PPE) before performing any work on the appliance (installation, maintenance, positioning or movement).
- Before performing any work on the appliance, switch off the power supply.
- Metallic containers for food and beverages are not allowed during microwave cooking.
- When heating food in plastic or paper containers, keep an eye on the oven due to the possibility of ignition.
- The microwave oven is intended for heating food and beverages. Drying of food or clothing and heating of warming pads, slippers, sponges, damp cloth and similar may lead to risk of injury, ignition or fire.
- If smoke is observed, switch off or unplug the appliance and keep the door closed in order to stifle any flames.
- Microwave heating of beverages can result in delayed eruptive boiling, therefore care must be taken when handling the container.
- The contents of feeding bottles and baby food jars shall be stirred or shaken and the temperature checked before consumption, in order to avoid burns.
- Eggs in their shell and whole hard-boiled eggs should not be heated in microwave ovens since they may explode, even after microwave heating has ended.
- Failure to maintain the oven in a clean condition could lead to deterioration of the surface that could adversely affect the life of the appliance and possibly result in a hazardous situation.

1.4 Connecting the appliance

Make sure that the voltage and frequency of the power supply correspond to those indicated on the data plate on the bottom of the appliance.

If the plug of the appliance is not compatible with the socket, contact our Technical Assistance service for a replacement.

- Children must not play with this appliance.
- Keep the appliance and its power cable out of the reach of children.
- Always unplug the appliance from the power socket if it is to be left unattended and before assembly, disassembly or cleaning.
- Disconnect the appliance from the power supply before changing the accessories or approaching moving parts when in use.

The accessible surface may be hot during operation.

1.5 Manufacturer liability

The manufacturer declines any liability for damage to persons or property caused by:

- Use of the appliance other than the one envisaged.
- Not having read the user manual.
- Tampering with any part of the appliance.
- Use of non-original spare parts.
- Failure to comply with the safety instructions.

Please store these instructions carefully. If the appliance is transferred to others, they should also be given this instructions booklet.

These instructions can be downloaded from the Smeg website "www.smeg.com".

1.6 Disposal

Electrical appliances must not be disposed of together with household waste.

Devices marked with this symbol are subject to European Directive 2012/19/EU requirements.

- All waste electrical and electronic appliances must be disposed of separately from household waste and taken to authorised waste disposal facilities. Disposing of the used appliance correctly will help to safeguard the environment and human health. For further information regarding the disposal of used appliances, please contact your local authority waste disposal department or the shop where the appliance was purchased.

1.7 Installation

1) Select a level surface that provides enough open space for the intake and/or outlet vents.

- The minimum installation height is 85 cm.
- The rear surface of appliance shall be placed against a wall. Leave a minimum clearance of 30 cm above the oven. A minimum clearance of 20 cm is required between the oven and any adjacent walls.
- Do not remove the legs from the bottom of the oven.
- Blocking the intake and/or outlet openings can damage the oven.
- Place the oven as far away from radios and TV as possible. Operation of microwave oven may cause interference to your radio or TV reception.

2) Plug your oven into a standard household outlet. Be sure the voltage and the frequency is the same as the voltage and the frequency on the rating label.

Do not install oven over a range cooktop or other heat-producing appliance. If installed near or over a heat source, the oven could be damaged and the warranty would be void.

2 Appliance description (Fig. A)

1) Control panel and display
2) Oven light
3) Door
4) Fan
5) Roller ring
6) Turntable
7) Grill rack
8) Crisp plate
9) Air fryer basket

Technical specifications

Rated Voltage/ Frequency	230-240 V~ 50 Hz
Microwave Input	1450 W
Microwave Output	900 W
Grill	950-1000 W
Convection	2000-2100 W

2.1 Before first use

Danger of burns
High appliance temperature

- Failure to follow these instructions may result in fire, burns or scalds.

- Remove any protective film from the outside or inside of the appliance, including accessories.

- Remove any labels (apart from the technical data plate) from the accessories and shelves.
- Remove and wash all the accessories (see section "4 Cleaning and maintenance").

Before use, make sure that all the components are intact.

2.2 Description of the parts (Fig. A)

Light (2)

The appliance's interior lighting comes on:

- When the door is opened.
- during cooking.

Fan (4)

The internal fan cools the appliance and operates during cooking.

The fan causes a steady outflow of air from above the door which may continue for a short time even after the appliance has been switched off.

Roller ring (5)

The appliance is equipped with a roller ring in the centre of the cooking cavity on which the turntable rests.

2.3 Description of accessories (Fig. A)

Turntable (6)

Glass turntable in the centre of the microwave base, used as a support surface and to collect food residues during cooking. It rotates during use to ensure even heat distribution.

Grill rack (7)

Grid that allows food to be placed in a raised position in the oven. Optimises cooking with a grill or fan function. Ideal for even browning, gratinating and roasting.

Crisp plate (8)

Tray that allows you to cook food evenly and to a golden brown. Ideal for pizzas, savoury cakes and gratins, it ensures crisp results in a short time.

Air fryer basket (9)

Perforated tray that allows optimal circulation of hot air, ideal for air frying breaded, pre-cooked and/or frozen foods.

The accessories intended to come into contact with food are made of materials that comply with the provisions of current legislation.

2.4 Description of the controls (Fig. D)

START/STOP button (10)

A short press allows you to confirm the required function or to start or pause cooking. Press and hold to stop cooking or access the user settings section (only available in clock mode).

Navigation knob (11)

Allows you to navigate through the available functions and cooking settings.

Chef Menu button (12)

Gives access to the Chef Menu for automatic programmes.

Plus button (13)

Allows you to activate one of the following functions depending on when it is selected:

- Once a cooking function has been set, it allows you to add a second function to start sequentially from the first (multi-step function).
- When cooking, it adds cooking time in 30 second increments (+30 second function).
- In clock mode, it immediately starts microwave cooking at maximum power (Quick Start function).

Back button (14)

Returns to the previous selection.

Display (15)

The display shows the functions, parameters and the values of the cooking settings.

2.5 Description of the display (Fig. E)

Display icons

	Icon	Meaning
1		Microwave
2		Grill
3		Fan-assisted
4		Defrost
5		Warm
6		Air-Fry
7	+	Microwave + Grill
8	+	Microwave + Fan-assisted
9	+	Grill + Fan-assisted
10		Child lock
11		Clock
12		Cooking timer
13		Pre-heating
14		Meat and poultry
15		Fish and shellfish
16		Vegetables
17		Cakes and sweets
18		Bread, pizza and cereals

Power/weight indicator (19)

Displays cooking power or food weight.

Clock and timer (20)

Displays the time and the cooking time set on the timer.

Temperature and recipe number (21)

Displays the cooking temperature and the automatic programme number in the Chef Menu.

3 Use

3.1 First use

- Heat the empty oven to the maximum temperature to burn off any residues from the manufacturing process.
- Ventilate the room and leave the room while the appliance is heating up.
- When the appliance is used for the first time, when heating, it may give off unpleasant smells due to manufacturing residues remaining on some components. These smells usually disappear after the appliance has been heated for the first time.

Using the accessories (Fig. C)

The turntable must be correctly positioned on the roller ring and the accessories can be placed on it if required.

Accessory	Instructions for use (Fig. C)	Compatible functions						
	(1)	x	✓	✓	✓	x	x	✓
	(2) (3)	x	✓	✓	x	x	x	✓
	(4)	x	✓	✓	✓	x	x	✓

3.2 How to use the microwave oven

Setting the time

When connecting the appliance for the first time or after a power failure, the flashing time 12:00 and the clock symbol appear on the display. The current time has to be set in order to start a cooking function:

1) Turn the knob to set the hour to the required value.
2) Confirm using the START/STOP button.
3) Repeat the procedure to set the minutes and confirm the selected time.

To set the current time and/or the display format (12h/24h) see "3.3 Settings Menu".

Selecting the cooking functions

To start using the microwave and select the cooking function:

1) Turn the knob to select the required function.
2) Confirm by pressing the START/STOP button to access the cooking settings available for the selected function (see specific table).
3) Turn the knob to adjust the parameters and press the START/STOP button to confirm.
4) When you have finished adjusting the selectable settings, press the START/STOP button to start.

This symbol indicates a plate suitable for use in a microwave oven (not supplied).

Function	Description	Settings	Accessory
	Microwave Quickly cook, defrost or heat food and drinks.	• Power • Cooking time	
	Grill Produces excellent grilling and gratinating results.	• Cooking time	
	Fan-assisted Gives you the same cooking results as a traditional oven.	• Temperature • Cooking time	
	Defrost Allows you to defrost frozen food in two ways: • **Auto Defrost**: allows you to choose between automatic programmes (see specific table) and set the weight of the food. The time is calculated automatically. • **Manual Defrost**: allows you to set the required defrosting time manually.	• Food weight (Auto Defrost) • Cooking time (Manual Defrost)	

Use

Function	Description	Settings	Accessory
	Warm Useful for reheating or keeping food warm.	• Cooking time	
	Air-Fry Useful for frying without oil or with a small amount of oil.	• Temperature • Cooking time	+
+	**Microwave + Grill** Combines microwave and grill cooking for faster grilling and browning.	• Power • Cooking time	
+	**Microwave + Fan-assisted** Combines microwave and fan-assisted cooking for faster oven cooking.	• Power • Temperature • Cooking time	
+	**Grill + Fan-assisted** Combines the grill and fan-assisted cooking for crispy and succulent results.	• Temperature • Cooking time	

Selecting Chef Menu functions

Various automatic programmes can be selected for each food category in the Chef Menu.

Once the type and weight of the food has been set, the appliance automatically selects the most appropriate cooking mode.

Slight variations in time are possible depending on the ingredients or cooking accessories used and the degree of cooking required.
We recommend that you always check the food at the end of the preset cooking time.

1) Press the Chef Menu button.
2) Turn the knob to select the food category.
3) Confirm using the START/STOP button.
4) Turn the knob to set the required programme. The recipe indicator P flashes.
5) Confirm using the START/STOP button.

Once the recipe has been selected, you can change the set weight (see "Changing the cooking settings").

6) Turn the knob to set the food weight.
7) Press the START/STOP button to start.

Category		Programme	Weight	Function	Accessory	Cooking tips
Meat and poultry	P01	Meat	150-600 g			Cover during cooking. Use slices no thicker than 3 cm. Cover and allow to rest before serving.
	P02	Chicken	150-600 g			Cover during cooking. Use slices no thicker than 3 cm. Cover and allow to rest before serving.
	P03	Bacon	4-8 pcs			-
	P04	Roast chicken	1-1.2 kg			-
	P05	Chicken wings	150-300 g		+	-
	P06	Chicken nuggets	300 g		+	-
Fish and shellfish	P07	Fish fillets (thick slice)	150-650 g			-
	P08	Fish fillets (thin slice)	150-650 g			-
	P09	Shrimps	250 g			Cover and allow to rest before serving.
	P10	Fish fingers (frozen)	300 g		+	-

Category		Programme	Weight	Function	Accessory	Cooking tips
Vegetables	P11	Potatoes	1-3 pcs			Pierce before cooking.
	P12	Hard vegetables	200-400 g			Cover during cooking.
	P13	Soft vegetables	200-400 g			Cover during cooking.
	P14	Frozen vegetables	250 g		+	-
	P15	Chips (frozen)	300 g		+	-
Cakes and sweets	P16	Popcorn	100 g			-
	P17	Melting	113 g			Recommended for butter and soft cheeses.
	P18	Mug cake	115 g			-
	P19	Cake	475 g			-
	P20	Muffins	740 g		+	-

Category		Programme	Weight	Function	Accessory	Cooking tips
Bread, pizza and cereals	P21	Toast	100 g		+	Turn half way through cooking.
	P22	Rice	200-600 g			Ratio to water = 1:1.8 Cover during cooking.
	P23	Pizza (reheating)	100-400 g			-
	P24	Pizza (frozen)	300 g			-
	P25	Lasagne/ Pasta bake	300-500 g			-

		Programme	Weight	Cooking tips
AUTO DEFROST	d01	Minced meat	125 - 500 g	Turn half way through cooking.
	d02	Meat	400 - 800 g	-
	d03	Fish	500 g - 1 kg	-
	d04	Vegetables	300 - 500 g	-
	d05	Bread	280 - 600 g	-

Changing the cooking settings

Each cooking setting can be changed by following the steps below:

Before you start cooking:

1) Turn the knob to select the required parameter.
2) Press the START/STOP button to confirm.
3) Turn the knob to set the required value.
4) Press the START/STOP button to move to the next parameter or to start cooking.

During cooking:

1) Press the START/STOP button to pause cooking.
2) Press the BACK button; the last parameter set will flash.
3) Turn the knob to change the value of the selected parameter.
4) Press the BACK button again to return to the previous parameters and change them using the knob.

Preheating

The fan assisted cooking, air frying and combined fan assisted cooking functions are always preceded by a preheating phase, which allows the appliance to reach the cooking temperature more quickly.

During this phase, the indicatorlights up .

To start cooking, press the START/STOP button at the end of the preheating phase.

If the dish has already been placed in the oven, the START/STOP button (13) has to be pressed in order for cooking to start, also after the preheating stage has finished.

End of cooking

If a cooking duration has been set, it ends automatically. The text End, appears on the display, the timer symbol flashes and a buzzer sounds, which can be switched off using the START/STOP button.

To end cooking manually and go back to the clock display, press and hold the START/STOP button for at least 3 seconds.

Quick Start Function

In clock mode, press and hold the PLUS button to activate the Quick Start function to start cooking immediately. The microwave function is activated for 30 seconds at maximum power.

+30 seconds function

During cooking, press the PLUS button to quickly increase the time in 30 second increments.

This function is not available for the automatic programmes in the Chef Menu and for the Auto Defrost and Auto Warm functions.

Multi-step Function

During the function selection phase, it is possible to set a sequence of up to 2 cooking functions that are automatically activated at the end of the previous function.

To add a sequence of functions:

1) After setting a cooking function (before starting to cook), press the PLUS button. The icons of the available cooking functions flash on the display.
2) Set the parameters for the second function.
3) Start cooking.

It is not possible to activate the multi-step function once cooking has started.

3.3 Settings Menu

The settings menu can only be accessed when the microwave is in clock mode.

1) Press and hold the START/STOP button.
2) Turn the knob to scroll through the menu items.
3) Press the START/STOP button to confirm the setting to be configured.
4) Press and hold the START/STOP button to save the setting and exit the menu.

Loc Child lock

This function allows the appliance to lock (On) the controls.

When the function is active, the indicator ⊶ lights up on the display.

To disable the function, go back to the Settings menu and select OFF.

Snd Sound

Enables (On) or disables (OFF) the sounds emitted by the microwave.

CLoC Clock format

Sets the time display to a 12 (12H) or 24 hour (24H) format.

Modifying the time

1) The clock icon appears on the display and the hours start to flash.
2) Turn the knob to the required value.
3) Confirm using the SET button.
4) Repeat the procedure to set the minutes.

unit Setting the units of measurement

Set the units of measurement for temperature and weight according to the following table:

Hardness level	Temperature	Weight
EU	°C	kg
US	°F	lb

brl Display brightness

This allows you to select the brightness of the display according to the following table:

Hardness level	Display brightness
1	25%
2	100%

turn Turntable setting

When enabled (On), the turntable is rotated to optimise cooking results.

Can only be deactivated (OFF) for cooking functions that do not use microwave mode.

It does not affect the automatic programme settings of the Chef Menu.

Function	Turntable (Default)	Modifiable
	On	x
	On	✓
	On	✓
	On	x
	On	x
	On	✓
+	On	x
+	On	x
+	On	✓

4 Cleaning and maintenance

The instructions manual contains cleaning and maintenance instructions and recommendations from the manufacturer to the customer. Any other intervention should be carried out by an authorised service centre.

Before cleaning, ALWAYS remove the plug from the mains power supply and allow the appliance to cool down.

Caution

- Do not use steam jets to clean the appliance.
- Do not use cleaning products containing chlorine, ammonia, bleach or alcohol on steel parts or parts with a metallic surface finish.
- Do not use abrasive or corrosive detergents.
- Do not use rough or abrasive materials or sharp metal scrapers.
- Clean the components and accessories regularly after each use.

Cleaning the surfaces

To keep the surfaces in good condition, they should be cleaned regularly after use. Let them cool first.

Ordinary daily cleaning

Always and only use specific products that do not contain abrasives or chlorine-based acids.

Pour the product onto a damp cloth and wipe the surface, rinse thoroughly and dry with a soft cloth or a microfibre cloth.

Food stains or residues

Do not use steel sponges and sharp scrapers as they will damage the surface.

Use normal, non-abrasive products and a wooden or plastic tool, if necessary. Rinse thoroughly and dry with a soft cloth or a microfibre cloth.

Do not allow residues of sugary foods (such as jam) to set inside the oven. If left to set for too long, they might damage the enamel lining of the appliance.

Cleaning the accessories

Wash all accessories in warm soapy water with a soft sponge or a soft cloth. Rinse and dry thoroughly. Do not use abrasive detergents, metallic sponges or metal tools to clean the accessories as they may damage the surfaces.

Cleaning the door glazing

The glass in the door should always be kept perfectly clean. Use absorbent kitchen roll. In case of stubborn dirt, wash with a damp sponge and an ordinary detergent.

Cleaning the oven cavity

In order to keep your oven in the best possible condition, clean it regularly after letting it cool down.

Avoid letting food residue dry inside the oven cavity, as this could damage the enamel.

What to do if...

Problem	Possible cause	Solution
The microwave oven does not switch on.	The plug has not been properly inserted into the power socket.	Make sure the plug has been inserted properly into the power socket.
	Possible cable or electronic board failure.	Contact your local service centre.
	No power.	Make sure that the power supply is working properly. If the problem persists, contact a qualified electrician.
The oven light does not switch on.	The plug has not been properly inserted into the power socket.	Make sure the plug has been inserted properly into the power socket.
	The light bulb or microwave oven door sensor may be faulty.	Contact your local service centre.
Cooking does not start.	No confirmation.	Make sure that you confirm the cooking phase when you have set the required values (see "3.2 How to use the microwave oven").
	The microwave door is not closed.	Make sure that the microwave door is closed.
	The microwave oven door sensor may be faulty.	Contact your local service centre.
The turntable does not rotate or makes a noise during operation.	The plate is not positioned correctly on the support.	Make sure that the plate is correctly positioned.
	The support is not inserted correctly.	Make sure that the support is inserted correctly.

What to do if...

Problem	Possible cause	Solution
There are sparks and crackles inside the microwave during cooking.	Cookware with metallic finishes were used.	Make sure that you only use containers that are suitable for microwave cooking.
	Forks or other metal utensils have been left inside the microwave.	
	Aluminium foil has been used inside the microwave oven.	
Hot air or steam escapes around the door or from the vents during use.	It is normal for hot air to escape from above the door to cool the oven during use.	Wait for the appliance to cool down normally. If hot air or steam continues to escape, or if it escapes from other parts of the oven, contact your local service centre.
One of the following error codes appears on the display: **E-01 / E-02 / E-03 / E-04 / E-05 / E-06 / E-07 / E-08 / E-09 / E-10.**	-	Contact your local service centre.

If the problem has not been resolved or in the case of other types of fault, contact your local technical support centre.

MY SMEG
ASSISTANT

Scan the QR code for quick access to the My Smeg Assistant portal
امسح رمز الاستجابة السريعة من أجل الوصول سريعًا إلى بوابة **My Smeg Assistant**

Notes

The manufacturer reserves the right to make any changes deemed necessary for the improvement of its products without prior notice. The illustrations and descriptions contained in this manual are therefore not binding and are merely indicative.

عميلنا العزيز، شكرًا لك على شراء أحد أجهزتنا. تعد منتجاتنا فريدة لأنها تجمع بين الأسلوب المميز والحلول التقنية المبتكرة. وهي تتناسب تمامًا مع المنتجات الأخرى في مجموعتنا وتعمل بنفس القدر كتصميمات قائمة بذاتها في مطبخك. نأمل أن تستمتع باستخدام هذا الجهاز الجديد! وتفضلوا بقبول وافر الاحترام والتقدير.