OWNER'S MANUAL

TRAVELER RV CAMPING SERIES™

C10-601T • C10-603T • C10-601T-CSA • C10-603T-CSA

STOP
Before returning this item to the dealer.

For questions regarding performance, assembly, operation, parts, or returns, contact the experts at MAGMA by calling **(562) 627-0500** 7:00 a.m. - 4:00 p.m. Pacific Time Monday thru Friday or e-mail us at mail@MagmaProducts.com

Conforms to ANSI Std Z21.72
Certified to CSA Std 11.2

C ETL US LISTED
Intertek

MAGMA USA

IMPORTANT, read these instructions carefully before use. Familiarize yourself with the appliance before connecting it to its gas container. Keep these instructions for future reference.

IMPORTANT SAFETY WARNINGS

READ ALL INSTRUCTIONS BEFORE OPERATING.

- USE OUTDOORS ONLY. NEVER USE UNDER AWNINGS, PATIO COVERS, ETC.
- NOT FOR USE ON BOATS OR MARINE APPLICATIONS
- DO NOT USE THIS APPLIANCE INSIDE ANY ENCLOSED SPACE.
- GRILLS RADIATE HEAT. CLEARANCE FROM COMBUSTIBLES, 24" (61 cm) SIDES AND BACK.
- USE PROPANE GAS ONLY. FUEL STORAGE SHOULD BE IN COMPLIANCE WITH THE NATIONAL FIRE PROTECTION ASSOCIATION (NFPA) STANDARD 58 LIQUID PETROLEUM GAS CODE AND OCCUPATIONAL HEALTH AND SAFETY ADMINISTRATION (OSHA) STANDARD 29 CFR 1910.101
- FOR NATURAL GAS APPLICATION CONTACT MAGMA.
- ALWAYS LIGHT GRILL WITH LID OPEN.
- NEVER LEAVE HOT GRILL UNATTENDED.
- DO NOT OVERHEAT GRILL, SEE OPERATING INSTRUCTIONS
- ALWAYS TURN GRILL OFF AFTER USE.
- USE GLOVE OR HOT PAD WHEN HANDLING HOT GRILL.
- NEVER LEAVE GAS CYLINDERS AND REGULATOR CONNECTED WHEN STORED.
- STORE GAS CYLINDERS IN A SECURE WELL VENTILATED AREA, OFF OF THE GROUND, ON A NON-COMBUSTIBLE BASE.
- DO NOT STORE GAS CYLINDERS INDOORS, IN DIRECT SUNLIGHT, OR IN LOCKERS NOT APPROVED FOR BUTANE OR PROPANE STORAGE.
- CAUTION: CHECK FOR GAS LEAKS EACH TIME CYLINDER IS CHANGED.
- NEVER CHECK FOR GAS LEAKS WITH A FLAME!
- DO NOT BLOCK, RESTRICT, OR OTHERWISE OBSTRUCT COMBUSTION OR VENTILATION AIR OPENINGS.
- DO NOT MODIFY THIS APPLIANCE.
- KEEP AREA CLEAR OF COMBUSTIBLE MATERIALS, GASOLINE, AND OTHER FLAMMABLE VAPOURS AND LIQUIDS.
- ENSURE VALVE SEALING WASHER **(A)** IS IN PLACE AND IN GOOD CONDITION BEFORE CONNECTING FUEL.
- INSTALL CANISTERS IN WELL VENTILATED AREA AND AWAY FROM OPEN FLAME, HEAT SOURCE OR SPARKS. KEEP AWAY FROM OTHER PEOPLE OR FLAMMABLE MATERIALS.

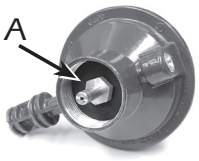

Each Magma® Gas Grill is individually fire tested before it leaves the factory. For this reason, the burner on your grill may be slightly discolored.

FOR YOUR SAFETY
If you smell gas:
1. Do not attempt to light appliance.
2. Extinguish any open flame.
3. Disconnect from fuel Supply.

POUR VOTRE SÉCURITÉ
Que faire si vous sentez une odeur de gaz:
1. Ne pas tenter d'allumer d'appareils.
2. Éteindre toute flamme.
3. Couper l'alimentation en gaz à la source.

FOR YOUR SAFETY
Do not store or use gasoline or other liquids with flammable vapours in the vicinity of this or any other appliance.

POUR VOTRE SÉCURITÉ
Ne pas entreposer ni utiliser d'essence ni d'autres vapeurs ou liquides inflammables à appareil.

⚠DANGER

CARBON MONOXIDE HAZARD

This appliance can produce carbon monoxide which has no odor.

Using it in an enclosed space can kill you.

Never use this appliance in an enclosed space such as a camper, tent, car or home.

⚠DANGER

MONOXYDE DE CARBONE

Cet appareil peut produire du monoxyde de carbone, un gaz inodore.

L'utilisation de cet appareil dans des espaces clos peut entraîner la mort.

Ne jamais utiliser cet appareil dans un espace clos comme un véhicule de camping, une tente, une automobile ou une maison.

INSTALLATION INSTRUCTIONS

CONTROL VALVE REGULATOR

- Uses standard 1 lb. disposable propane canisters (DOT-39 NRC).
- Prior to installing valve, become familiar with the valve function and graphics on valve knob. Never force the knob. Always turn or push gently.
- Turn control valve to "lock" and install gas canister being careful not to cross the threads. Check for leaks prior to use, by brushing soapy water solution around threads and orifice hole checking for bubbles.
- Position valve with gas bottle as shown **(A)**. Gently insert valve stem into valve chamber. Rotate until valve stem key aligns with lock detent allowing valve to fully insert. Rotate gas canister down, so knob faces you **(B)** or straight up **(C)** depending on application.

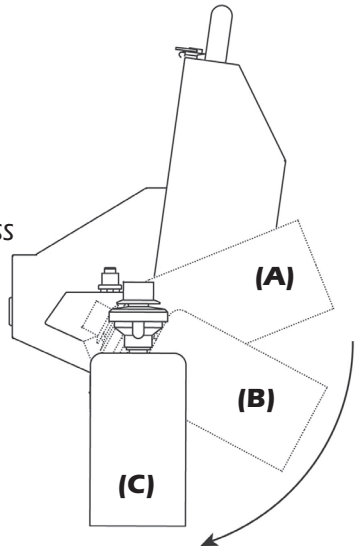

Valve will feel loose and will rotate easily. Even though the valve feels loose, it will not leak. The valve was designed to be loose fitting in order to allow safe, easy installation and removal of the propane canister and so it easily swings without resistance to fit all applications.

MOUNT HARDWARE

Fasteners are supplied for Single Mount option. See Magma Website for details.

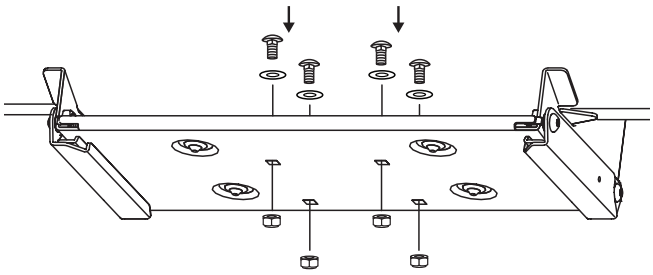

Single mount through-bolt applications
4 Carriage bolts, washers & lock nuts.
Note: Place washers on carriage bolts as shown above.

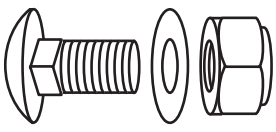

Carriage bolt, washer & lock nut

See Magma website for replacement part numbers and valve applications. **MagmaProducts.com**

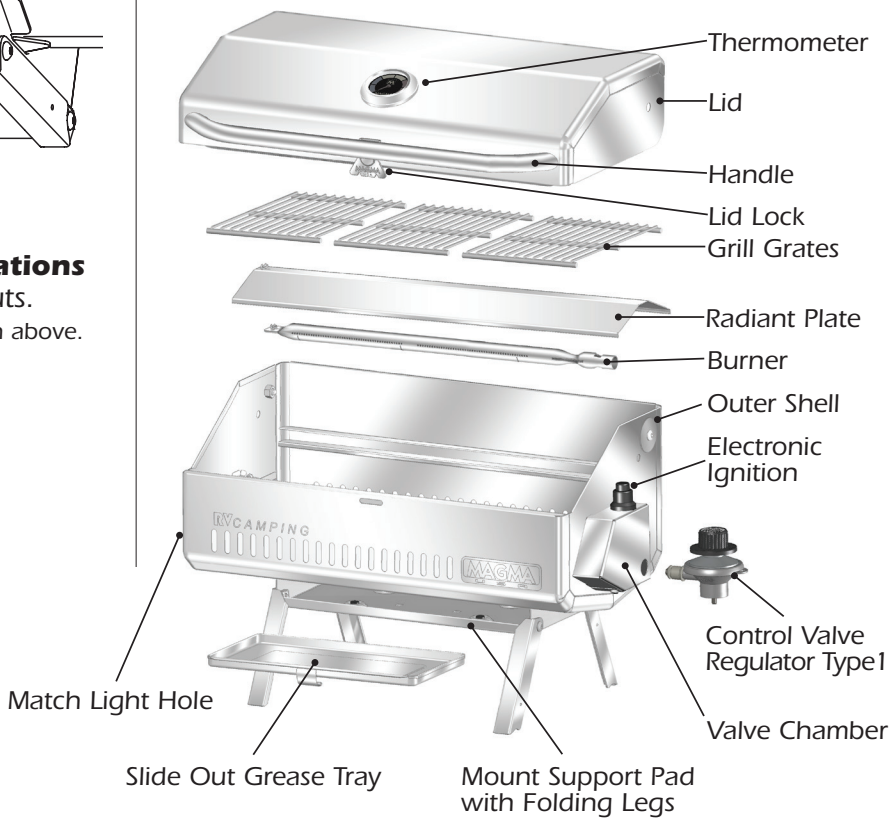

OPERATING PROCEDURES

OPERATE ONLY ON "LOW" WHEN LID IS CLOSED.
ALWAYS OPERATE WITH GREASE TRAY IN PLACE.

WARNING: Do not overheat grill. Magma Grills do not require pre-heating. Stainless Steel loses anti-corrosive characteristics when subjected to extreme heat. Most grilling is done on low temperature with the lid closed. If medium or high heat is required, grill with lid open.

LIGHTING INSTRUCTIONS

- Open lid during lighting.
- Depress knob and rotate counter-clockwise to the "HIGH" flame position.
- Push Electronic Igniter. ▪ Visually confirm ignition. ▪ Turn knob to adjust flame.
- If grill does not light (see page 7).
- If electronic ignition fails to ignite the gas, see MATCH LIGHTING INSTRUCTIONS.

NOTE: Before lighting, lid lock must be positioned not to engage. Open lid and turn lock to locked position.

NOTE: Electronic ignition comes equipped with battery pre-installed. Replace with "AAA" alkaline battery only.

MATCH LIGHTING INSTRUCTIONS

(Back up system allows use of grill until ignition system is repaired.)

- Open lid during lighting. ▪ Place flame up to burner through the match light hole.
- Depress valve and turn counter-clockwise to the "HIGH" flame position.
- Visually confirm ignition.

TO REDUCE FLARE-UP

- Empty and clean grease tray prior to each use.
- Trim excess fats from meat.
- Reduce heat.
- Use non-oil based marinades.
- Use water spray directly on flare-ups.

FOLDING LEGS

For storage, transport or while using mounting option. Fold up back legs first, then front legs (as shown). If legs become loose they can be tightened with a 5/32" Hex Key Wrench.

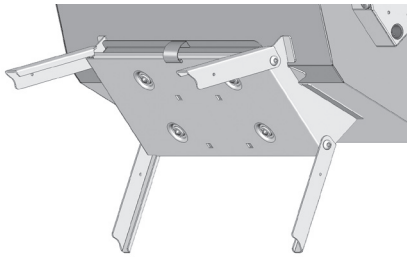

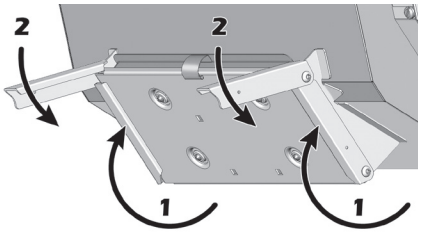

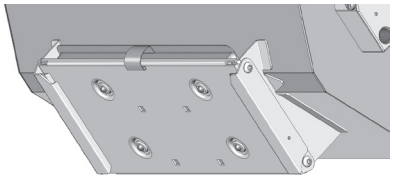

PRACTICAL HINTS

Before lighting your grill, be sure that...

- Grill is secure and properly mounted.
- Internal components and grease tray are clean and correctly positioned.
- You have plenty of gas in the canister.
- Gas canister is attached properly and there are no gas leaks.
- Lid lock has been set not to engage.
- You have a water spray bottle handy to cool a hot grill or stop any flare-ups.

STOWING TIPS

- Always disconnect the fuel canister from the valve prior to stowing.
- Stow the valve in a clean, dry area to protect from corrosion to valve.
- Always store propane in a sealed propane storage locker that allows leakage to vent or use **Magma Propane / Butane Storage Locker / Tote Bag.**

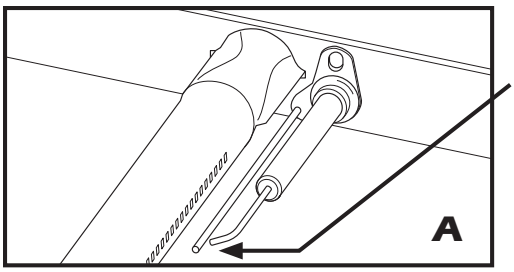

ELECTRODE SPARK ADJUSTMENT

CAUTION: Spark can cause small shock. Do not leave fingers on or near electrode wire while engaging igniter.

- Electrode wire should be approximately 1/8" from gas exit hole in burner. Carefully adjust wire if required.

DISASSEMBLY & RE-ASSEMBLY

- Remove radiant plate's retainer pin (see B) and remove radiant plate by sliding it out of securing tabs (see E).
- Remove burner retainer pin (see C), remove burner. Inspect burner, remove obstructions. CAUTION: WHEN REPLACING BURNER, CUT SLOTS IN BURNER MUST FACE DOWN.
- Remove lid by removing hinge screws and nuts with 3/16" hex key wrench (supplied) and 1/2" wrench or pliers. CAUTION LOCK NUTS MUST BE INSTALLED WITH LOCKING INDENT MARKS SHOWING (see F). IMPROPER INSTALLATION WILL DAMAGE HINGE SCREWS AND LOCK NUT.
- Clean as indicated in Maintenance (page 6).
- To disconnect or replace igniters ceramic electrode. First remove two screws on valve chamber (see D) and remove cover plate. Gently pull wire off connector (see D). Remove electrode screw and nut with a small Phillips head screwdriver and 1/4" wrench or pliers. Gently pull electrode with wire out of grill body inspect for damage, replace if necessary.
- To re-assemble, reverse above procedure.

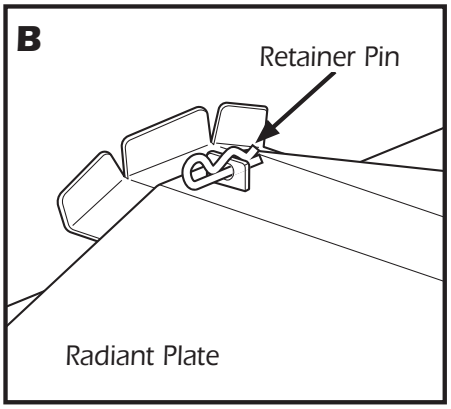

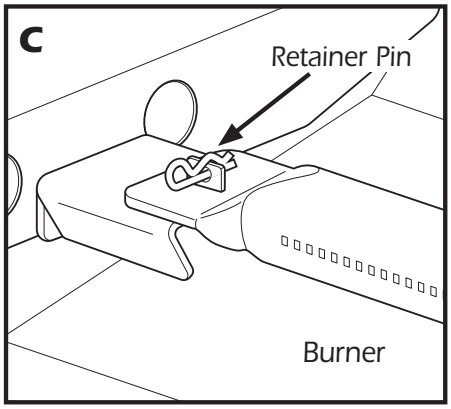

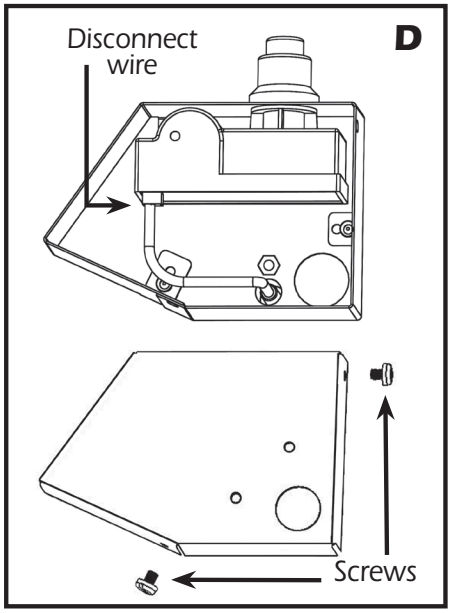

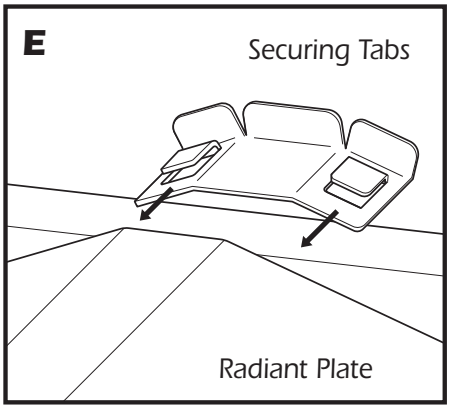

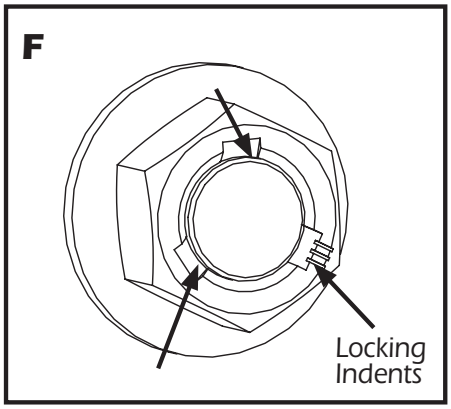

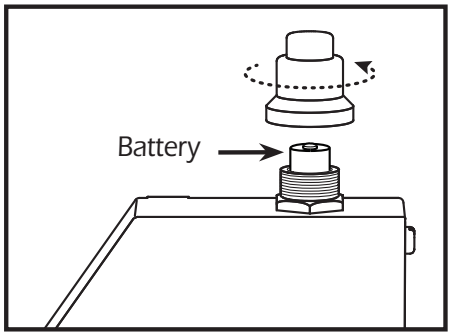

MAINTENANCE

Stainless steel contrary to popular belief can rust. Most commonly, deposits on surface of the product will trap moisture. It is this moisture that robs stainless steel of oxygen. Oxygen is the element that reacts with stainless steel to form a protective layer of chrome oxide. Robbed of oxygen, this reaction does not take place and "crevice corrosion" or "surface rusting" occurs. To minimize this effect, thoroughly clean your grill with soap and water, rinse with fresh water, and dry. Avoid using stainless steel polishes on grill exterior as most leave a residue that may discolor when grill is heated.

Additionally, stainless steel that is exposed to high heat will change color and texture over time. The "amber" color of grill exterior and internal components is not a failure of the stainless steel and will not affect products operation. When this happens, we recommend using "**Magma Magic**" **Grill Restorer** to remove the "amber" color and return grill to its original luster. However, prolonged exposure to extreme high heat will cause chromium and nickel to "burn out" of stainless steel. At this point stainless steel will become more susceptible to corrosion and will start to deteriorate. We recommended replacement of internal components as they become seriously deteriorated.

We recommend thoroughly cleaning grill and internal components after each outing. Disassemble interior components and remove all food residue. Use a "Scotch-Brite" pad or similar product and "Easy-Off" oven cleaner for cleaning grills interior components, followed by thoroughly washing with soap and water, rinse with fresh water & dry. AVOID CONTACT OF OVEN CLEANER WITH SKIN, CONTROL VALVE, IGNITOR ELECTRODE & WIRE. CAUTION: DO NOT USE ANY TYPE OF ABRASIVE PAD ON EXTERIOR MIRROR FINISH AS IT WILL SCRATCH SURFACE, USE ONLY A SOFT CLOTH. We recommend covering grill between uses. Grill covers are available at Magma retailers or directly from Magma. See our website: **MagmaProducts.com.** After cooking Do Not turn grill to high heat to burn off grilling residue. The grill is not a self cleaning oven & this extreme heat can damage stainless steel components.

Grill Grates - Clean with brass wire brush while grill is warm. Use Oven & Grill cleaner for burnt-on residue. Wash with soapy water and dry prior to storage.

Ceramic Electrode - Located just beside the burner, it should be kept clean of grease and debris. Be careful not to damage the ceramic insulation or the wire. See page 5 for electrode spark adjustment.

Control Valve - All valves are set and tested at our factory. Do not attempt to adjust or disassemble the valve in any way. Call Magma if you suspect it is not adjusted properly. Clean valve with a cloth and remove any debris obstructing the orifice.

Repair/Replacement Parts - All replacement parts are readily available at your Magma Retailers or directly from Magma. For a complete list of replacement parts visit our website **MagmaProducts.com.**

USING GRILL WITH LPG (PROPANE) SYSTEMS

- Magma LPG (Propane) Valves & Hose Kit allow Magma Grills to be installed within an existing, pre-regulated low pressure LPG (Propane) System.
- Use only **Magma Type 3 Low Pressure LPG (Propane) Valves.** See our **Valve Application Guide** at **MagmaProducts.com** for correct valve.
- In North America, use **Magma A10-228 LPG Hose Kit** in conjunction with **Type 3 Valve.** Outside North America, check with your local dealer for proper hose and fittings.
- A primary shutoff valve must be used with this control valve at point of connection. This allows shut off of gas supply to hose leading to grill.

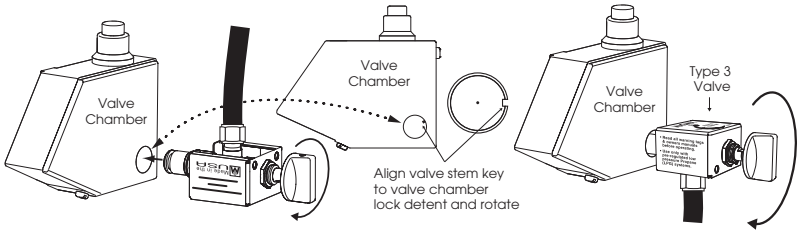

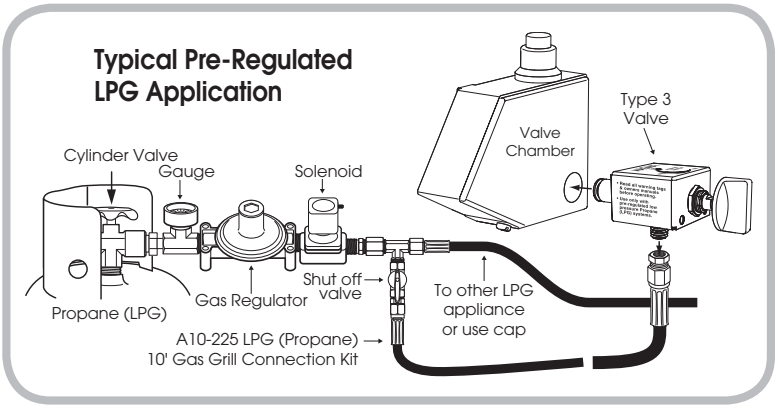

USING GRILL WITH CNG (NATURAL GAS) SYSTEMS

- Magma on-board CNG (natural gas) valves allow Magma grills to be installed to an existing on-board, pre-regulated low pressure CNG (natural gas) system.
- Use only Magma Type 4 Low Pressure CNG (natural gas) control valves. Visit out website at **MagmaProducts.com** to view valve application guide. See your local dealer for proper hose and fittings.

TROUBLESHOOTING GUIDE

Problem	Possible Cause	Possible Solution
Burner Will Not Light With Igniter	Electrode covered with grease or residue	▪ Clean electrode
	Igniter/electrode too far from burner	▪ Adjust electrode until proper spark appears (See page 5)
	Electrode wire loose, disconnected, or corroded	▪ Clean, adjust & reconnect wire between igniter & electrode, see Complete Disassembly (See page 5)
	Wire is shorted causing spark from wire before electrode	▪ Replace Igniter, Electrode & Wire See website for part number
	No spark being generated	▪ Adjust electrode until proper spark appears ▪ Unscrew igniter push button, remove/inspect "AAA" battery, replace "AAA" alkaline battery if necessary, reinstall & re-assemble push button ▪ Replace Igniter, Electrode & Wire See website for part number
Burner Will Not Light Even With Match	No gas flow	▪ Check fuel level, replace canister or refill cylinder
	Obstructed gas flow	▪ Clean burner and valve orifice. Remove debris/spider webs
Flare-Up	Excessive cooking temperature	▪ Operate only on low when lid is closed ▪ Reduce flame level ▪ Leave lid open ▪ Use water spray to cool
	Grease and/or residue build-up	▪ Clean components
	Excessive fat in meats	▪ Trim fat from cuts of meat before grilling
	Excessive oils in marinades	▪ Use non-oil based marinades
Blow-Out	Flame too low	▪ Increase flame
	Wind directly on burner	▪ Block wind when opening lid
	Obstructed gas flow	▪ Clean burner and valve orifice. Remove debris/spider webs
Hot Spots	Grill not level	▪ Level Grill
	Grease or residue build-up	▪ Clean components
	Excessive fat in meats	▪ Trim fat from cuts of meat before grilling
	Excessive oil in marinades	▪ Use non-oil based marinades

CONTENTS

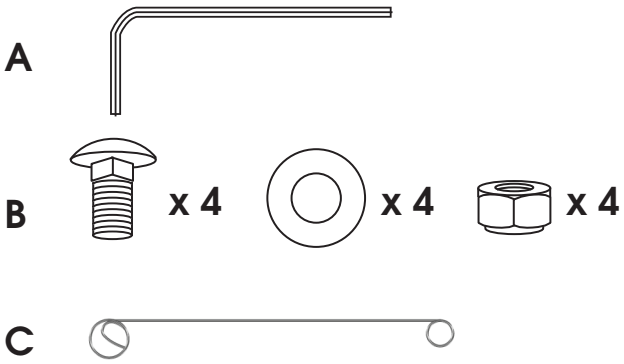

A) (1) 3/16" Hex key wrench for lid removal.
B) Pack of (4) 1/4"-20 x 5/8" carriage bolts and lock nuts for mounting applications.
C) Match Light Holder (included with CSA Models only)

LIMITED WARRANTY

Magma Products, Inc. guarantees this product to be free from defects in materials or workmanship to the original consumer. This guarantee is for the periods herein specified when used under normal and reasonable conditions, one (l) year from the date of original purchase. This warranty does not include the cost of property damage or any inconvenience due to the failure of the product. Nor does it cover damage due to misuse, abuse, accident, or damage resulting from transportation of the product. Nor does it include damage resulting from the commercial use of this product. Nor does it include, on stainless steel products, "Surface Rust'; Excessive Corrosion due to exposure to salt water; or Discoloration or Corrosion caused by exposure to excessive heat or failure to properly clean and care for the stainless steel surfaces. If the product fails to operate due to a defect in materials or workmanship during the warranty period, the defective part will be repaired or replaced at Magma's option. If you wish to obtain performance under this limited warranty, you should contact Magma's Customer Service Department via telephone at (562) 627-0500, or via e-mail at mail@MagmaProducts.com, or via U.S. Postal Service mail at "Magma Products, Inc., Attention Customer Service, 3940 Pixie Ave. Lakewood, CA, 90712". The defective part, along with proof of purchase, must be returned postage prepaid to Magma Products, Inc. We suggest that you keep your purchase receipt as we may require reasonable proof of purchase.

In the state of California only, if refinishing or replacement of the product is not commercially practicable, the retailer selling the product, or Magma Products, Inc., will refund the purchase price paid for the product, less the amount directly attributable to use by the original consumer prior to the discovery of the nonconformity. In addition, in the state of California only, you may take the product to the retail establishment from which it was purchased or to any retail establishment selling this product in order to obtain performance under this warranty. All implied warranties, including the implied warranties of merchantability and fitness for a particular purpose, are limited in duration to the express warranty periods specified herein for the parts described herein. Some states do not allow limitations on how long an implied warranty lasts, so the above limitation may not apply to you. Neither Magma dealers, nor the retail establishment selling this product has any authority to make any warranties or to promise remedies in addition to or inconsistent with those stated above. Magma's maximum liability shall not exceed the purchase price of the product paid by the original consumer. Some states do not allow the exclusion or limitation of incidental or consequential damages, so the above limitation or exclusions may not apply to you. The warranty gives you specific legal rights and you may also have other rights which vary from state to state.

MAGMA and the Magma logo are registered trademarks of Magma Products, Inc. ▪ Traveler RV Camping Series is a trademark of Magma Products, Inc. ▪ Patent pending.

CALIFORNIA PROPOSITION 65 – WARNING – The burning of gas cooking fuel generates some by-products, which are on the list of substances, which are known by the State of California to cause cancer or reproductive harm. California law requires businesses to warn customers of potential exposure to such substances. To minimize exposure to these substances, always operate this unit according to the use and care manual, ensuring you provide good ventilation when cooking with gas.

MAGMA®
USA

Magma Products, Inc.
3940 Pixie Avenue, Lakewood, CA 90712 • USA
Phone (562) 627-0500 • mail@MagmaProducts.com
MagmaProducts.com

83-600T 0319