INFINITY

# Wall Unit

## 700 - 1000 Wall (Door, Solid Top)(2 Door) - Fitting Guide

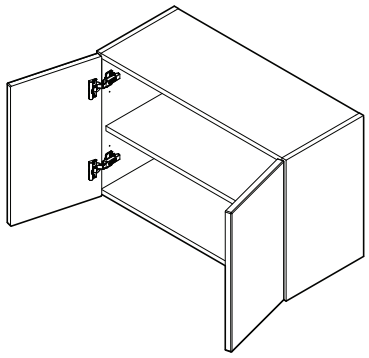

575hx800w

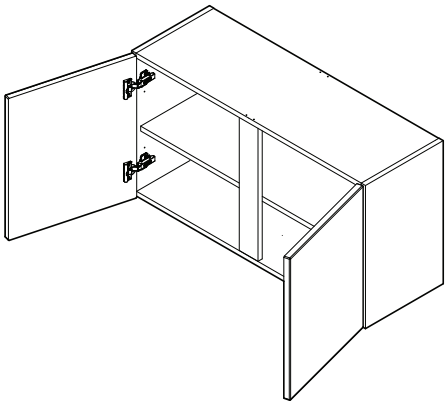

575hx1000w

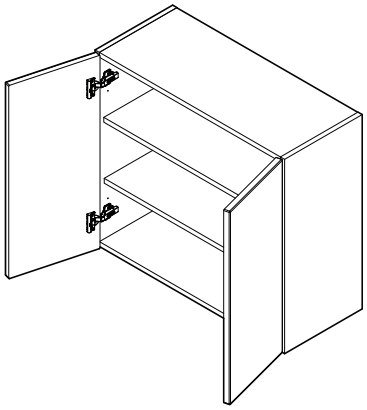

720hx700-800w

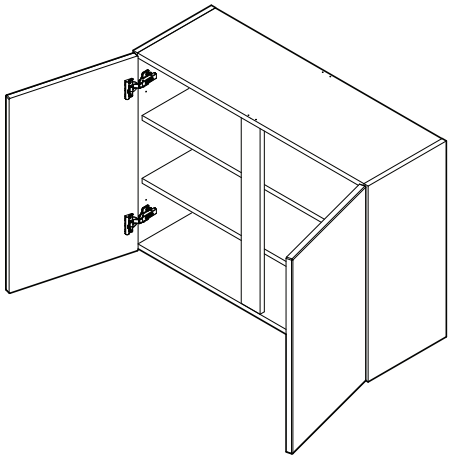

720hx900-1000w

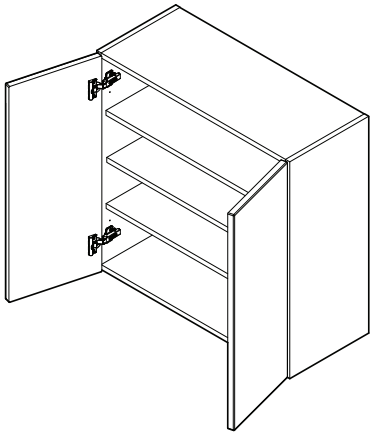

900hx700-800w

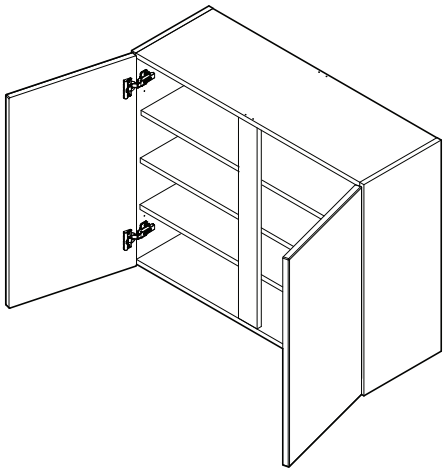

900hx900-1000w

## Unit Parts

8x
15mm Screws

10x
20mm Screws

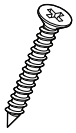

4x
30mm Screws

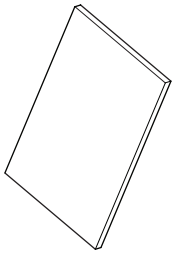

Shelves

Shelf
Supports

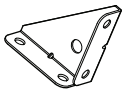

2x
Corner Gusset
Plates

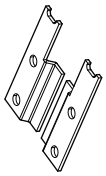

1x
Wall Hanging
Plate
Snap off (x2)

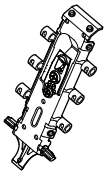

2x
Wall Hanging
Brackets

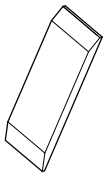

2x
Hanging Bracket
Cover Caps

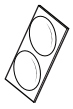

2x
Door Buffers

## Tools Required

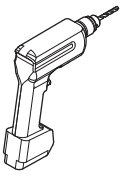

Drill

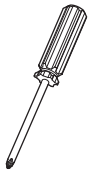

Screwdriver

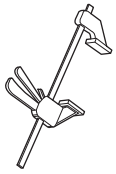

Clamp

Spirit Level

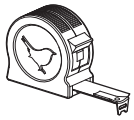

Tape Measure

**Before installing any wall cabinets, ensure the wall construction is strong enough to support the weight of the fully loaded unit and that appropriate fixings are used. Wall cabinets must be fully secured using all supplied hanging brackets and corner gussets, as specified in the installation guide.**

**If you are unsure, seek professional advice before proceeding.**

Remember to take care when unpacking. Please keep your workspace clean, clear and tidy when working. This will help keep all items safe from any damage. Any un-needed cardboard or plastic should be flattened down and placed in the bin.

A minimum of two people will be needed to lift the unit.

## Removing the frontals

Before installing the unit, remove the frontal by pulling the release catch.

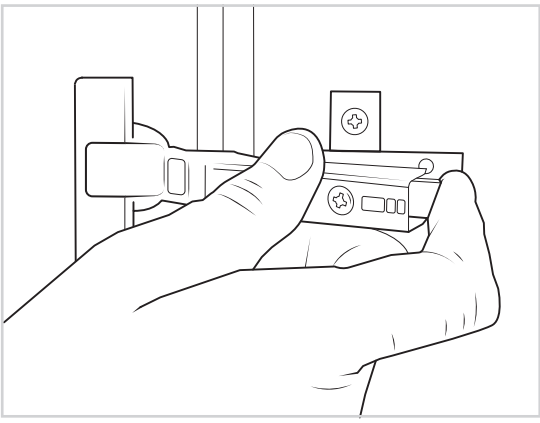

## Removing the fittings

Remove all content so the unit is empty.

All fittings should be kept on a clean and level surface.

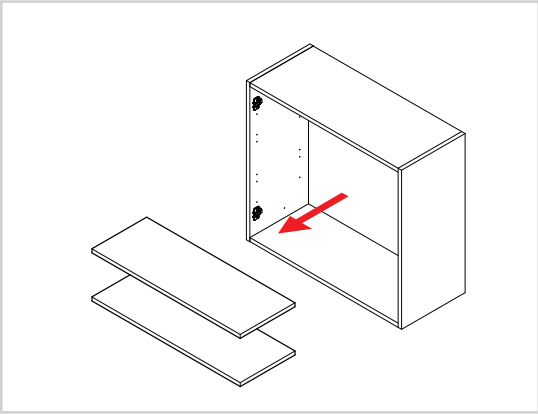

**The next few steps will take place on the back of the wall unit.**

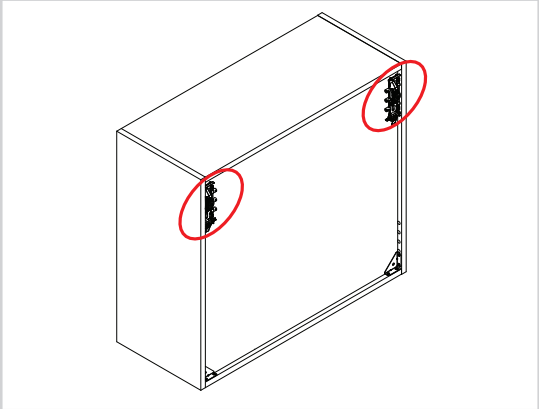

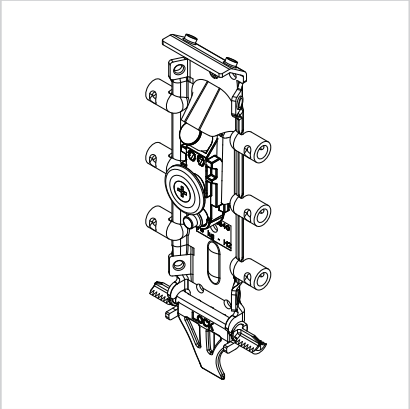

**Installing the wall hanging bracket**

Insert the hanging bracket into pre-drilled holes.

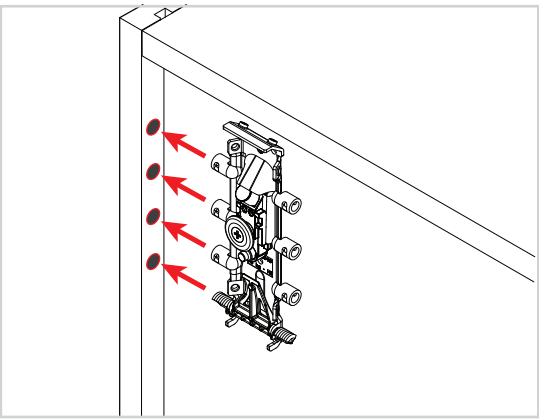

Rotate the locking lever down **180 degrees.**

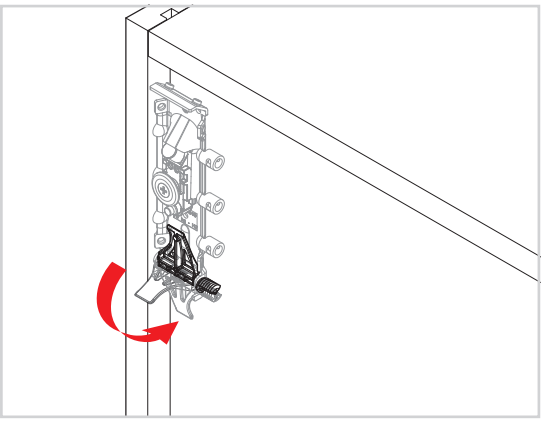

Secure with provided **2x20mm** screws per bracket.

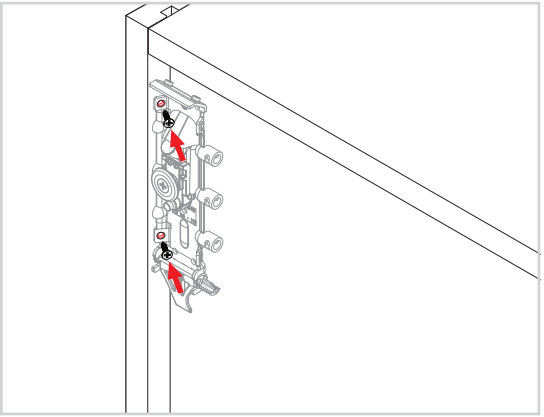

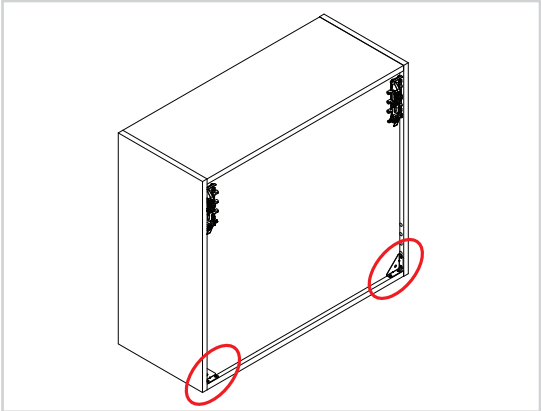

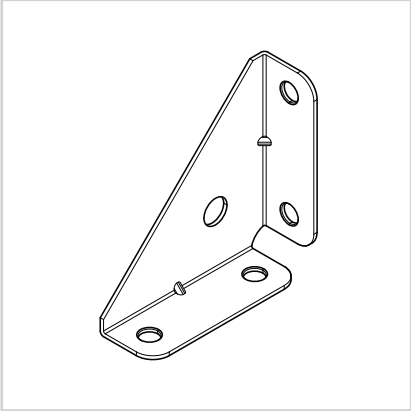

## Installing the corner gussets

Secure the corner gussets to both the bottom corners of the wall unit using **4x15mm** screws per gusset.

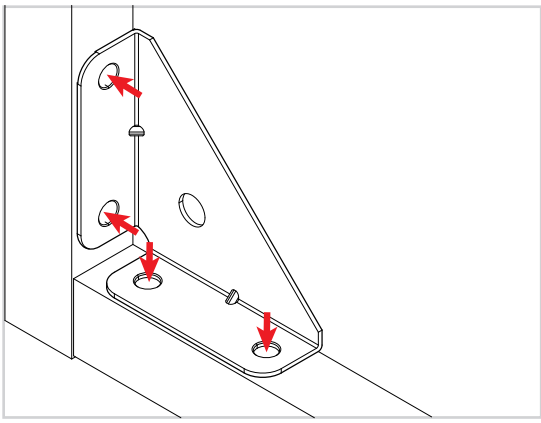

## Creating the pilot holes

Drill a small pilot hole through the back panel of the unit through the gusset.

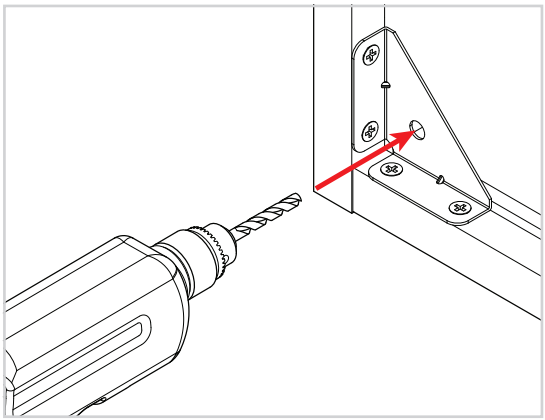

## Finding the fixing point for the wall brackets

The fixing points for the wall hanging brackets are **125mm** below the top of the units.

Draw a line on the wall **125mm** below the top line of the unit (Already marked).

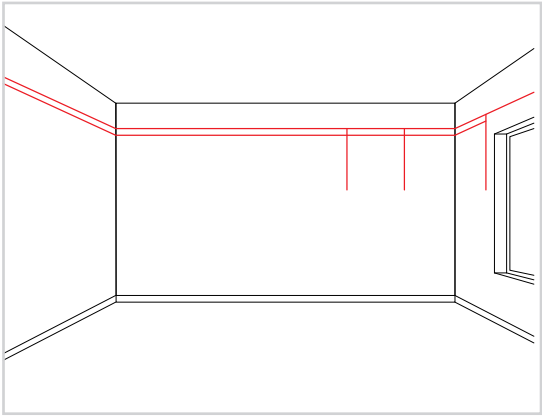

Draw a vertical line **20mm** inside either side of the pre marked wall unit positions.

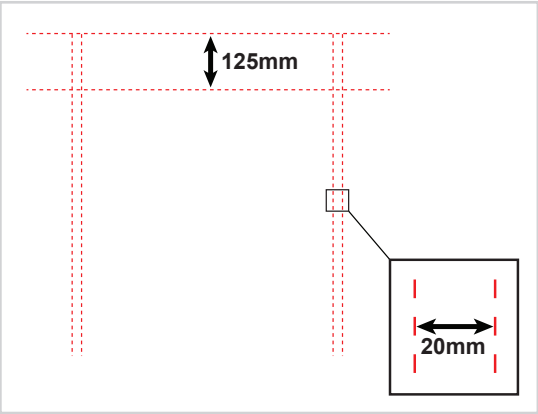


## Snapping the wall hanging plate

Bend the wall hanging plate down the middle until it snaps into two pieces.

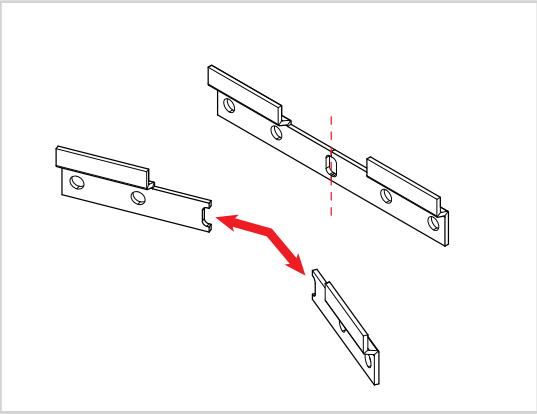

**No screws or wall plugs are provided for attaching the unit to the wall. This is due to variations in wall construction.**

**Before drilling into the wall you MUST check for any hidden services or pipework within the walls.**

## Attaching the wall hanging brackets to the wall

Position the **2x** hanging brackets as shown and mark the holes onto the wall.

Remove the hanging brackets, then drill holes into the wall of an appropriate size for the screws required.

Attach the hanging brackets onto the wall by screwing through the holes on the hanging bracket into the holes on the wall.

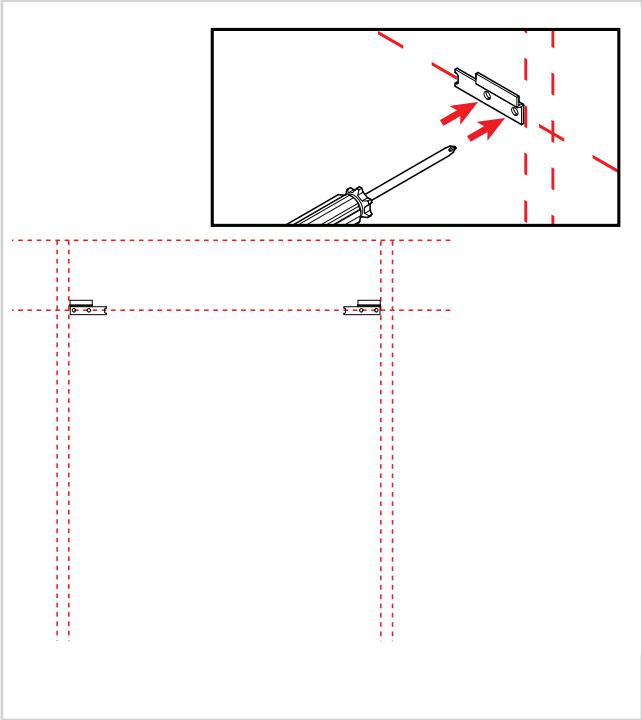

**In order for to complete the steps below the red screw found on the wall unit on the hanging bracket will need to be screwed all the way out.**

## Lifing the unit into place

Lift the unit against the wall slightly higher than its finished height. Lower the unit down onto the wall hanging bracket.

Before releasing the unit, gently tug it to ensure it is securely supported by the hanging brackets.

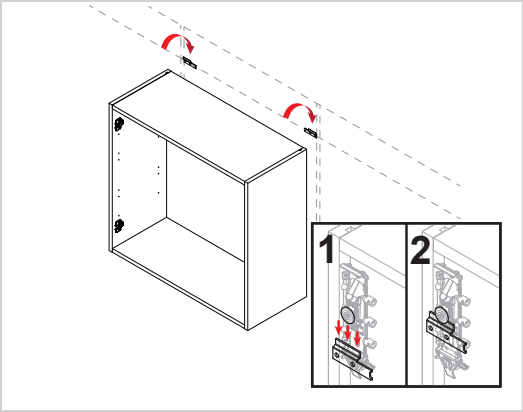

## Adjusting the wall brackets

Using the points below to adjust the unit to suit.

Place the cover caps on once adjustments have taken place.

**A**- Rotate the screw clockwise to move the unit up. Anti-clockwise for down.

**B**- Adjust the depth using centre screw.

**C-** Screw the red screw until it touches the plate to lock in position.

Place cover caps over the wall brackets.

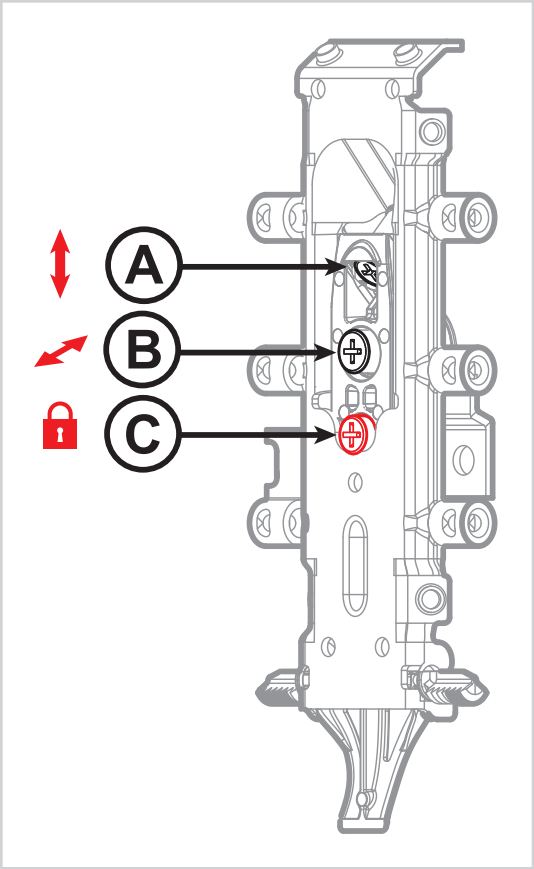


**Double check units are level after adjustments.**
**Use a spirit level to ensure the units are level front to back, left to right and diagonally.**

**No screws or wall plugs are provided for attaching the unit to the wall. This is due to variations in wall construction.**

**Before drilling into the wall you MUST check for any hidden services or pipework within the walls.**

## Fixing the wall unit to the wall

Fix the unit to the wall through the gussets using the appropriate screws to attach to the wall.

Use cover cap to conseal the screws.

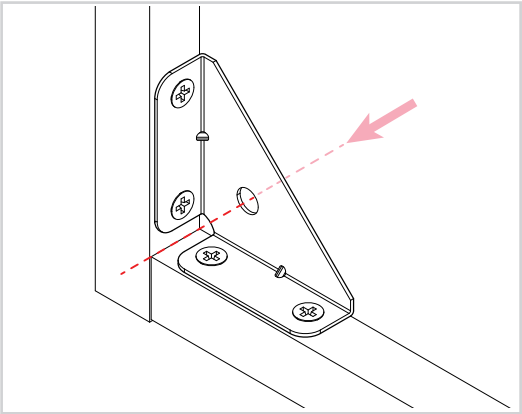

## Securing to adjacent units

Clamp together the two units, checking the front edges are level and flush.

Using the screws provided, **1x30mm** screw should be fixed into each corner of the carcase side.

The screws can be concealed by placing them behind the shelf or behind the hinge plates. The cover caps can be used to hide any visible screw heads that remain.

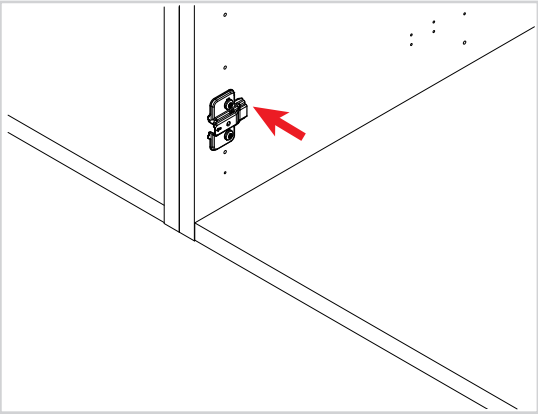

## Placing the shelf into position

Position the shelf pegs into the pre-drilled holes.

Place the shelves into position so the pin of the shelf peg is inserted into the pre-drilled holes.

The shelves will touch the back panel when installed, if there is a gap between the back panel and shelf then the shelf has been installed back to front and the shelf needs to be rotated.

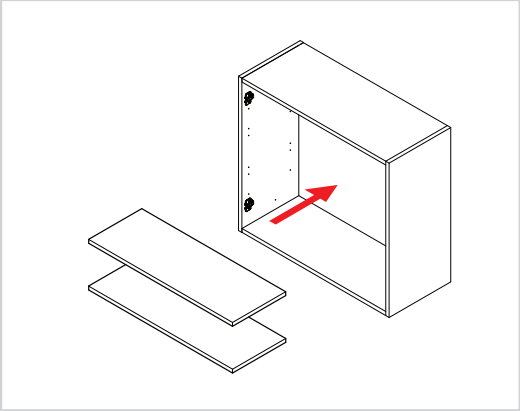

## Attaching the frontals

The frontals should be re-attached to the unit by clipping the hinges onto the hinge plates. The bar of the hinge needs to be positioned into the hooks on the hinge plate. Then the rear of the hinge pushed to the hinge plate until it clicks.

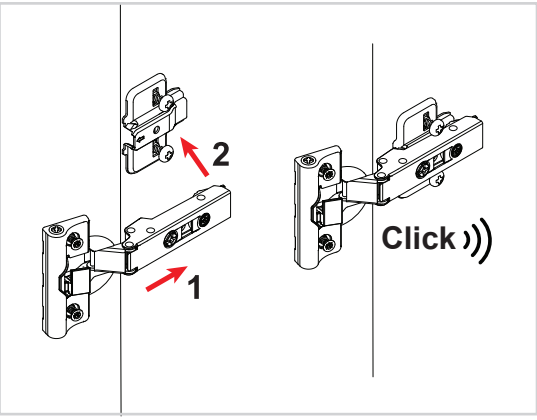

## Adding the door buffers

Position **2x** door buffers at the top and bottom of the carcase, as illustrated in the image.

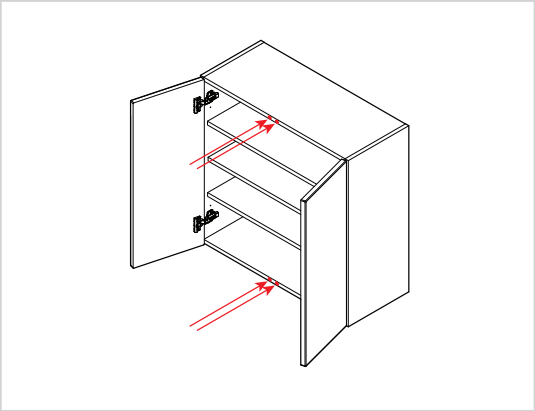

## Cleaning the unit

Finally, the unit should be thoroughly cleaned to remove any debris that may have accumulated during the installation.

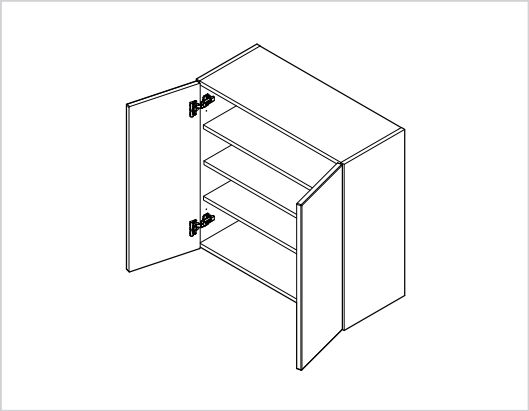

**For door alignment please review the following installation guide:**
**Door - Door Frontal Hinge Adjustment**