Splashback

Fitting Guide

Stainless And Non Clear Glass

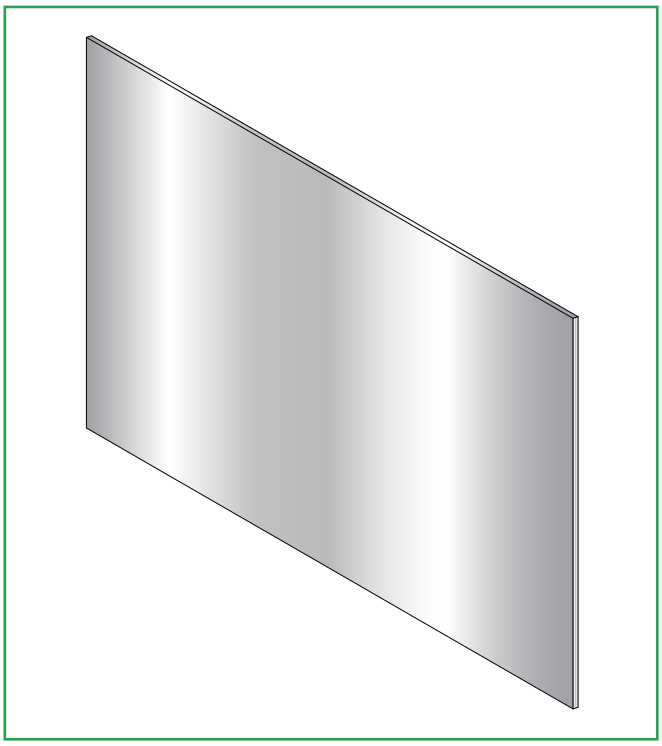

Splashback With Screws

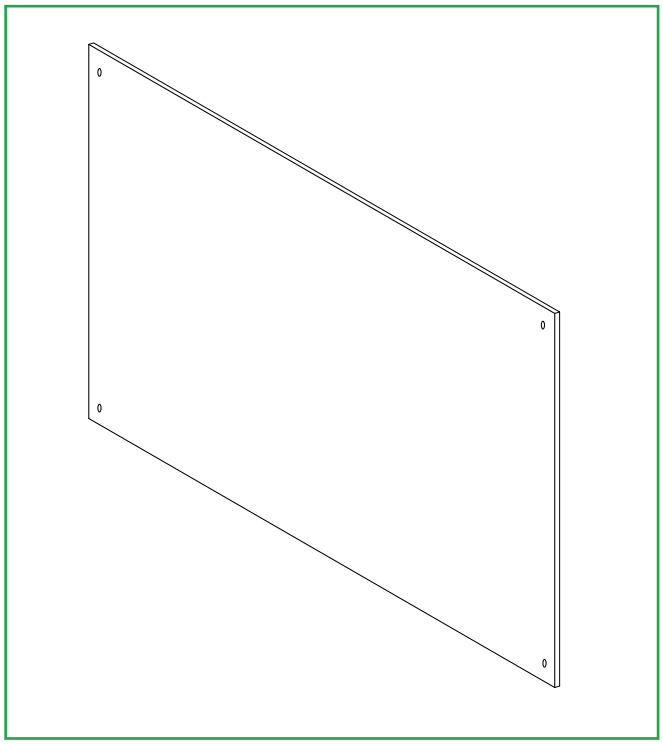

Stainless and non clear glass fitting guide - Page 2
Splashback with screw fitting guide - Page 5

Splashback

Splashback stainless and non clear glass, Fitting Guide

Parts Required

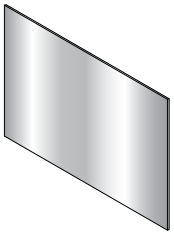

Splashback

Tools Required

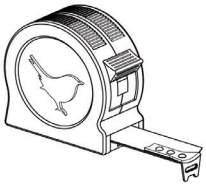

Tape Measure

Glue

Pencil

Masking Tape

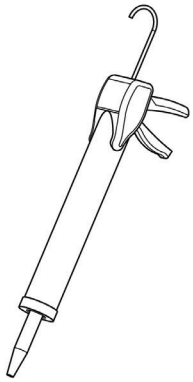

Adhesive

Remember to take care when unpacking. Please keep your workspace clean, clear and tidy when working. This will help keep all items safe from any damages. Any un-needed cardboard or plastic should be flattened down and placed in the bin.

Adding the masking tape

First, add low-adhesive masking tape to the bottom of the splashback and the back of the hob.

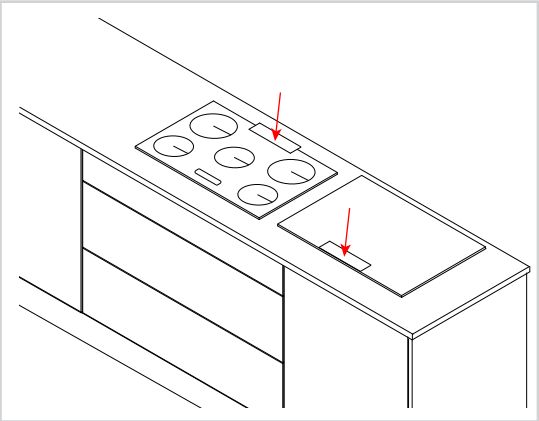

Marking the centre point

Find and mark the splasback and hob centre point to determine the splashback location.

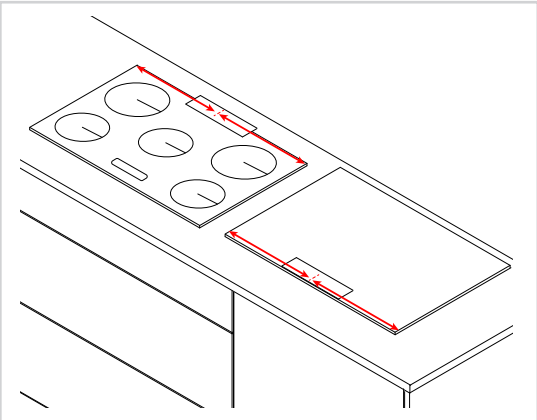

The wall must be in it finish state before installing the splashback.

Cleaning the area

Clean the wall and worktop where the splashback will be placed to remove any dirt which many have formed.

Applying the adhesive

Apply the adhesive to the back of the splashback. Make sure not to apply the adhesive too close to the edges as this will cause the excess adhesive to be visible on the wall once the splashback is fitted.

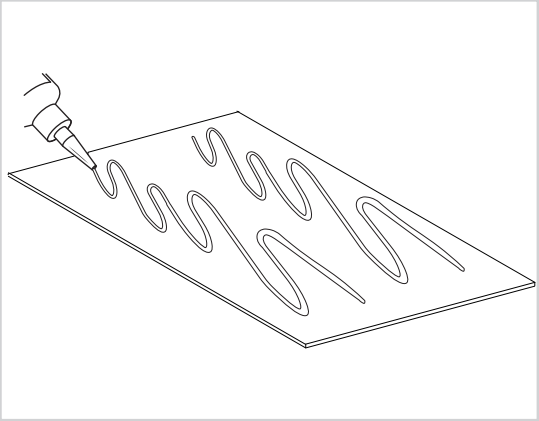

Ensure the worktop has been sealed.

Positioning the splashback

To mount the splashback to the wall, align the centre points of both the splashback and the hob.

Then press the splashback onto the wall keeping the centre points aligned. Wipe away any exceed adhesive before it dries. Let the adhesive dry, as directed by the adhesive instructions.

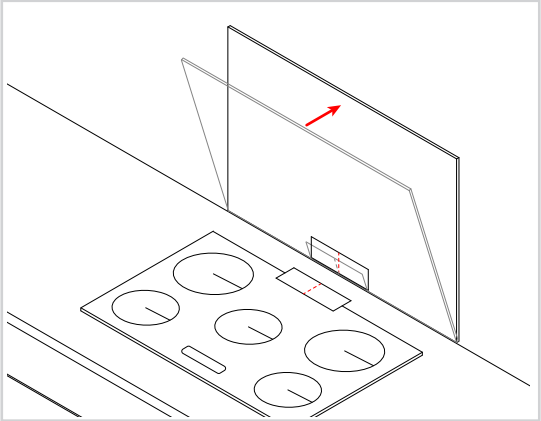

Fitting the splashback into position

Seal around the edges of the splashback and allow for sealant to dry.

Once the seal is dry remove the masking tape.

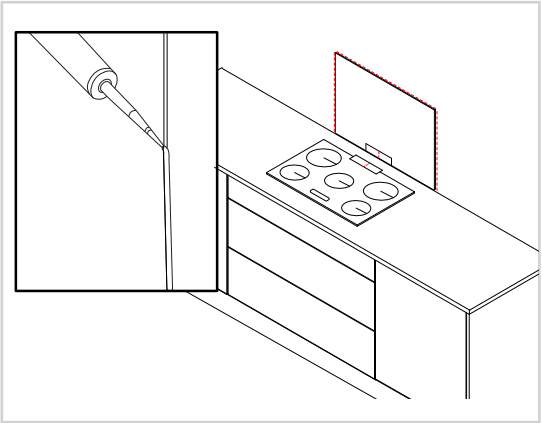

Splashback

Splashback With Screws, Fitting Guide

Parts Required

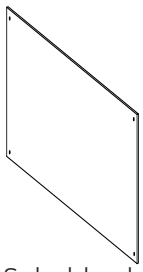

Splashback

Screw, washers and Caps (Provided with splashback)

Tools Required

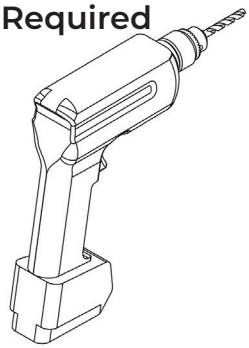

Drill

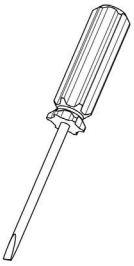

Screwdriver

Pencil

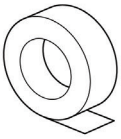

Masking Tape

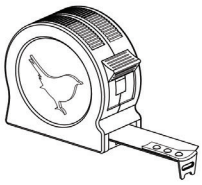

Tape Measure

Remember to take care when unpacking. Please keep your workspace clean, clear and tidy when working. This will help keep all items safe from any damages. Any un-needed cardboard or plastic should be flattened down and placed in the bin.

Adding the masking tape

First, add low-adhesive masking tape to the bottom of the splashback and the back of the hob.

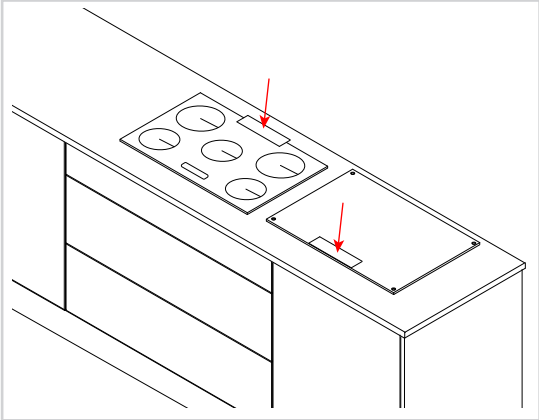

Marking the centre point

Find and mark the splasback and hob centre point to determine the splashback location.

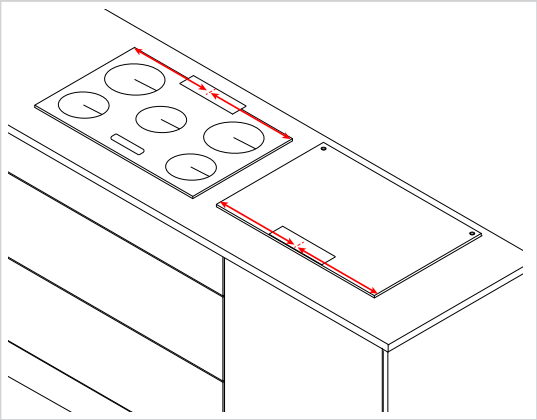

Positioning the splashback

Place the splashback onto the wall ensuring the centre points on both the splashback and hob align.

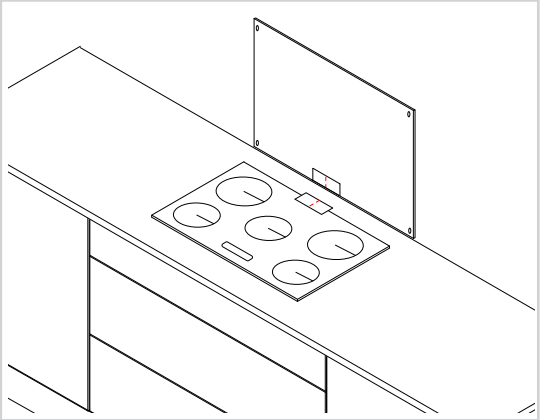

Mark the screw hole position

Mark the locations of each screw hole on the wall with a pencil.

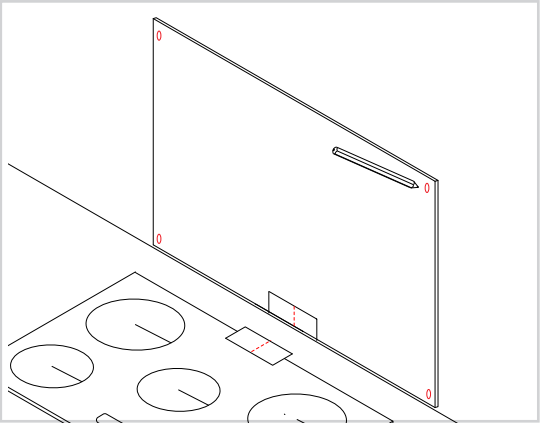

Cover the hob with a some cardboard to prevent any scratches.

Drilling the pilot holes

Remove the splashback from the wall and drill into the wall at the marked locations.

Insert the appropriate wall plugs (not included) into the holes.

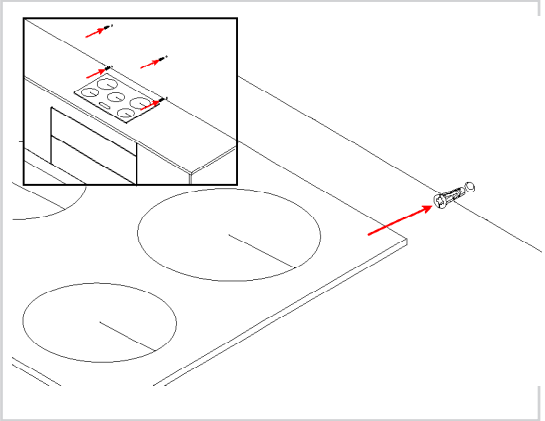

The wall must be in its finish state, as it will be visible through the glass splashback.

Cleaning the area

Before installing the splashback make sure to wipe the wall, worktop and splashback to remove any debris that may have accumulated during the driling.

Positioning the splashback

To mount the splashback to the wall, align the pre-drilled holes in the wall with the holes on the splashback.

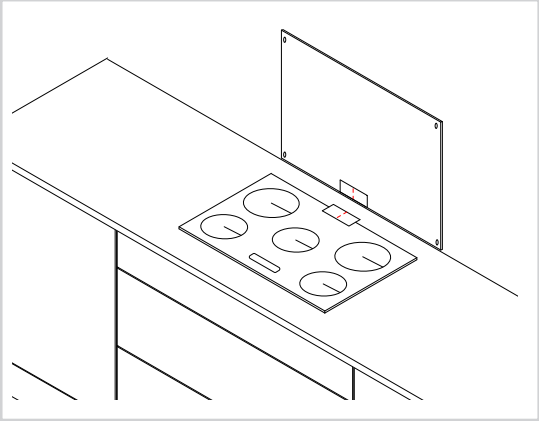

Ensure the worktop has been sealed.

Attaching the splashback

Insert the provided screws and washers (**2** per hole, **1** each side of the splashback) to fix the splashback.

Install the cover cap to hide the screw heads.
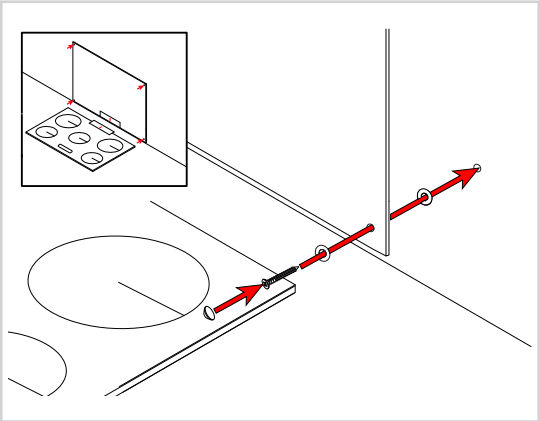
Once installed the masking tape can be removed.