Milano Profile

Milano Mid Profile, Fitting Guide

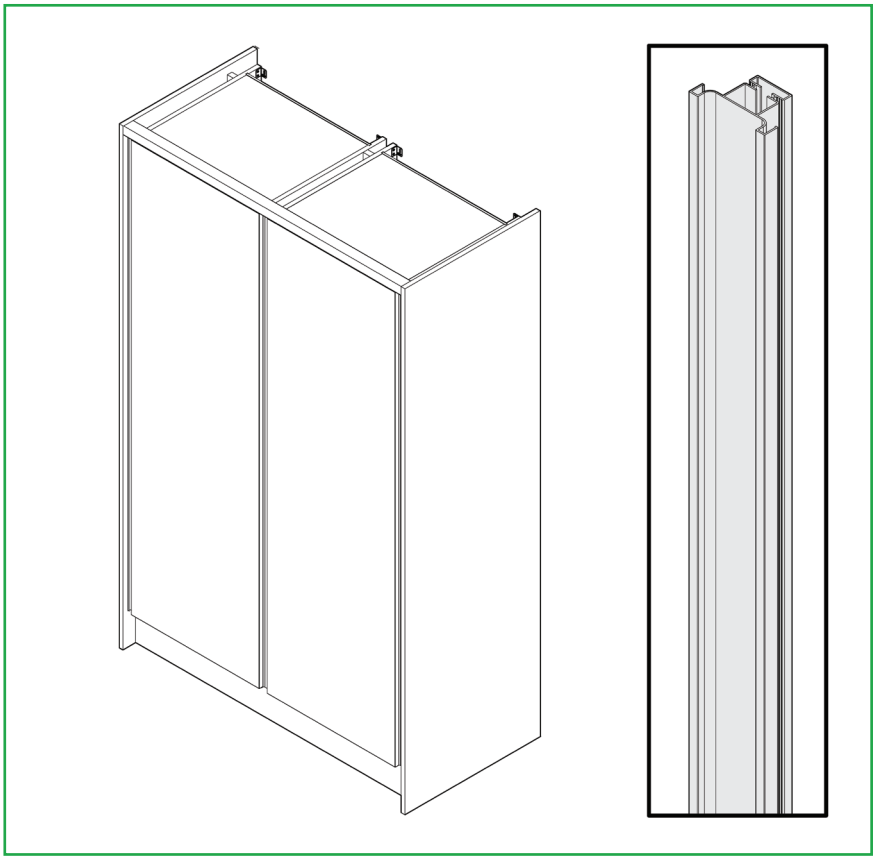

Parts Required

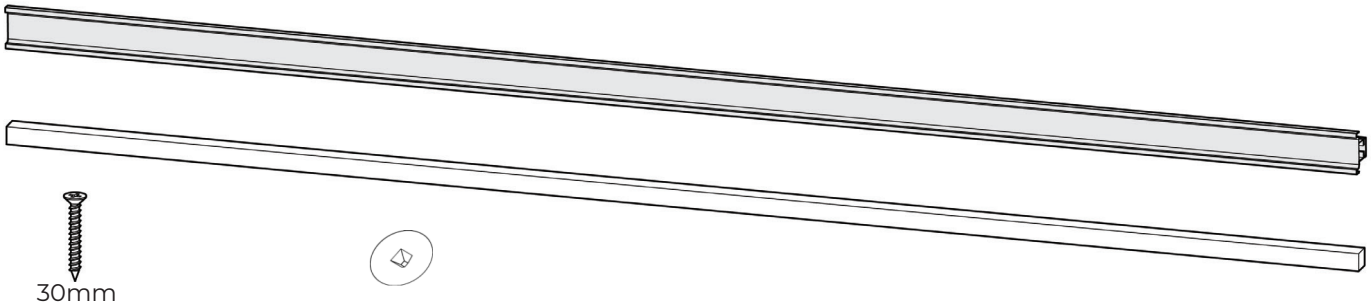

30mm Screws (not supplied)

Cover Caps (supplied with unit)

Tools Required

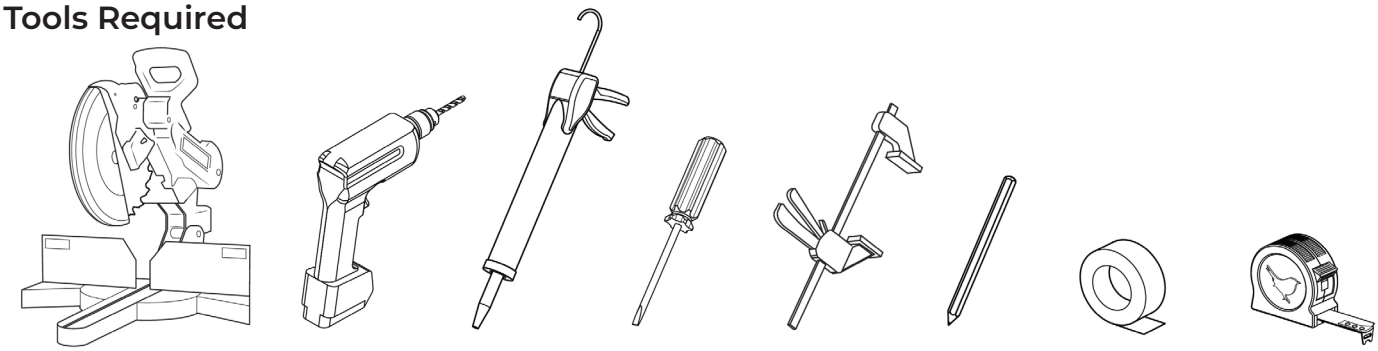

Chop Saw | Drill | Adhesive | Screw driver | Clamp | Pencil | Masking Tape | Tape Measure

Remember to take care when unpacking. Please keep your workspace clean, clear and tidy when working. This will help keep all items safe from any damage. Any un-needed cardboard or plastic should be flattened down and placed in the bin.

Removing the frontal

Remove the frontal from the tower units by pulling the release catches.

Place the frontals in the door safe along their longest lengths.

Remove any shelves and fixings from within the units and put in a safe place.

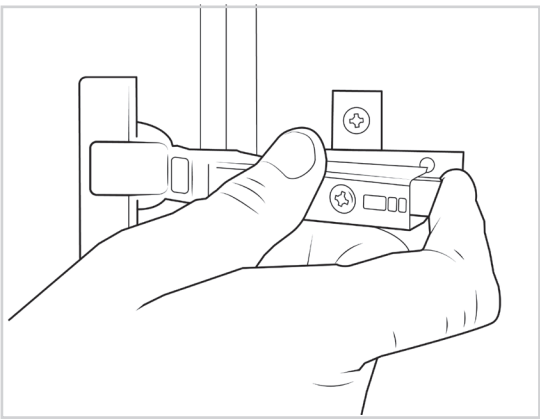

Finding the length of the profile and packer

To find the length of the profile and packer measure the height of the tower unit.

The profile and packer will sit in line with the underside of the unit and top of the unit as shown.

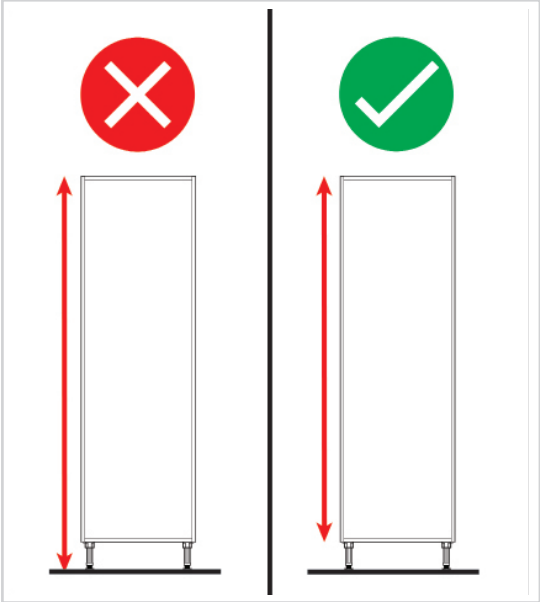

Marking the profile and packer measurements

Apply masking tape to the profile and packer. Using a pencil mark the measurement obtained.

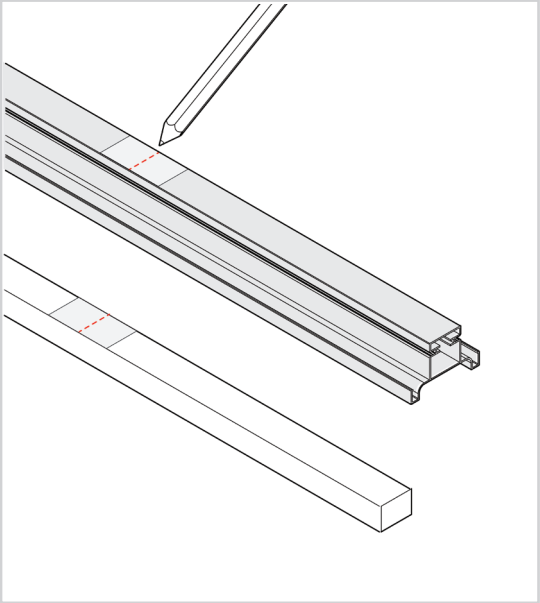

Cutting the profile and packer

Using a chop saw, line up the marked measurement and cut the profile and packer to size.

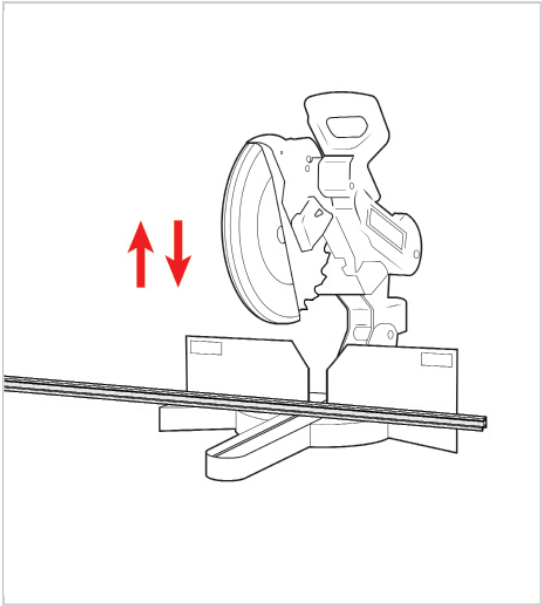

Glueing the packer

Apply adhesive to the thinner face of the packer.

This is the face that will fix to the unit's side. The wider face of the packer must be positioned facing forward to fill the width of the void space.

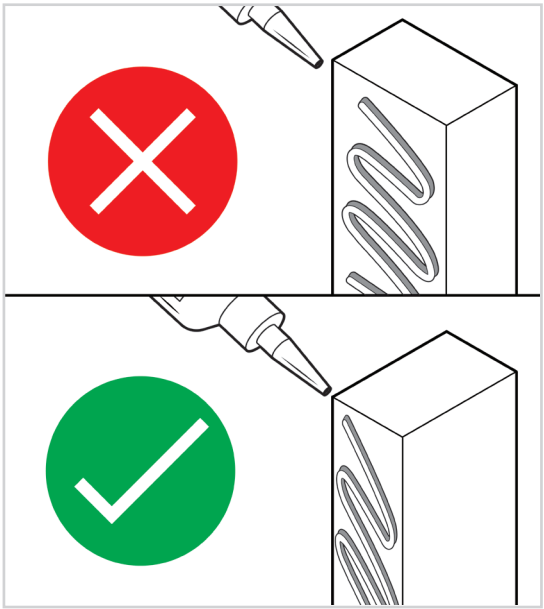

Attaching the packer to the unit.

Position the glued side of the packer to the side of the unit **100mm** from the rear wall.

The packer should sit flush with the top and bottom of the unit if cut correctly, excluding the legs.

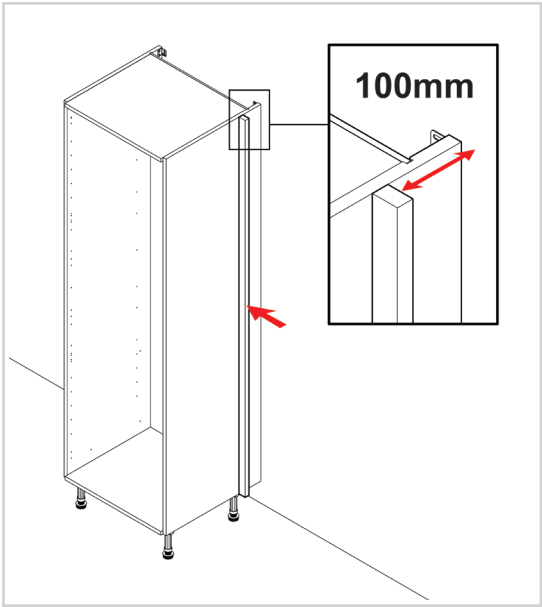

Clamping the profile

Position the mid profile to fix to the front side of the unit.

Ensure the profile is level and flush with the top, bottom and front edges of the unit.

Once positioned, clamp the profile to the unit.

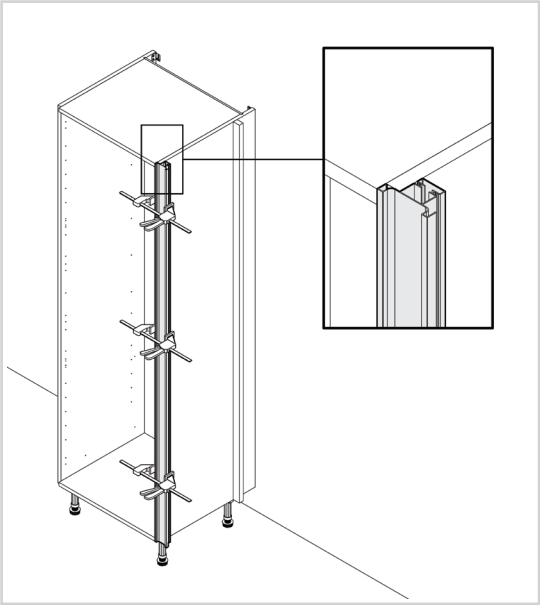

Marking the profile screws

Place low adhesive masking tape to the inner side of the unit near the front edge.

In **4** evenly spaced positions, measure **32mm** from the front of the profile into the unit and mark where the screws will be placed with a pencil.

Where possible position the holes behind shelves and hinge plates to conceal any screw heads.

These markings will represent where the screws will be fixed.

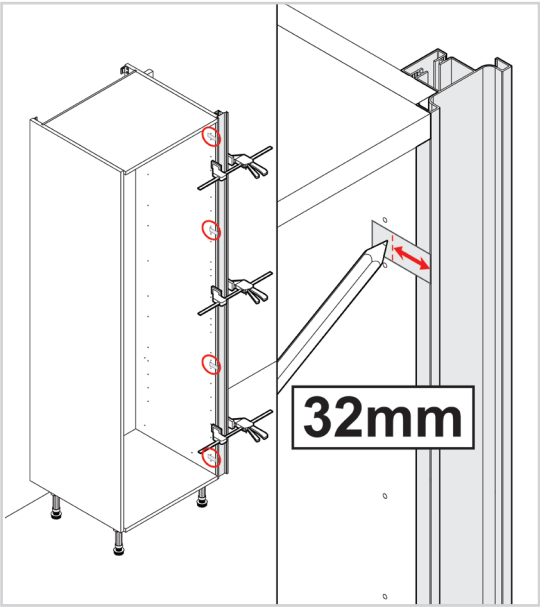

When securing the profile to the unit, screws appropriate for metal are required.

Where an appliance housing is fixed, the screws should be situated behind the appliance.

Fixing the profile to the unit

Pre-drill a hole in each of the marked positions and remove the masking tape.

Use **4x30mm** screws into the pre-drilled holes to fix the mid profile to the tower units.

Once fixed remove the clamps.

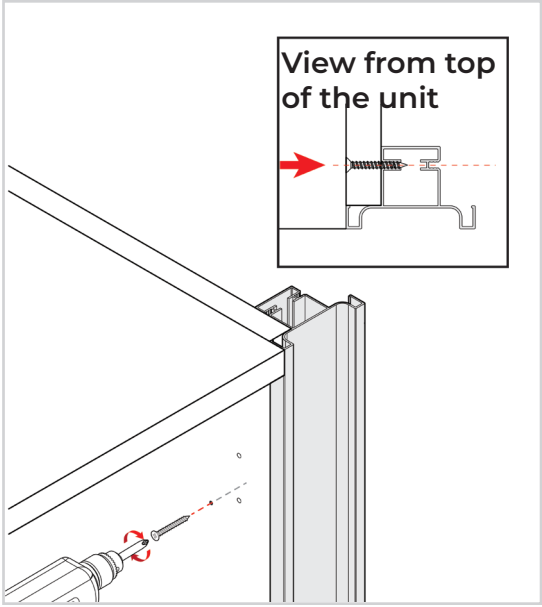

Positioning the adjacent unit

Move the adjacent tower unit into place. The **2** units should sit side by side with the packer and profile in between.

Use a spirit level to check the units and profile align on the top, bottom and front edges.

Once in place clamp the units together.

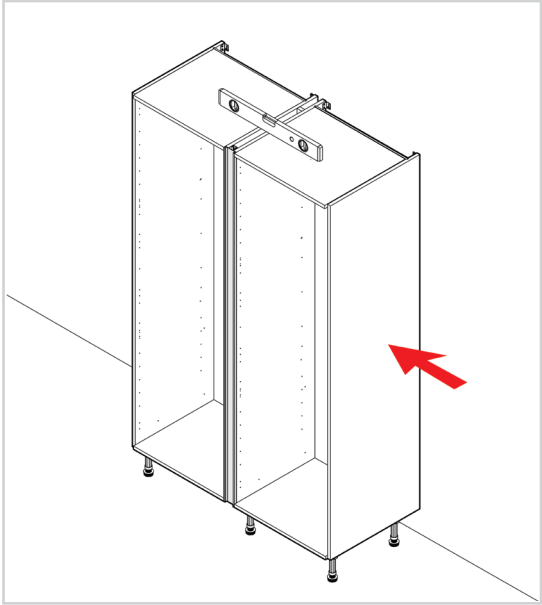

Fixing the profile to the unit

With the second unit repeat the previous steps to mark and pre-drill holes.

Use another **4x30mm** screws into the pre-drilled holes to fix the mid profile to the second tower unit.

Once fixed, remove the clamps and add cover caps where necessary to hide any visible screw heads.

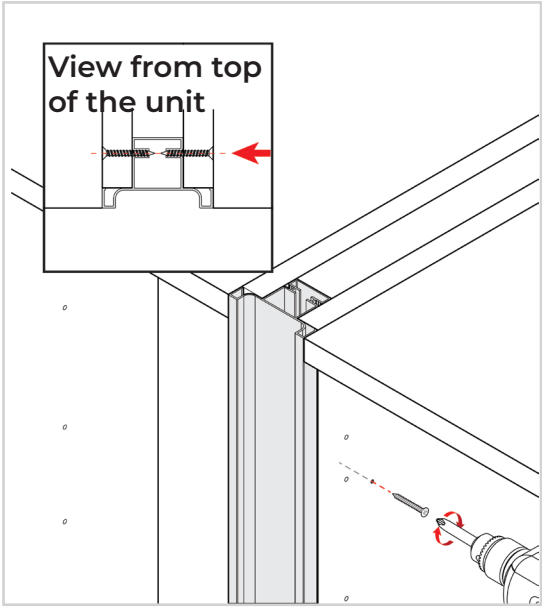

Attaching the frontal

The frontal should be re-attached to the unit by clipping the hinges onto the hinge plates. The bar of the hinge needs to be positioned into the hooks on the hinge plate. Then the rear of the hinge pushed to the hinge plate until it clicks.

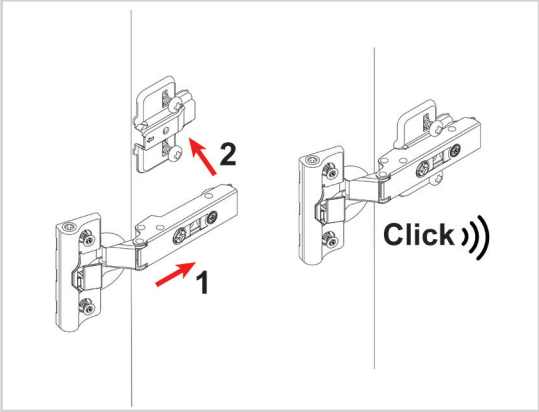

Cleaning the unit
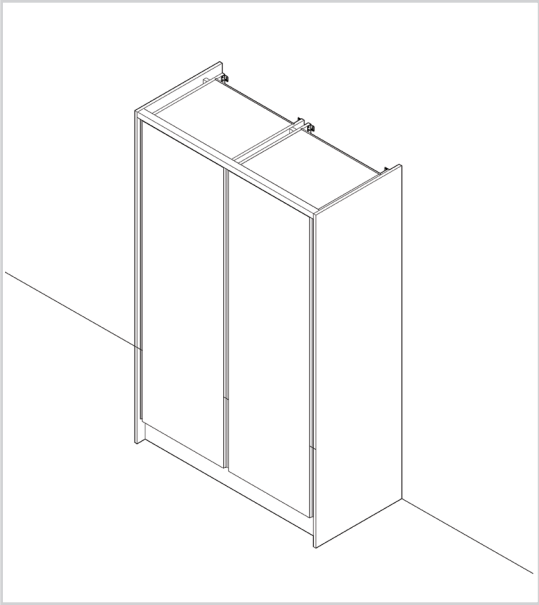
Once the decor has been attached, clean the unit of any debris. Insert all fixings and shelves back into the unit.