Shelving

Shelf and Brackets - Fitting Guide

Unit Parts

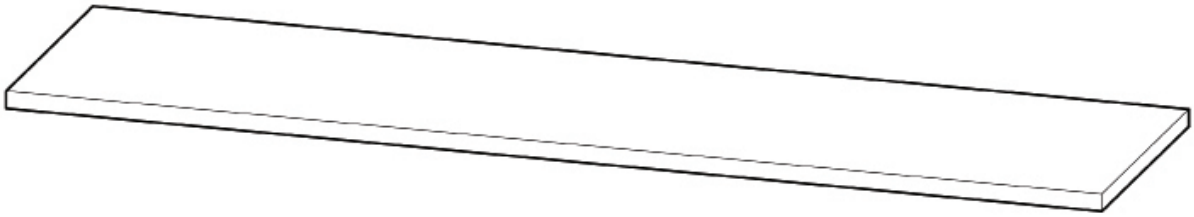

Shelf

Wall Fixings
(not supplied)

Hex Head Bolt

Bracket Plate

Shelf Bracket

Shelf Protectors

Tools Required

Hex Key

Drill

Screwdriver

Spirit Level

Pencil

Tape Measure

Remember to take care when unpacking. Please keep your workspace clean, clear and tidy when working. This will help keep all items safe from any damage. Any unneeded cardboard or plastic should be flattened down and placed in the bin.

Before drilling into the wall you MUST check for any hidden services or pipework within the walls.

No screws or wall plugs are provided for attaching the shelf to the wall. This is due to variations in wall construction.

Planning the bracket locations

Plan the location of the shelf brackets.

Each shelf will require a minimum of 2 brackets for each end. In addition, the shelf should be supported by a bracket at least every **600mm.** Additional brackets should be centralised along the length of the shelf as shown.

60mm to **100mm** of overhang on the shelf is recommended on the end brackets. The amount of overhang should be the same at each end of the shelf.

Ensure that you are aware of any services/ pipework in the wall and do not screw in any brackets where services are located.

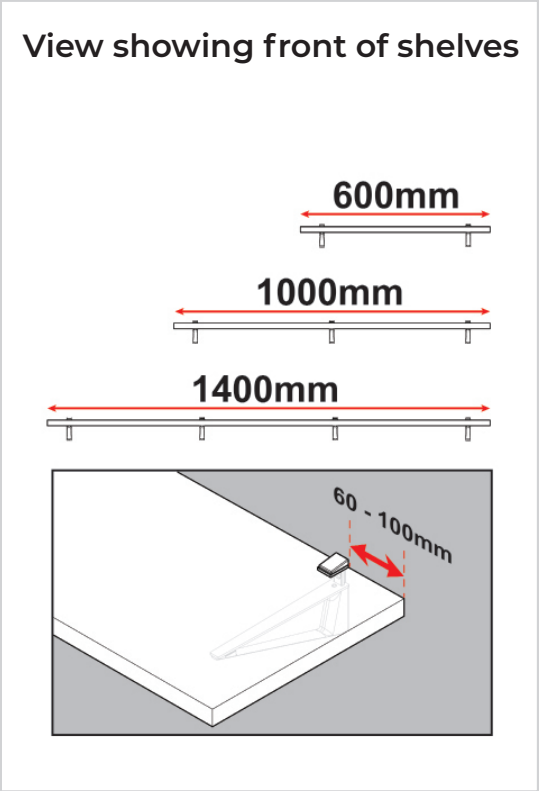

Measuring and marking the bracket locations

Hold a bracket plate up to the wall in the first position and height required, then use a pencil to mark the positions of the screws through the holes in the plate.

Repeat this step for the rest of the bracket plates. Use a spirit level to ensure the locations of the bracket plates will be level.

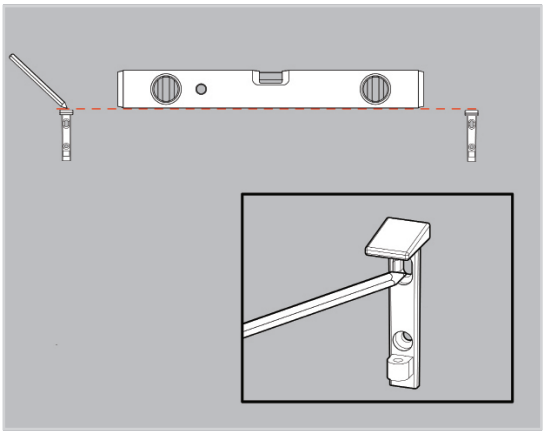

Attaching the hanging brackets to the wall

Drill the marked locations and then place any wall plugs into the holes as required.

Attach the bracket plates by fixing screws through the bracket plates and into the wall.

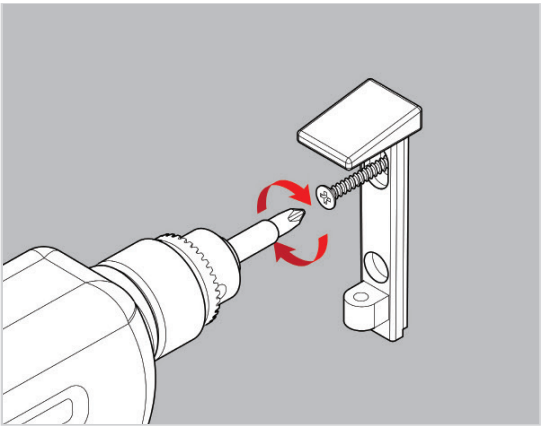

Attaching the shelf bracket to the plate

Attach the brackets by sliding them upwards onto the bracket plates. Use the hex head bolts provided to fix the bracket in position.

Do not fully tighten the bolt at this stage. Leave a gap between the upper part of the bracket plate and the top of the bracket that is bigger than the thickness of the shelf material. This will make it easier to insert the shelf into position.

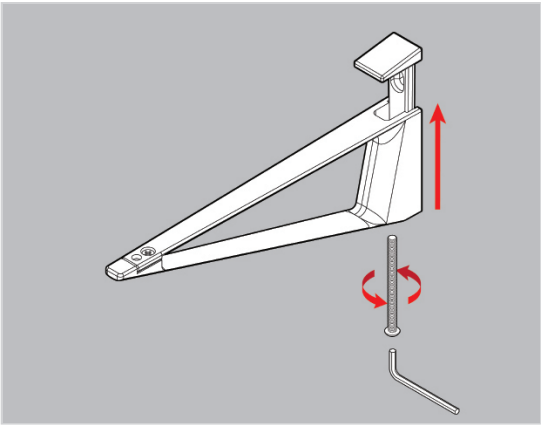

Attaching the shelf protectors

Attach the shelf protectors to the upper and lower parts of the bracket assembly by snapping them into position on the back of the bracket plate.

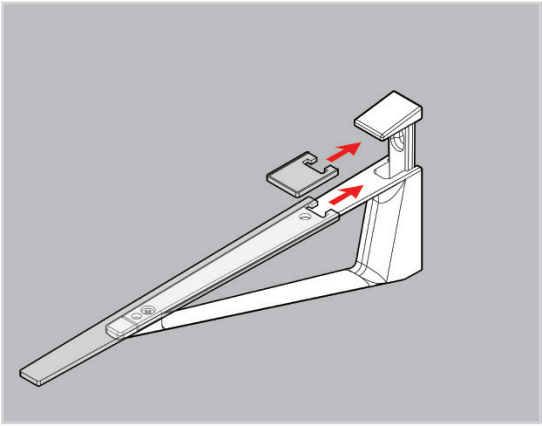

Inserting the shelf

Insert the shelf fully into each bracket, making sure that the rear of the shelf is pushed all the way to the back of the brackets, and that the overhang at each end of the shelf is evenly positioned.

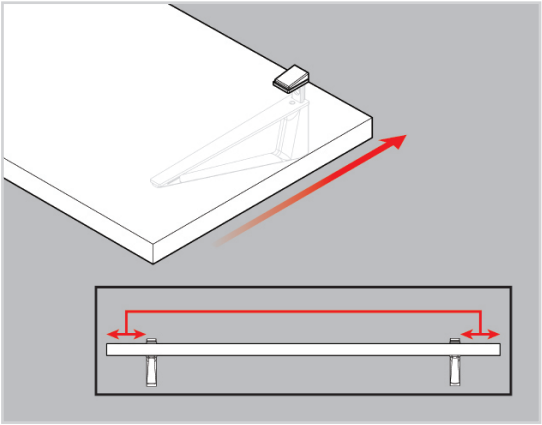

Tightening the brackets
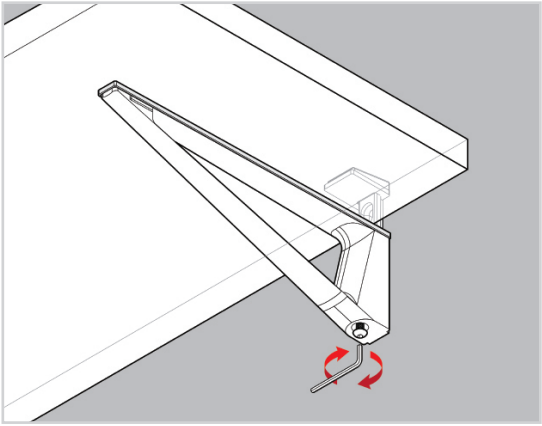
Using a hex key, tighten the bolts to lock the shelf into position.