EASY-FIT

Base Unit

700 Appliance Base (Door, Open Top)(Flatpack) - Fitting Guide

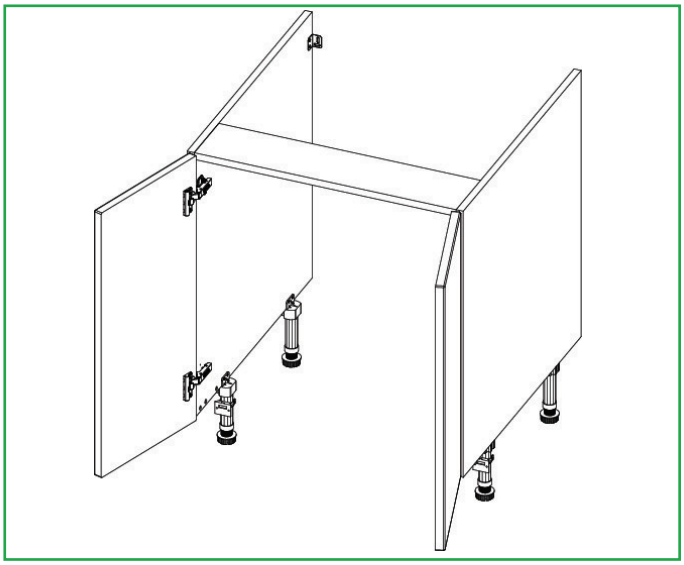

Tools Required

Drill

Jigsaw

Mallet

Screwdriver

Clamp

Spirit Level

Tape Measure

Unit Parts

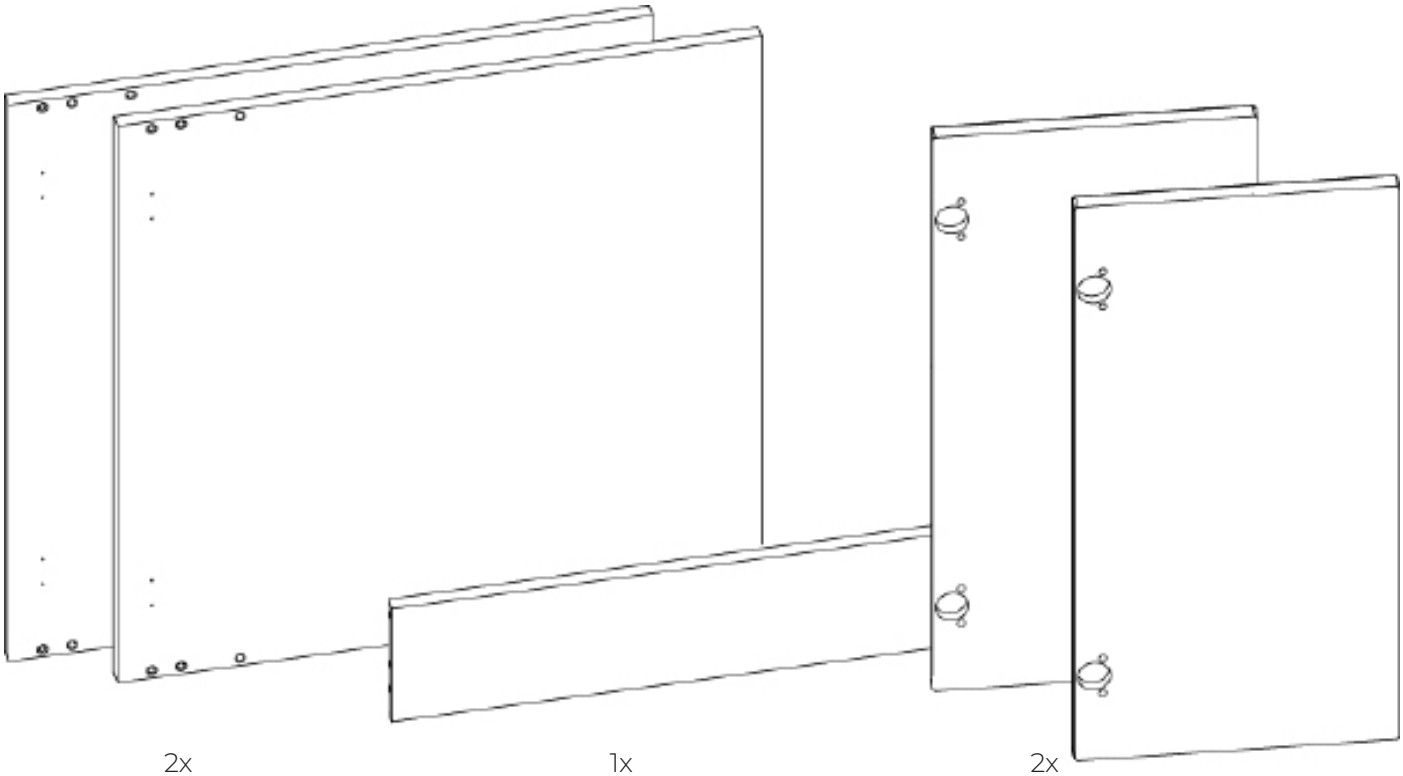

2x
Side Panels

1x
Rail

2x
Frontals
(Packed Separatley)

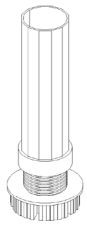

4x
Legs

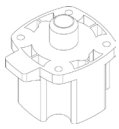

4x
Leg Brackets

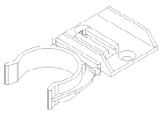

2x
Plinth Clips

2x
L-brackets

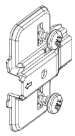

4x
Hinge Plates

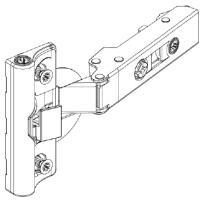

4x
Hinges

6x
Wooden
Dowels

28 x 15mm
Screw

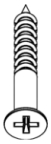

6x 30mm
Screw

4x
Cover
Caps

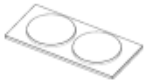

5x
Door
Buffers

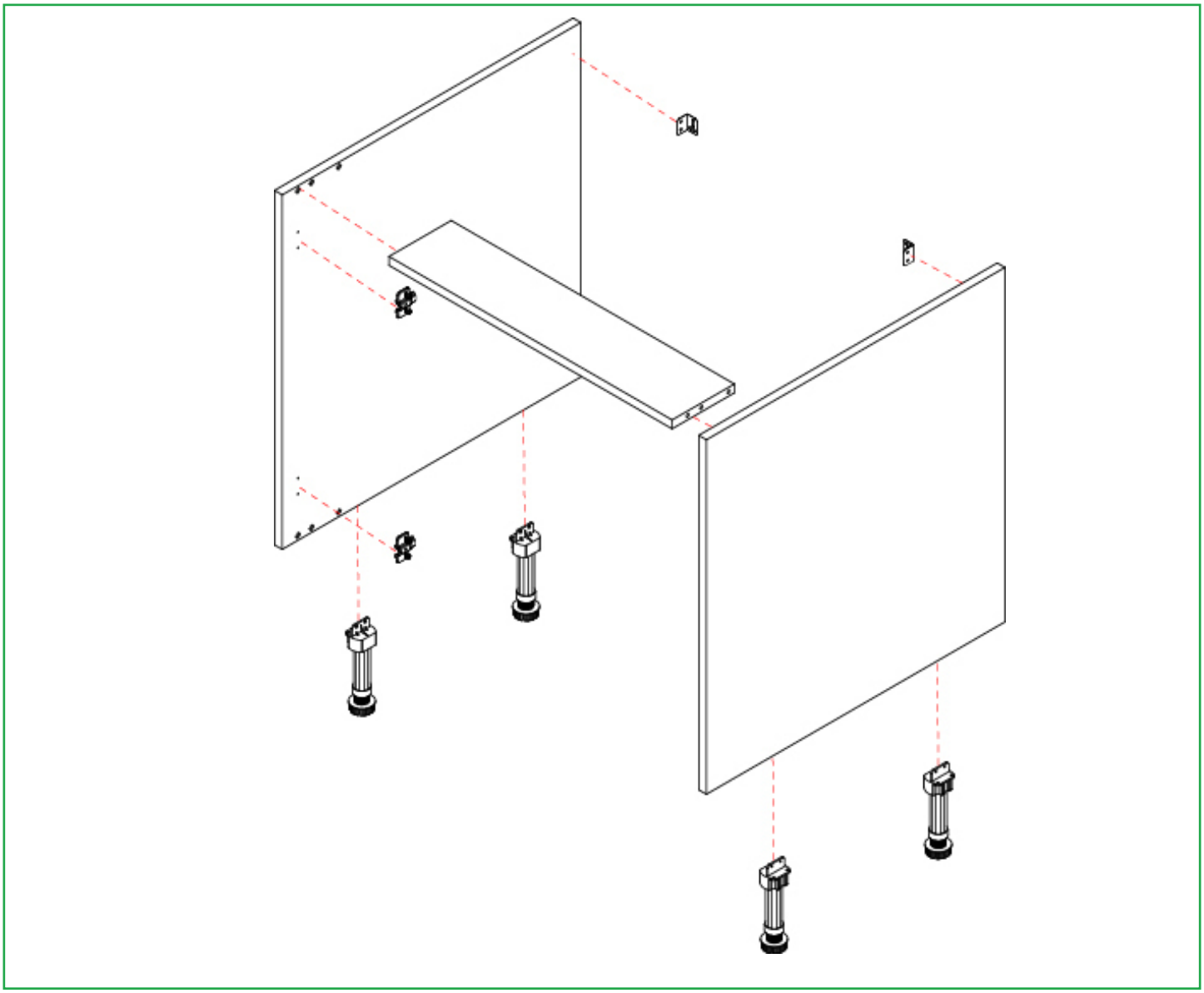

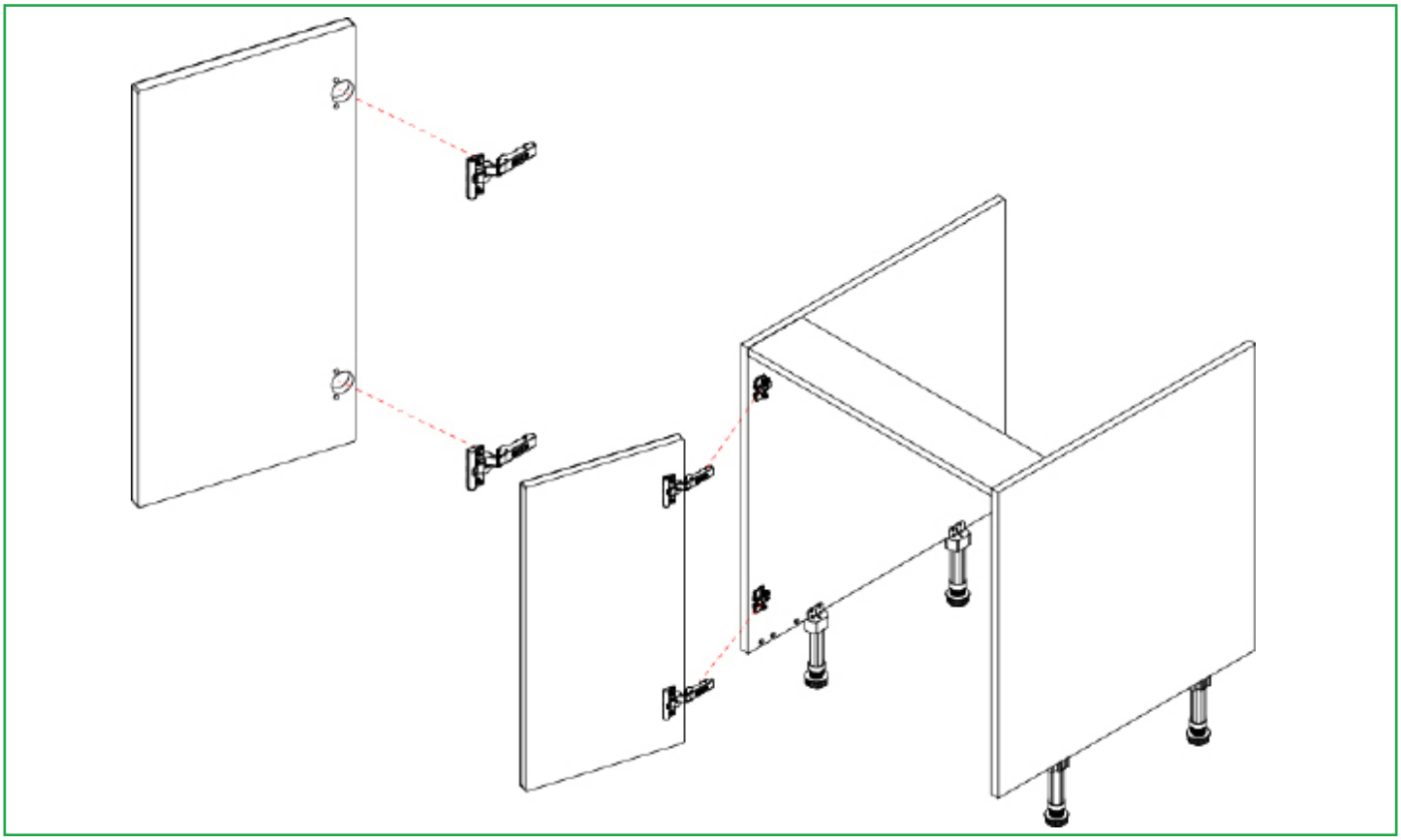

Remember to take care when unpacking. Please keep your workspace clean, clear and tidy when working. This will help keep all items safe from any damages. Any un-needed cardboard or plastic should be flattened down and placed in the bin.

A minimum of two people will be needed to lift the unit.

Removing the fittings

Remove all content so the unit is empty.

All fittings should be kept on a clean and level surface.

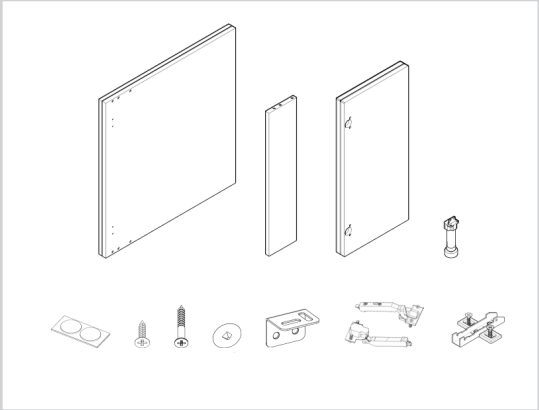

Removing the glue dots

When unpacking, the panels are held together with soft glue dots. Remove this glue by gently rubbing with a clean, dry cloth.

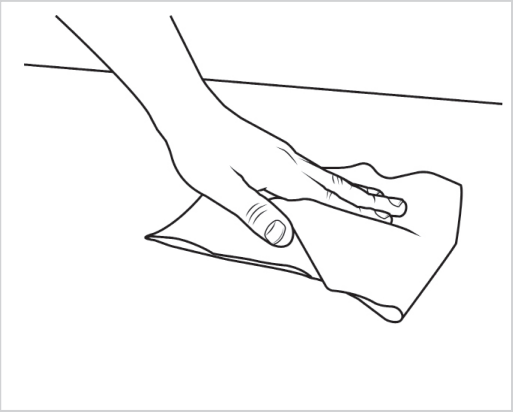

The following steps will be done on the indicidual panels, please complete these steps on a clean, level, and solid worksurface, such as a trestle table.

Locating the side panels

Locate the **2x** side panels and place them on a solid clean surface.

Arrange the panels next to each other so the holes are located on the outer edges of the panels, the hole patterns should be mirrored as shown in the diagram

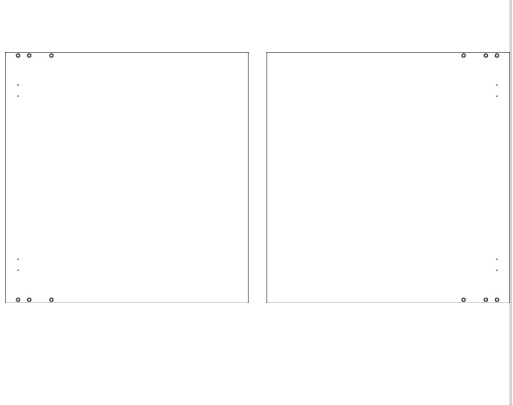

Locating the leg bases

Locate the centre point of the leg bases by measuring **69mm** in from the front and back edge of the side panels, as shown in the diagram.

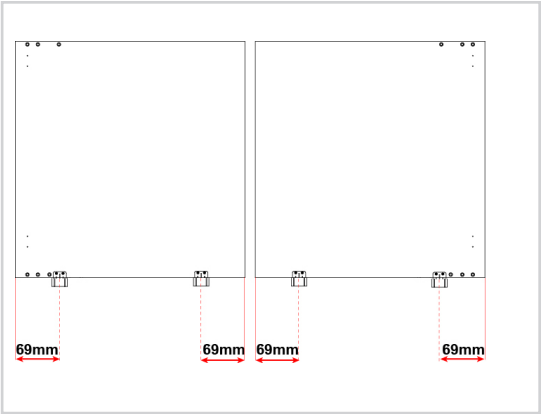

Ensure when placing the leg bases, the lip is positioned on the inside of the panel.

Fixing the leg bases

Using **4x15mm** screws for each leg, fasten the leg bases into position. As indicated in the picture, there are **2x** screws on top and **2x** screws on the side.

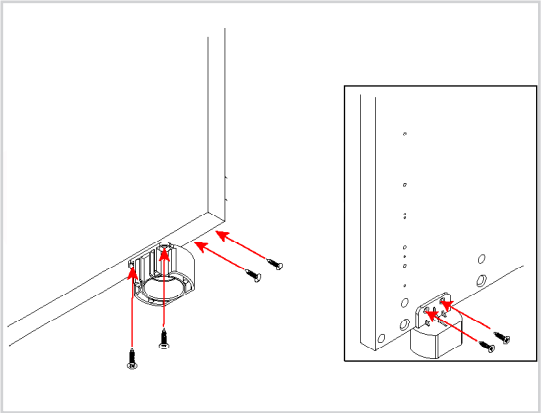

Inserting the legs

Push each leg firmly down into the leg bracket. Adjusting each leg to **155mm**.

Adjust the legs to the correct height by turning clockwise or anti-clockwise.

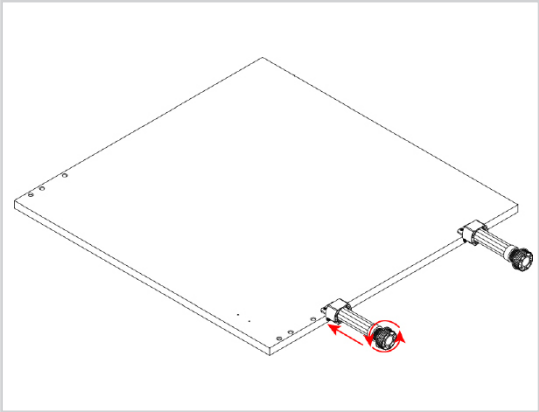

Securing the L-bracket

Secure each of the L-bracket to the rear of the side panels using **2x15mm** screws at each side.

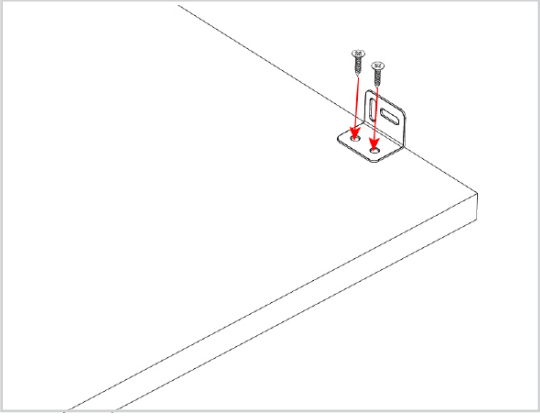

Fixing the hinge plates

Using a drill, fit the hinge plates inside the side panelsusing the screw provided in the hinge plates. Ensure the arrows on the plates are facing the front of the unit.

The upper screw hole for the top hinge plate is located **94mm** from the top of the unit.

The lower screw hole for the bottom hinge plate is located **94mm** from the bottom of the unit.

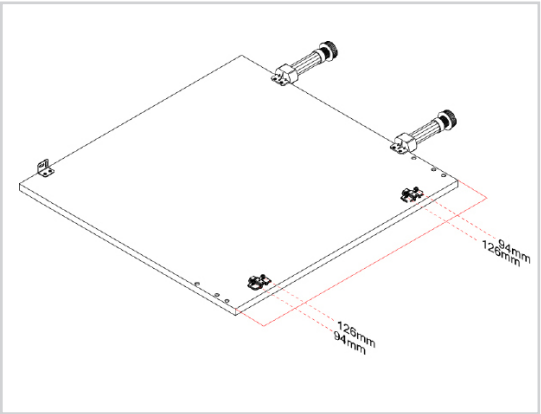

Constructing the unit

To secure both of the side panels to the rail panel align the wooden dowels within the rail with the holes on the inside of the side panel, as shown. Use wood glue in the holes to secure the side panels to the rail.

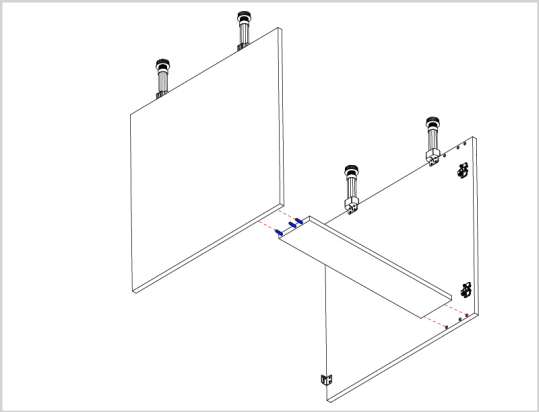

Notching out the end panels (when required)

In order to allow for any horizontal pipework running behind the unit, some units will require the back of unit's side to be notched out.

Create a notch for the horizontal pipes at the back of the end panels using a jigsaw.

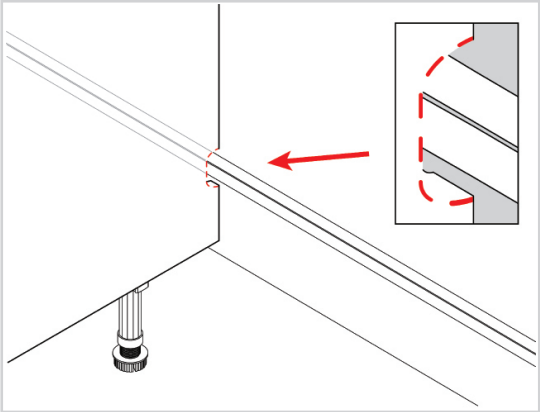

Lifting the unit into place

When lifting the unit into place do not tilt as this can damage the legs.

Place the unit against the wall and align it with the wall markings that will have been drawn during the room preparation stage.

Use a spirit level to ensure the unit is level from front to back, left to right, and diagonally. Adjust the legs if required.

The leg height can be adjusted by turning the foot of the leg clockwise or anti-clockwise.

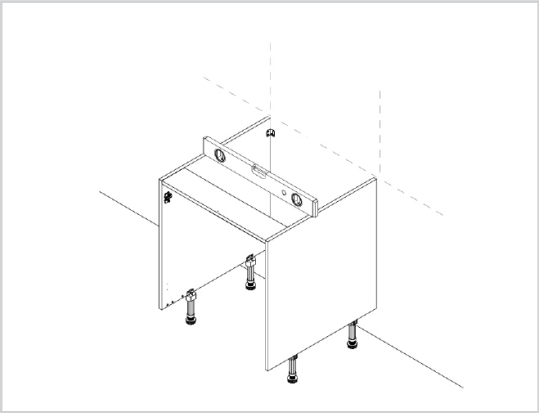

No screws or wall plugs are provided for attaching the unit to the wall.
This is due to variations in wall construction.

Before drilling into the wall you MUST check for any hidden services or pipework within the walls.

Attaching the unit to the wall

Screw the unit into the wall using the L-brackets as show in image below (these screws are not provided).

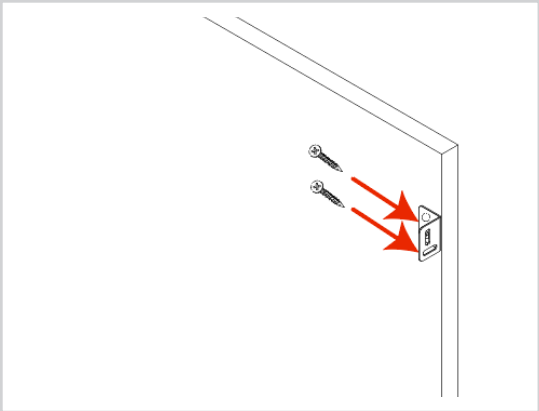

Securing to adjacent units

Clamp together the two units, checking the front edges are level and flush.

Using the screws provided, **1x30mm** screw should be fixed into each corner of the carcase side.

The screws can be concealed by placing them behind the shelf or behind the hinge plates. The cover caps can be used to hide any visible screw heads that remain.

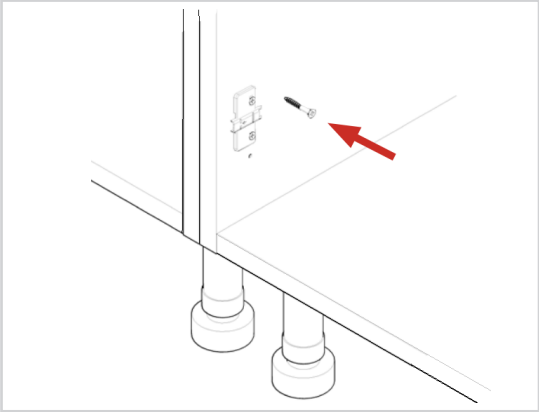

Fixing the hinges

Insert the hinges into the hinge holes provided on the frontal.

Secure the hinges with the **2x** screws already located in the hinges.

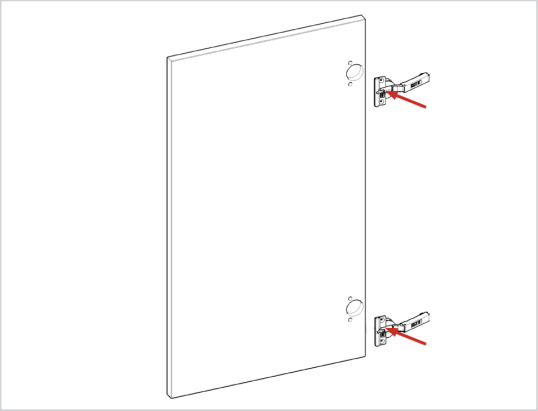

Attaching the frontal

The frontal should be attached to the unit by clipping the hinges onto the hinge plates. The bar of the hinge needs to be positioned into the hooks on the hinge plate. Then the rear of the hinge pushed to the hinge plate until it clicks.

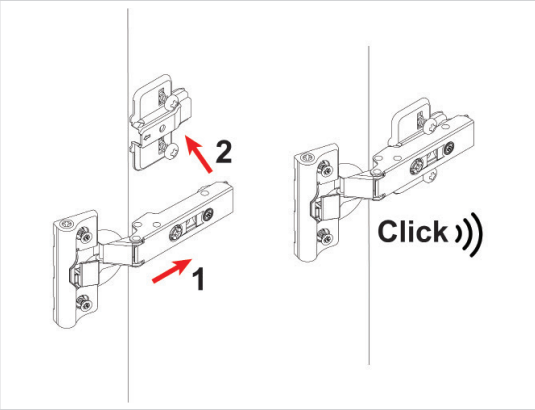

Adding the door buffers

Position **2x** door buffer at the top of the carcase, as illustrated in the image.

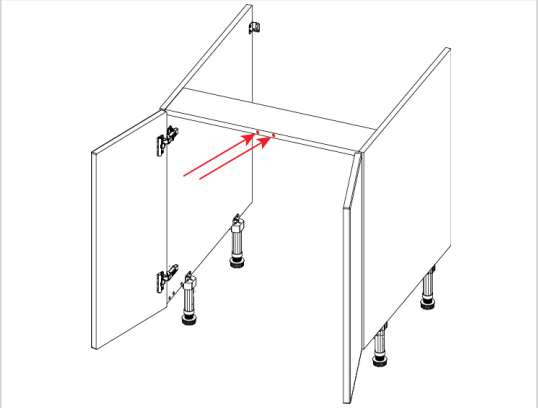

Adjusting the hinge

To adjust the hinges, use a screwdriver as required at points 1 and 2.

Point 1 -Will adjust the frontals left and right.

Point 2 - Will adjust the frontals in and out.

Point 3 - Will adjust the height of the frontal. Re-tighten the screw.

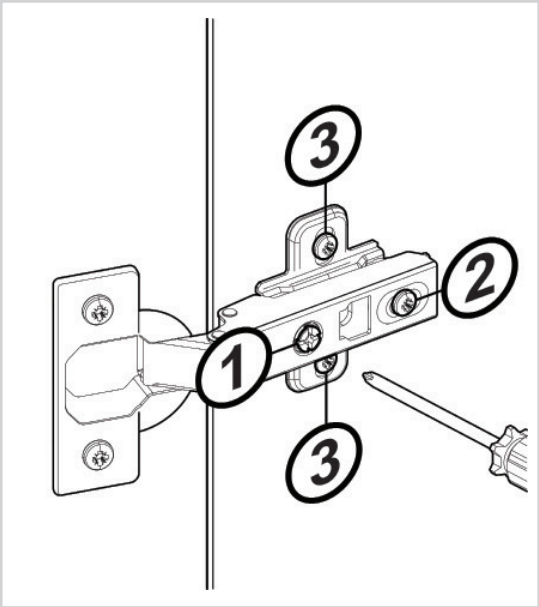

Fitting the hinge cover cap

Fit the hinge cover caps to the hinges by pressing down to secure.

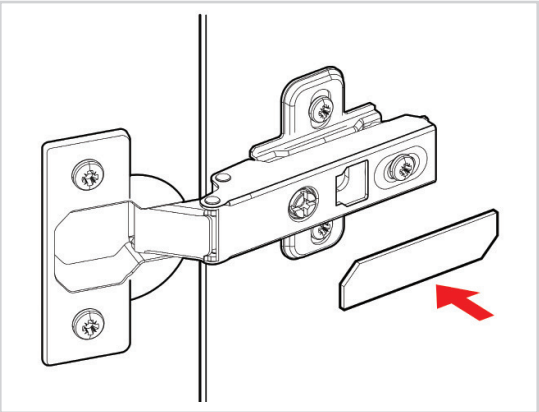

Cleaning the unit

Finally, the unit should be thoroughly cleaned to remove any debris that may have accumulated during the installation.

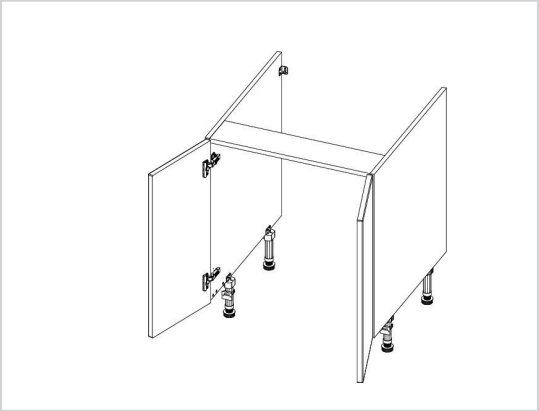

Store the plinth clips and the remaining 15mm screws.
These will be used later when attaching the plinth.