EASY-FIT

Base Unit

600 Appliance Base (Open Top, 4 Legs) - Fitting Guide

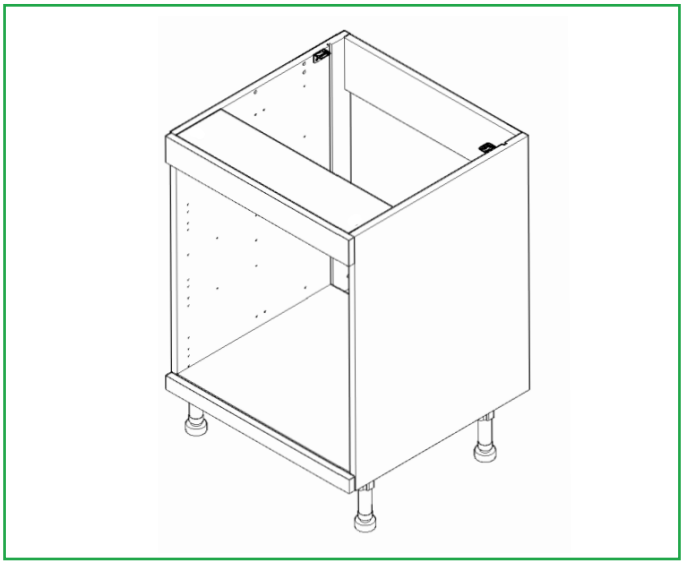

Unit Parts

22x 15mm screws

6x 30mm screws

18x Cover Caps

4x Legs

4x Leg Brackets

2x Plinth

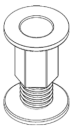

1x Space Plug

2x L-Brackets

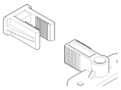

2x Dummy Fixing Clip Inc Screws

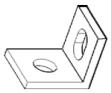

2x Small L Bracket

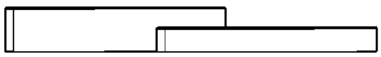

1x Filler F (Packed separatly)

1x Filler G (Packed separatly)

Tools Required

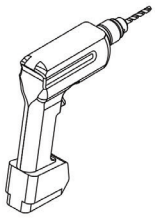

Drill

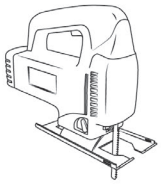

Jigsaw

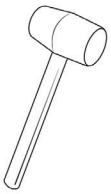

Mallet

Screwdriver

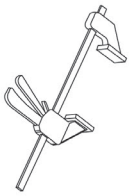

Clamp

Spirit Level

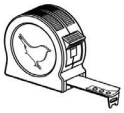

Tape Measure

Remember to take care when unpacking. Please keep your workspace clean, clear and tidy when working. This will help keep all items safe from any damages. Any un-needed cardboard or plastic should be flattened down and placed in the bin.

A minimum of two people will be needed to lift the unit.

Removing the fittings

Remove all content so the unit is empty.

All fittings should be kept on a clean and level surface and the shelf placed in the door safe along its longest length.

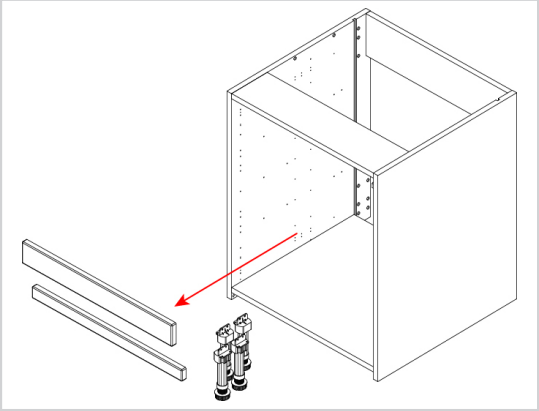

Positioning the leg brackets

Locate the leg brackets and position, as shown in the diagram. Ensure the leg brackets are rotated so the flange covers the outer edge, as this provides support for the edge of the unit.

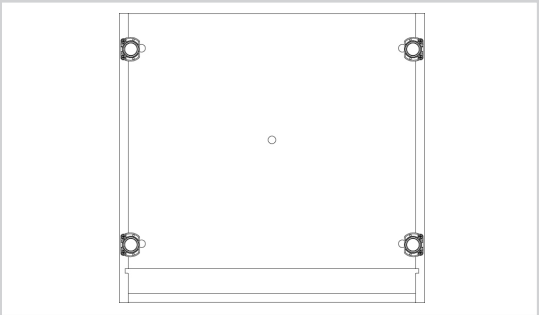

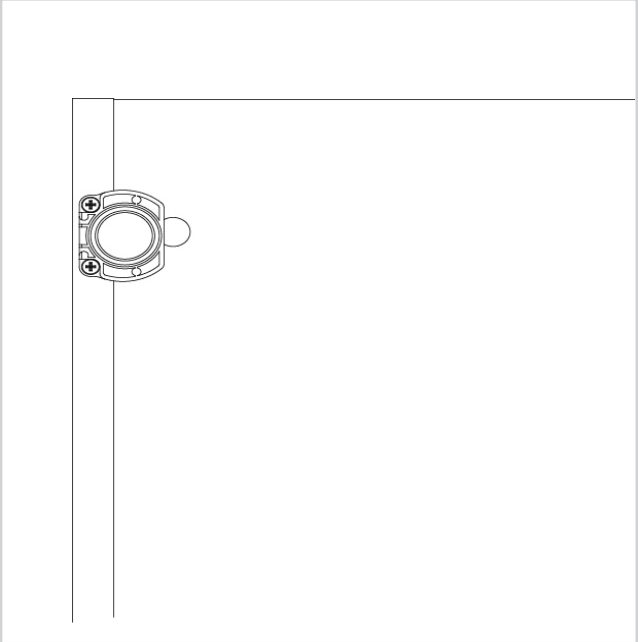

Fixing the leg bases

Using **4x15mm** screws for each leg, fasten the leg bases into position. As indicated in the picture, there are **2x** screws on top and **2x** screws on the side.

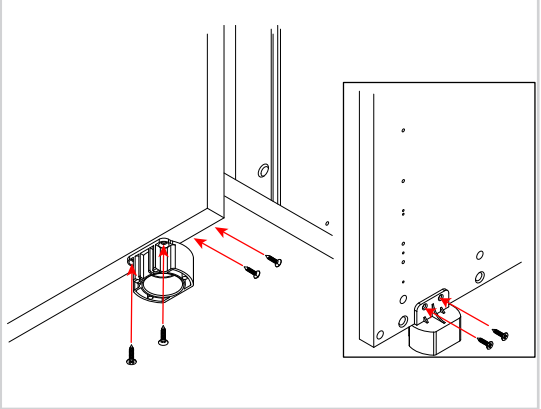

Inserting the legs

Push each leg firmly down into the leg bracket. Adjusting each leg to **155mm**.

Adjust the legs to the correct height by turning clockwise or anti-clockwise.

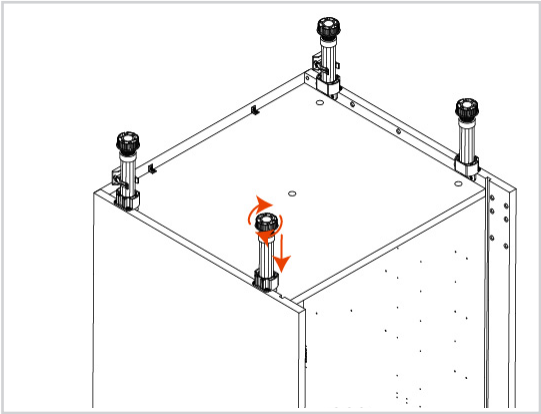

Attaching the L-brackets to Filler G

Using one **1x15mm** screw per small L bracket, attach the two small L brackets to the inner face of Filler F.

To determine the location of both L brackets, use the diagram.

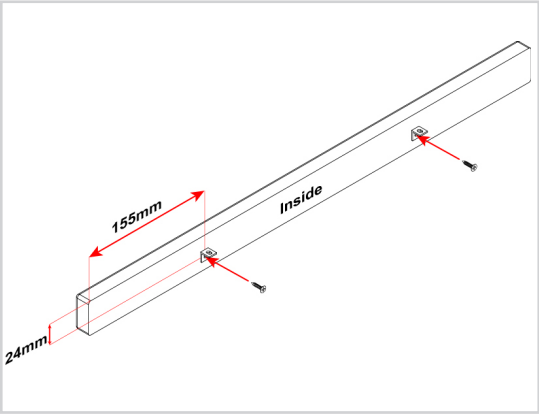

Fixing Filler G to the unit

Make sure Filler G is in line with the frontals next to it as you align it with the unit.

With the unit upside down secure Filler G with **1x15mm** screw per small L bracket to base of unit as shown.

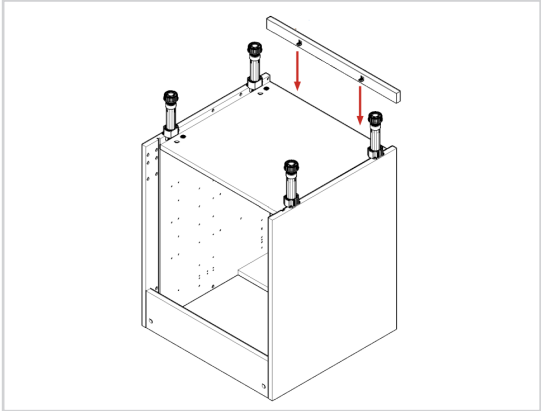

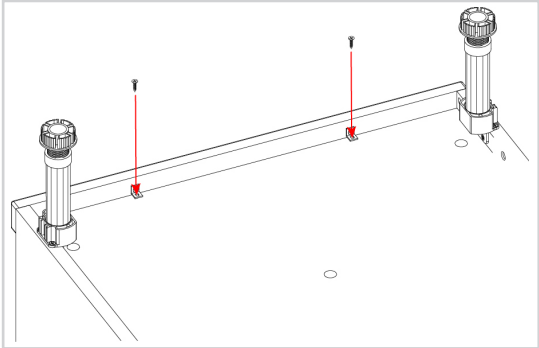

Securing the dummy fixing clips onto Filler F (Part A)

Secure the dummy fixing clips (Parts A) onto both the side panels of the unit using **2x15mm screws** for each of the clips.

Using the pre-drilled hole, position the bottom screw hole **74mm** from the top of the unit's side panel.

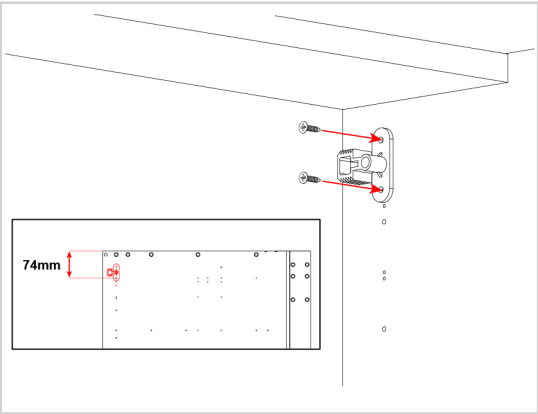

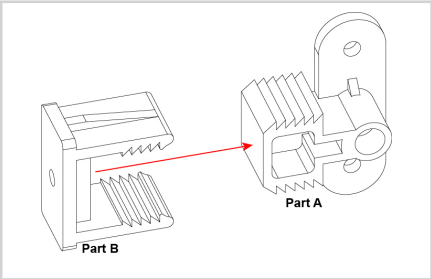

Securing the dummy fixing clips onto Filler F (Part B)

Using one **1x15mm** screw per dummy fixing clip (Parts B), space them evenly onto the inside face at the bottom of Filler F, position them **56mm** from the top face and **26mm** from the edges to the screw hole of Parts B.

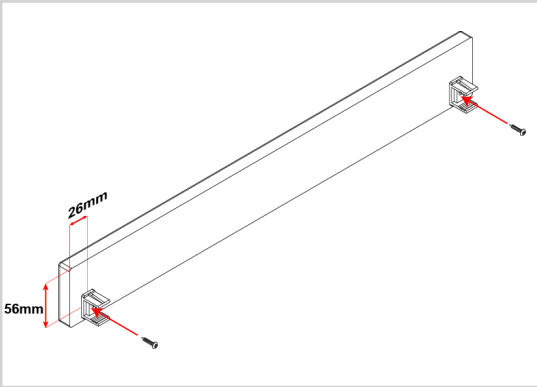

Fixing Filler F to the unit

Make sure Filler F is aligned with the frontals next to it.

With the unit upside down secure Filler f with **1x15mm screw** per small L bracket to base of unit as shown.

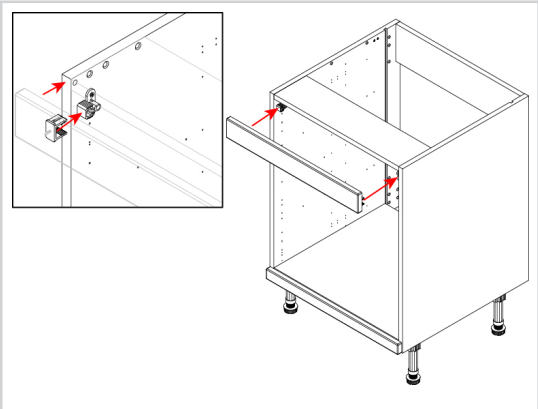

Notching out the end panels (when required)

In order to allow for any horizontal pipework running behind the unit, some units will require the back of unit's side to be notched out.

Create a notch for the horizontal pipes at the back of the end panels using a jigsaw.

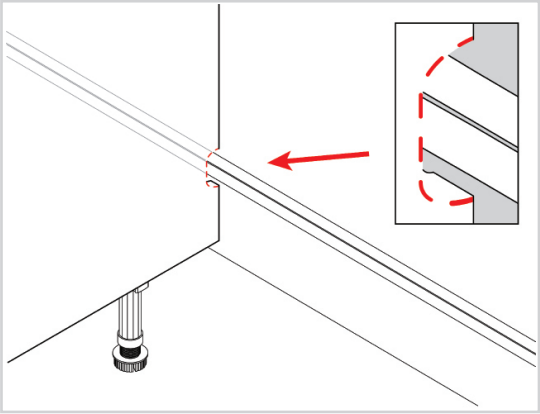

Lifting the unit into place

When lifting the unit into place do **not** tilt as this can damage the legs.

Place the unit against the wall and align it with the wall markings that will have been drawn during the room preparation stage.

Use a spirit level to ensure the unit is level from front to back, left to right, and diagonally. Adjust the legs if required.

The leg height can be adjusted by turning the foot of the leg clockwise or anti-clockwise.

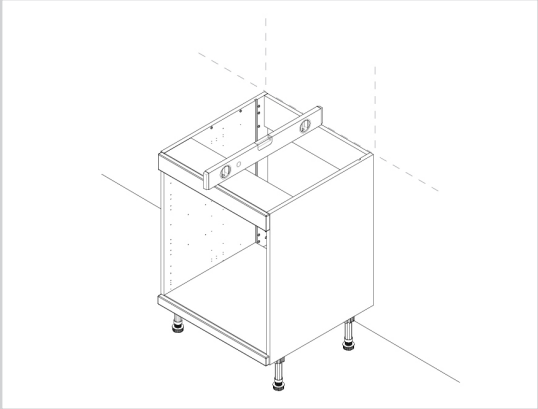

No screws or wall plugs are provided for attaching the unit to the wall. This is due to variations in wall construction.

Before drilling into the wall you MUST check for any hidden services or pipework within the walls.

Drilling the pilot holes

Drill a pilot hole through the back panel making sure to lightly mark the wall to indicate where the wall fixing should be placed. The hole should be located as per the diagram, in the centre and close to the top of the unit.

For guidance on the appropriate wall fixing for each wall type, please consult the "**Room Preparation Guide**."

Once complete lift and move the unit away from the wall. Using the pilot hole, drill a hole to suit the fixing. Place the wall fixing within the hole. Lift and reposition the unit, ensuring it is level and in line with the wall markings.

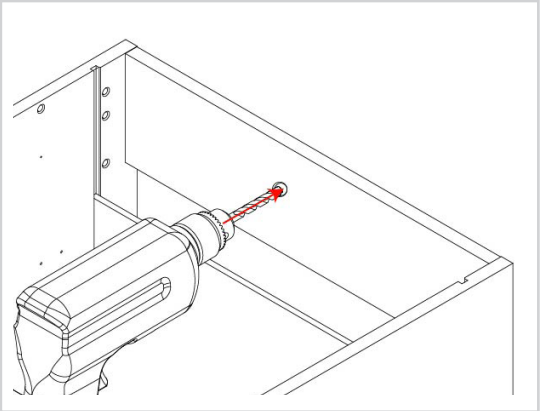

Securing to adjacent units

Clamp together the two units, checking the front edges are level and flush.

Using the screws provided, **1x30mm** screw should be fixed into each corner of the carcase side.

The screws can be concealed by placing them behind the appliance. The cover caps can be used to hide any visible screw heads that remain.

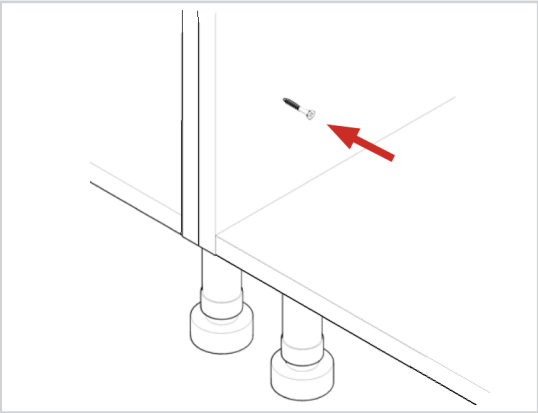

Cleaning the unit

Finally, the unit should be thoroughly cleaned to remove any debris that may have accumulated during the installation.

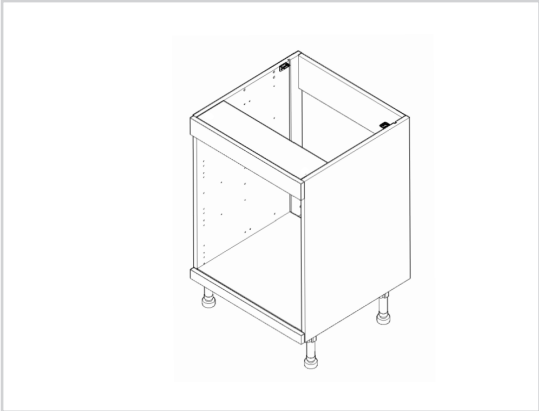

Store the plinth clips and the remaining 15mm screws.
These will be used later when attaching the plinth.

Store the L-brackets.
These will be used later when installing the worktop (laminate or timber).