EASY-FIT

Tower Unit

Boiler Tower (Door, Solid Top, 5 Legs) - Fitting Guide

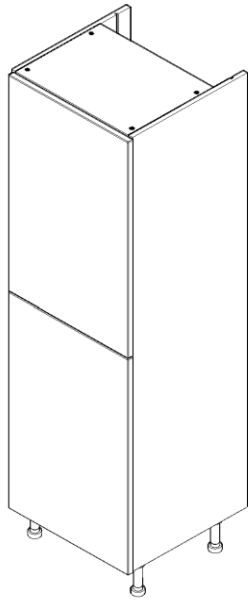

2070x600
50/50

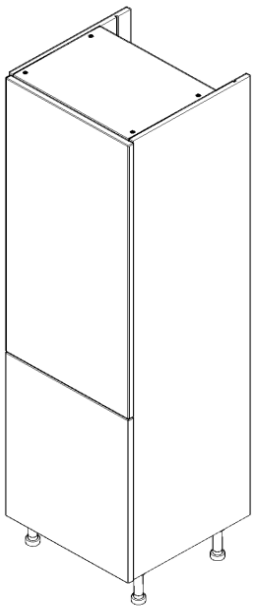

2070x600
70/30

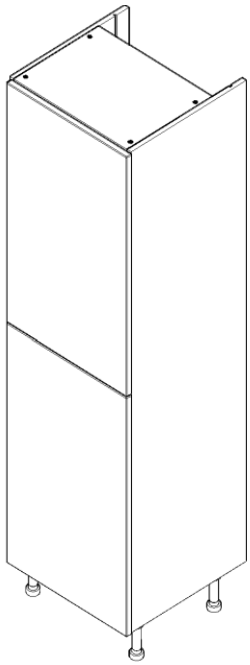

2250x600
50/50

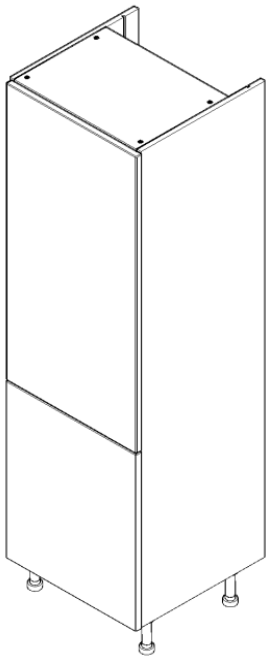

2250x600
70/30

Units Parts

6X30mm screws

30x15mm screws

18x Cover Caps

5x Legs

5x Leg Brackets

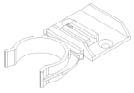

2x Plinth Clips

2x L Bracket

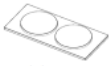

5x Door Buffer

Tools Required

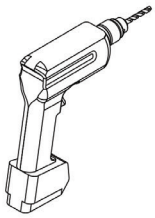

Drill

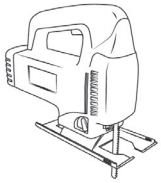

Jigsaw

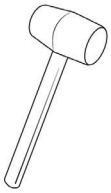

Mallet

Screwdriver

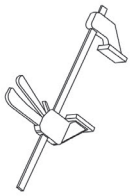

Clamp

Spirit Level

Tape Measure

Remember to take care when unpacking. Please keep your workspace clean, clear and tidy when working. This will help keep all items safe from any damages. Any waste cardboard or plastic should be flattened down and placed in the bin.

A minimum of two people will be needed to lift the unit.

Removing the frontal

Before installing the unit, remove the frontal by pulling the release catch.

Place the frontal in the door safe along its longest length.

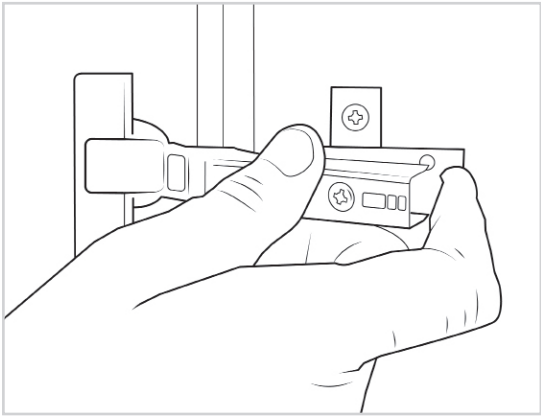

Removing the fittings

Remove all content so the unit is empty.

All fittings should be kept on a clean and level surface and the shelf placed in the door safe along its longest length.

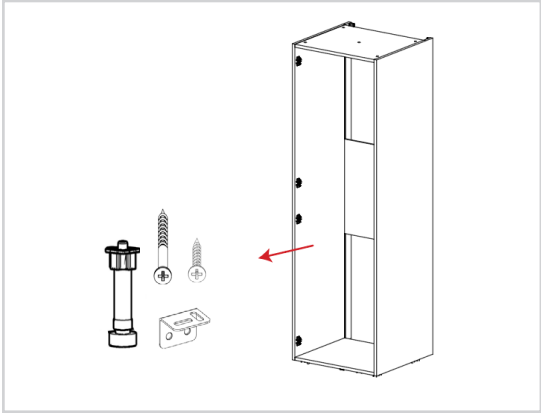

Positioning the leg brackets

Locate the leg brackets and position, as shown in the diagram. Ensure the leg brackets are rotated so the flange covers the outer edge, as this provides support for the edge of the unit.

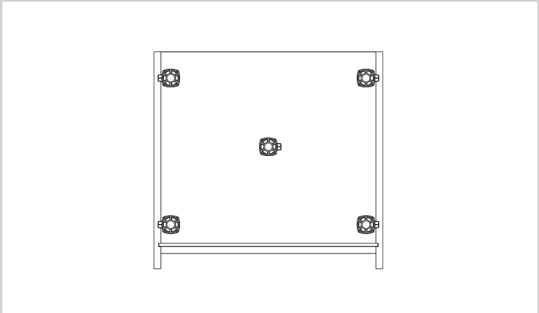

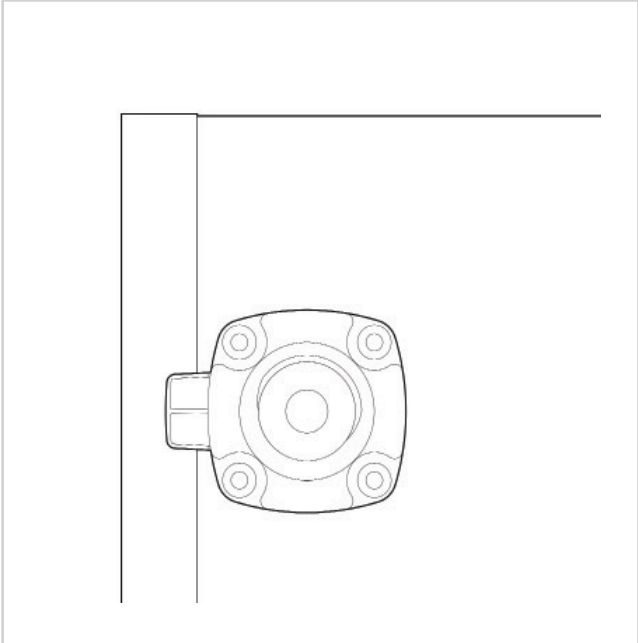

Fixing the leg bases

Secure each of the leg brackets into place with **4x15mm** screws per bracket.

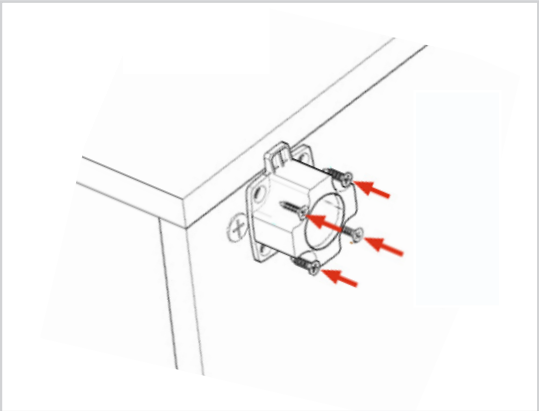

Inserting the legs

Push each leg firmly down into the leg bracket. Adjusting each leg to **155mm**.

Adjust the legs to the correct height by turning clockwise or anti-clockwise.

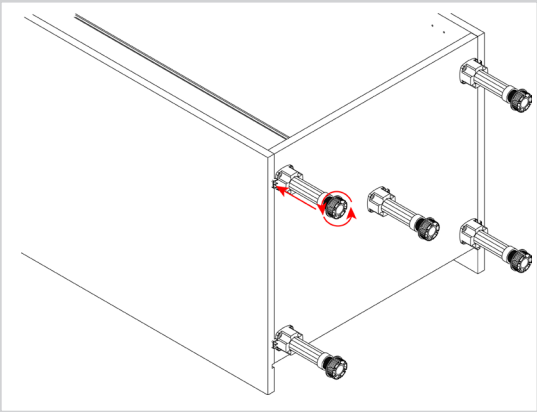

Securing the L-bracket

Secure each of the L-brackets to the upper rear of the unit using **2x15mm** screws at each side.

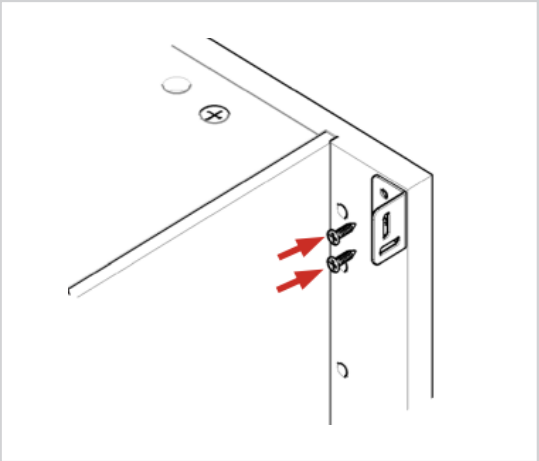

Removing the transport panel

Slide the transport panel out from the back of the unit and discard the panel.

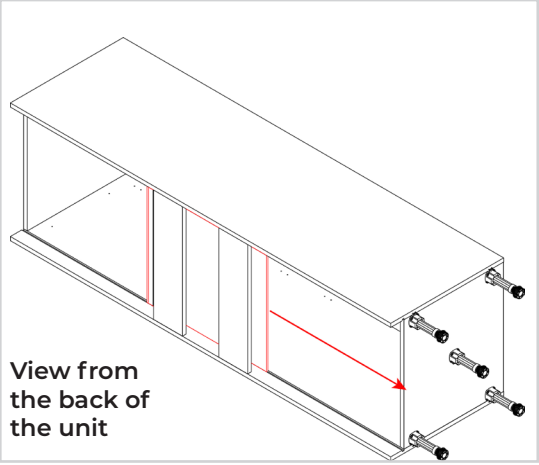

Notching out the side panels (when required)

In order to allow for any horizontal pipework running behind the unit, some units will require the back of unit's side to be notched out.

Create a notch for the horizontal pipes at the back of the end panels using a jigsaw.

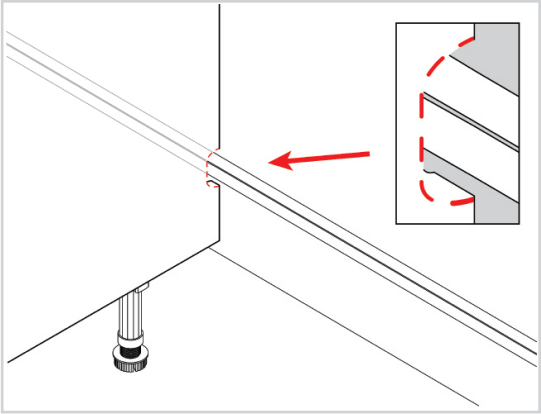

When placing the tower unit over the boiler, always refer to the boiler's manual to ensure all clearances are met.

Lifting the unit into place

Lift and rotate the unit. Do **not** tilt the unit on the legs, as this can cause damage.

Place the unit against the wall and align it with the wall markings that will have been drawn during the room preparation stage.

Use a spirit level to ensure the unit is level from front to back, left to right, and diagonally. Adjust the legs if required.

The leg height can be adjusted by turning the foot of the leg clockwise or anti-clockwise.

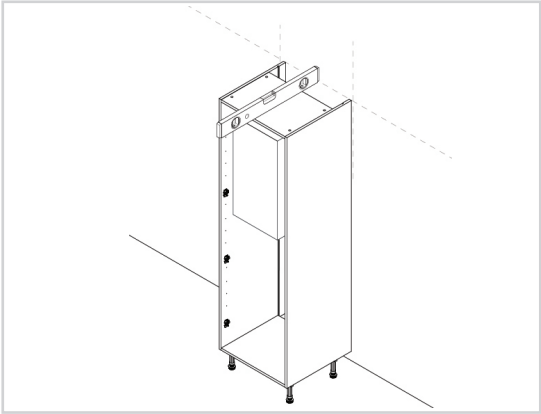

**No screws or wall plugs are provided for attaching the unit to the wall.
This is due to variations in wall construction.**

Before drilling into the wall you MUST check for any hidden services or pipework within the walls.

Attaching the unit tower to the wall

Fix the unit to the wall through the L-brackets as shown in the image (these fixings are not provided).

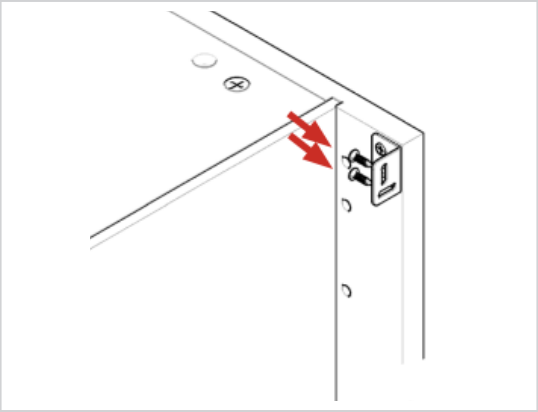

Securing to adjacent units

Clamp together the two units, checking the front edges are level and flush.

Using the screws provided, **1x30mm** screw should be fixed into each corner of the carcase side.

The screws can be concealed by placing them behind the shelf or behind the hinge plates. The cover caps can be used to hide any visible screw heads that remain.

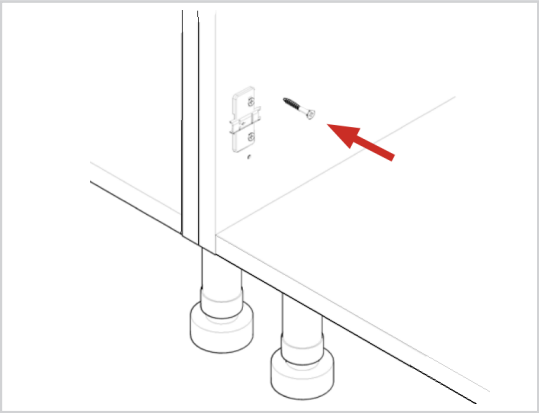

Attaching the frontal

The frontal should be re-attached to the unit by clipping the hinges onto the hinge plates. The bar of the hinge needs to be positioned into the hooks on the hinge plate. Then the rear of the hinge pushed to the hinge plate until it clicks.

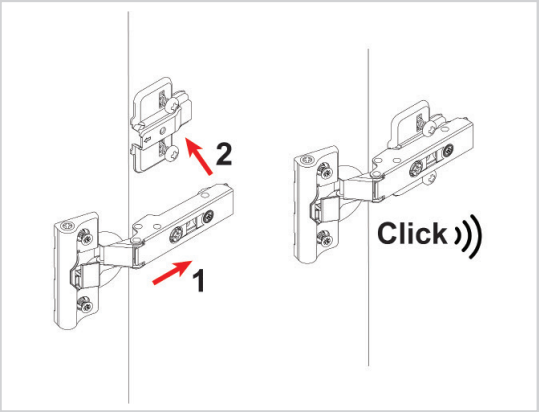

Adding the door buffers

Position **1x** door buffer at the top and bottom corners of the carcase, as illustrated in the image.

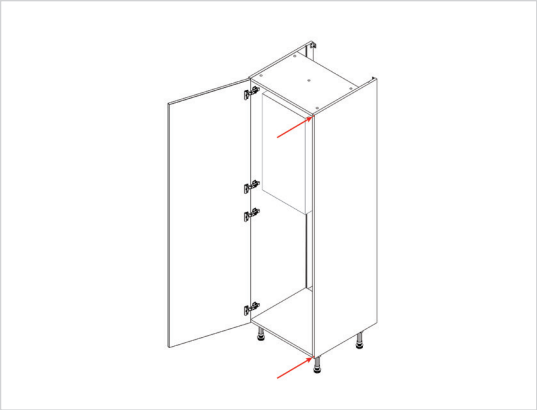

Removing the hinge cover cap

Use a flathead screwdriver to remove the hinge cover cap by inserting it into the slot of the cover cap and twisting.

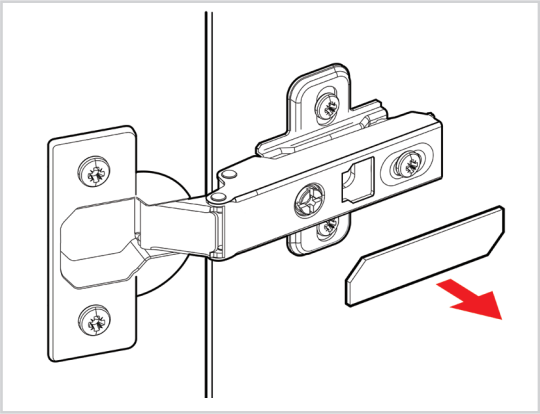

Adjusting the hinge

To adjust the hinges, use a screwdriver as required at points 1 and 2.

Point 1 -Will adjust the frontals left and right.

Point 2 - Will adjust the frontals in and out.

Point 3 - Will adjust the height of the frontal. Re-tighten the screw.

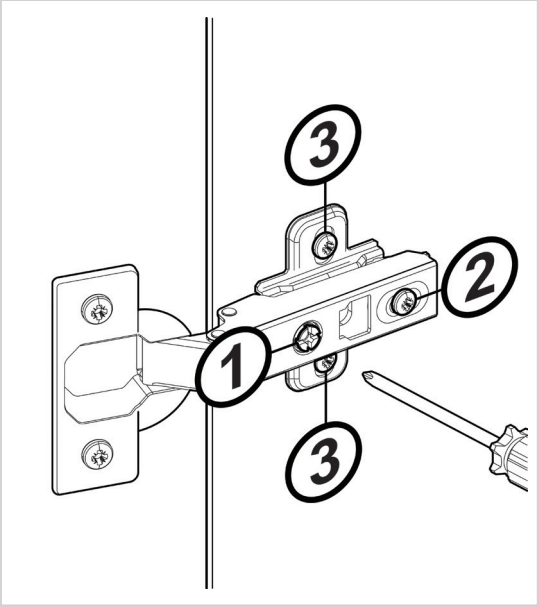

Fitting the hinge cover cap

Fit the hinge cover caps to the hinges by pressing down to secure.

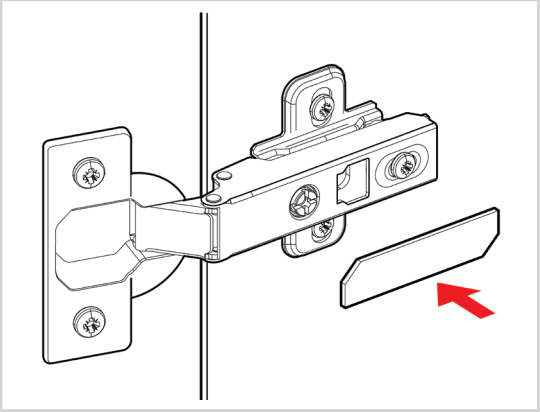

Attaching the frontals together (if required)

Align the doors to join together using **2x** fixing plates to the back of both frontals. Ensure a **4mm** gap is maintained between each frontal.

Take care when inserting screws into a handless kitchen as handle groove is thinner.

Screw in place using **4x15mm** screws per fixing plate.

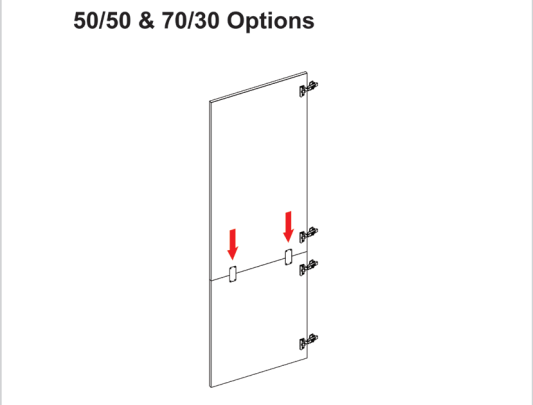

Cleaning the unit

Finally, the unit should be thoroughly cleaned with a vacuum or dust pan and brush to remove any debris that may have accumulated during the installation.

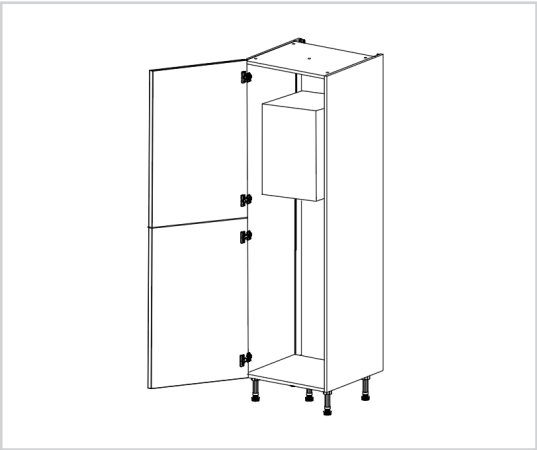

Store the plinth clips and the remaining 15mm screws.
These will be used later when attaching the plinth.