EASY-FIT

Wall Unit

Plate Rack Unit - Fitting Guide

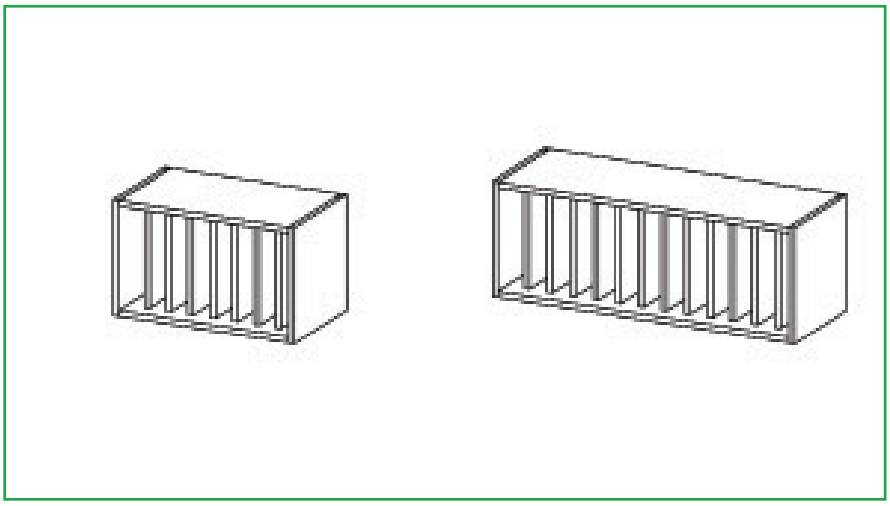

Units Parts

4x30mm screws

4x20mm screws

2x Corner Gusset Plate

2x Wall Hanging Bracket

2x Hanging Bracket Cover Caps

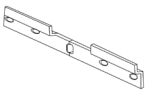

1x Wall Hanging Plate Snap off (x2)

Shelf Supports

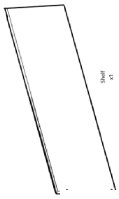

Shelves

Tools Required

Drill

Screwdriver

Clamp

Spirit Level

Tape Measure

Before installing any wall cabinets, ensure the wall construction is strong enough to support the weight of the fully loaded unit and that appropriate fixings are used. Wall cabinets must be fully secured using all supplied hanging brackets and corner gussets, as specified in the installation guide.

If you are unsure, seek professional advice before proceeding.

Remember to take care when unpacking. Please keep your workspace clean, clear and tidy when working. This will help keep all items safe from any damages. Any un-needed cardboard or plastic should be flattened down and placed in the bin.

A minimum of two people will be needed to lift the unit.

Unpacking the parts and fittings

Remove all content from the packaging and ensure to familiarise yourself with all unit parts and fittings.

All parts and fittings should be kept on a clean and level surface and the frontal and shelf placed in the door safe along their longest length.

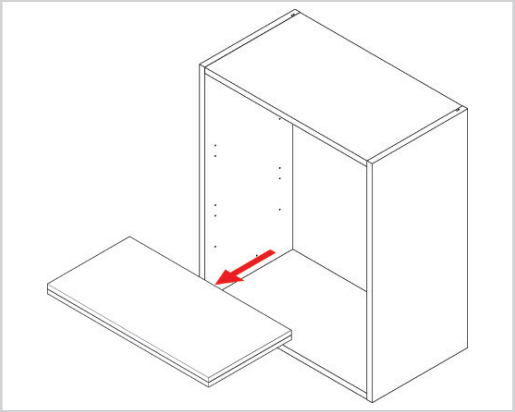

Not all shelving can be removed from the wine rack or plate rack unit.

The next few steps will take place on the back of the wall unit.

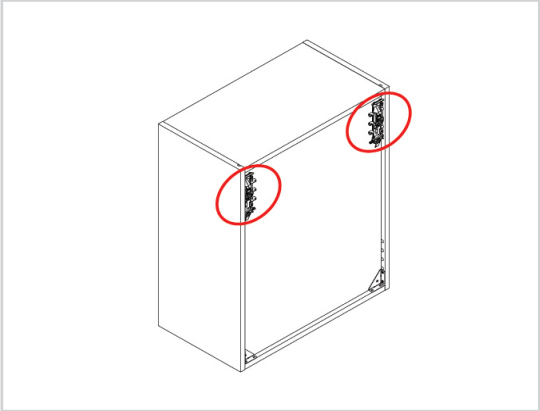

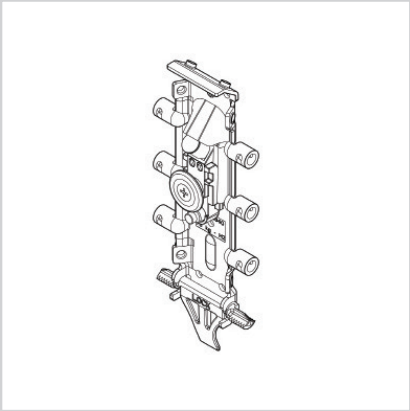

Installing the wall hanging bracket

Insert the hanging bracket into pre-drilled holes.

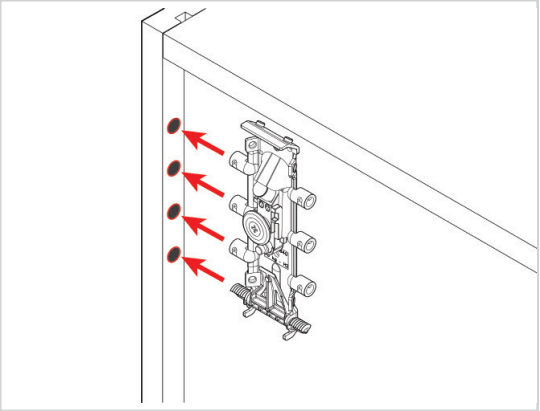

Rotate the locking lever down **180 degrees.**

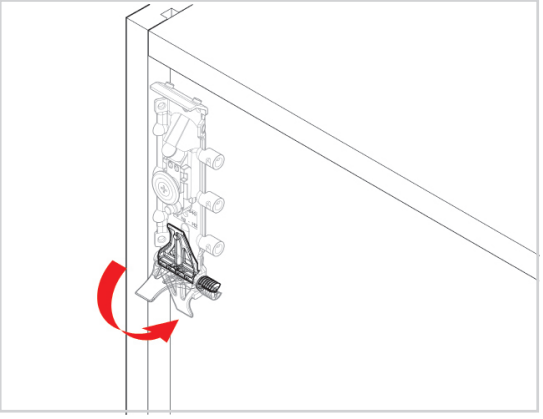

Secure with provided **2 x 20mm** screws per bracket.

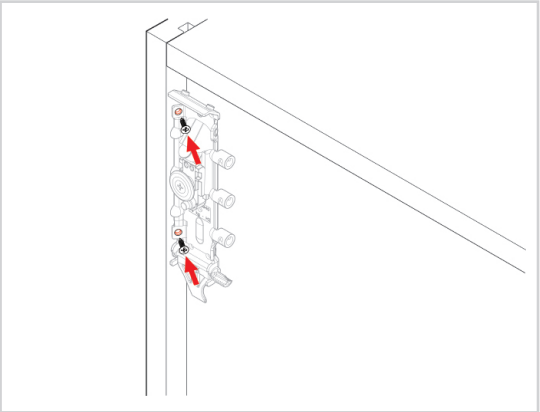

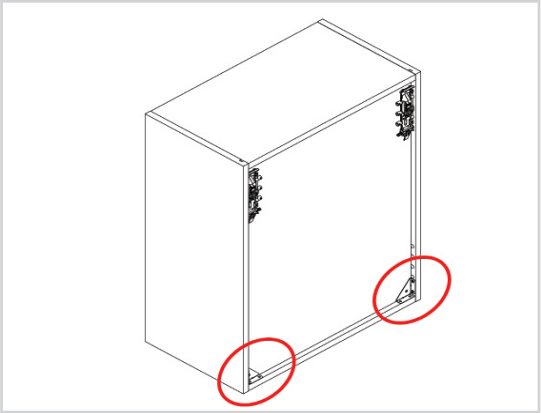

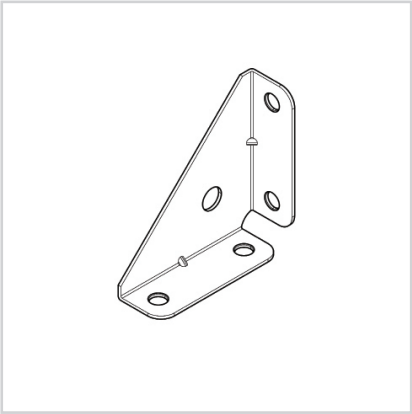

Installing the corner gussets

Secure the corner gussets to both the bottom corners of the wall unit using **4x15mm** screws per gussets.

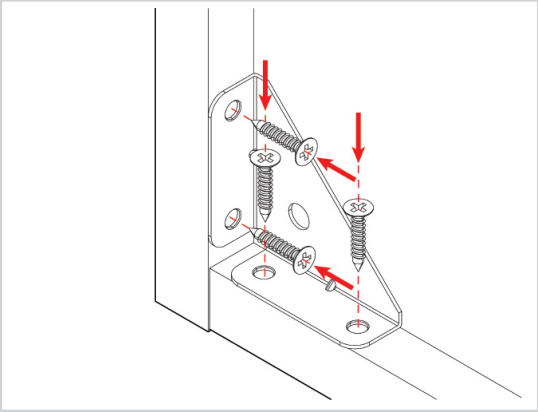

Creating the pilot holes

Drill small pilot hole through the back panel of the unit through the gusset.

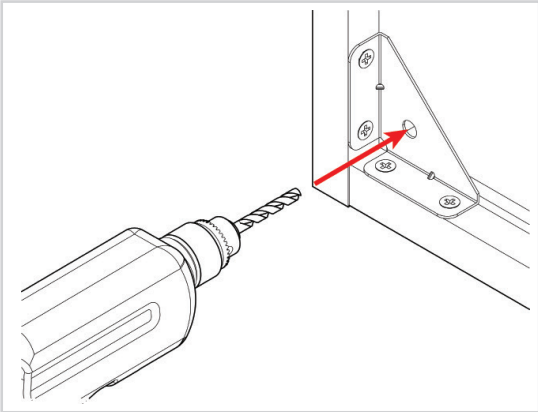

Finding the fixing point for the wall brackets

The fixing point for the wall hanging brackets are **125mm** below the top of the units.

Draw a line on the wall **125mm** below the top line of the unit (Already marked).

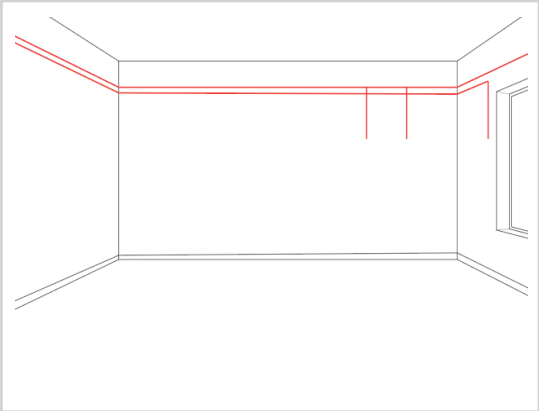

Draw a vertical line **20mm** inside either side of the pre marked wall unit positions.

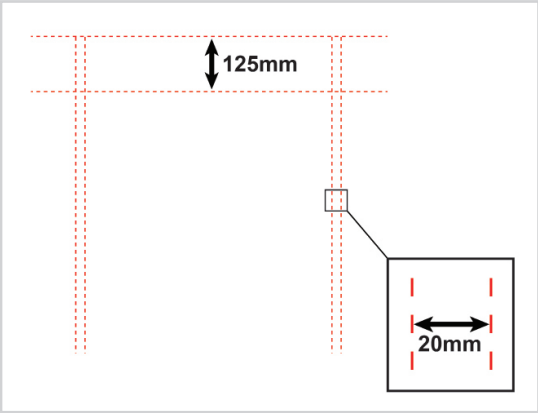

Snapping the wall hanging plate

Bend the wall hanging plate down the middle until it snaps into two pieces.

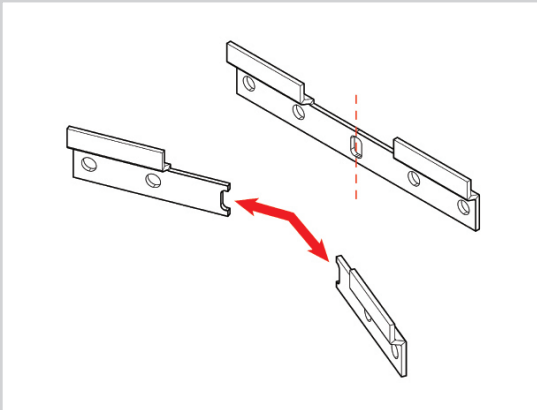

No screws or wall plugs are provided for attaching the unit to the wall. This is due to variations in wall construction.

Before drilling into the wall you MUST check for any hidden services or pipework within the walls.

Attaching the wall hanging bracket to the wall

Position the **2x** hanging brackets as shown and mark the holes onto the wall.

Remove the hanging bracket, then drill holes into the wall of an appropriate size for the screws required

Attach the hanging bracket onto the wall by screwing through the holes on the hanging bracket into the holes on the wall.

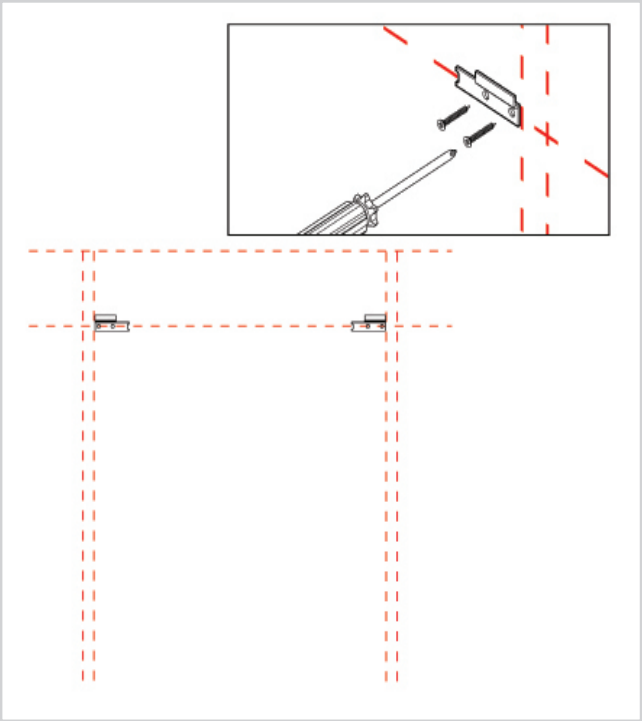

In order to complete the steps below the red screw found on the wall unit on the hanging bracket will need to be screwed all the way out.

Lifing the unit into place

Lift the unit against the wall slightly higher than its finished height. Lower the unit down onto the wall hanging bracket.

Before releasing the unit, gently tug it to ensure it is securely supported by the hanging brackets.

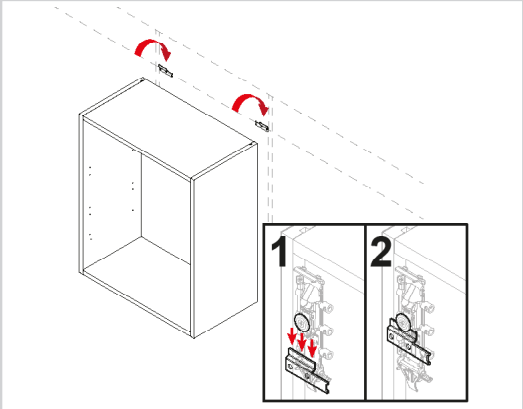

Adjusting the wall brackets

Using the points below to adjust the unit to suit.

Place the cover cap once adjustmentshas taken place.

A- Rotate the screw clockwise to move the unit up. Anti-clockwise for down.

B- Adjust the depth using centre screw.

C- Screw the red screw until it touches the plate to lock in position.

Place cover caps over the wall brackets.

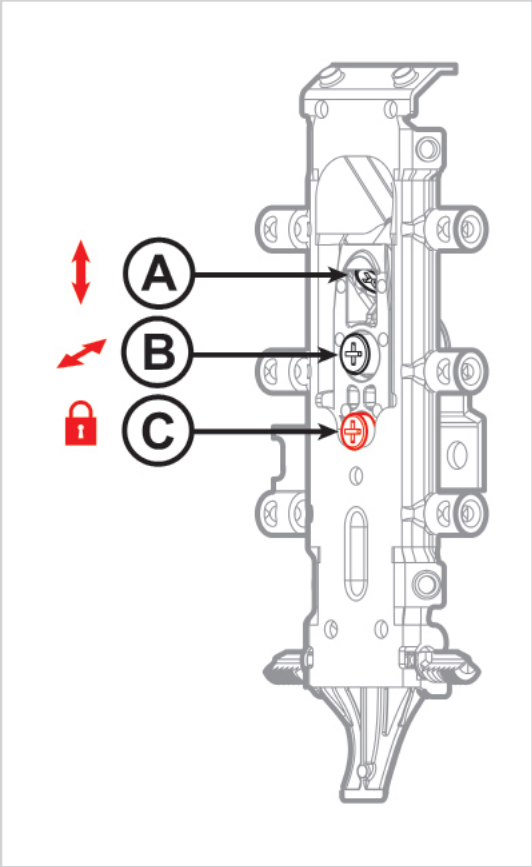

Double check units are level after adjustments.
Use a spirit level to ensure the units are level front to back, left to right and diagonally.

No screws or wall plugs are provided for attaching the unit to the wall. This is due to variations in wall construction.

Before drilling into the wall you MUST check for any hidden services or pipework within the walls.

Fixing the wall unit to the wall

Fix the unit to the wall through the gussets using the appropriate screws to attach to the wall.

Use cover cap to conseal the screws.

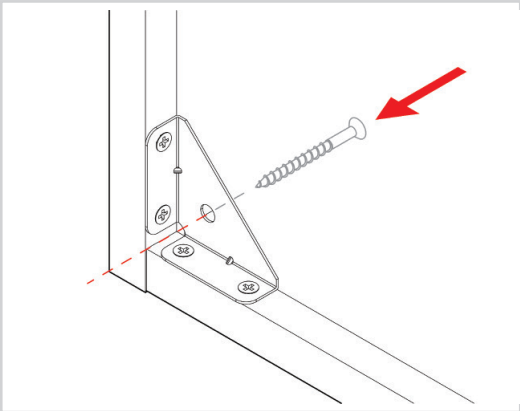

Please note that the open wine rack units have fixed shelf heights that cannot be adjusted

Finding the shelf height

Position the shelf pegs into the pre-drilled holes. The shelf can be positioned at **3** different heights, as shown in the diagram.

Place the shelf into position so the pin of the shelf peg is inserted into the pre-drilled holes.

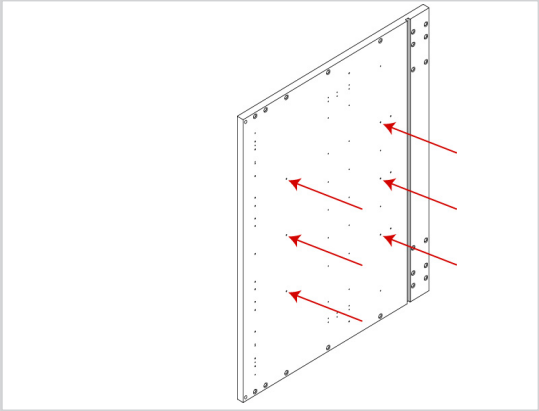

Securing to adjacent units

Clamp together the two units, checking the front edges are level and flush.

Using the screws provided, **1x30mm** screw should be fixed, from the inside of the adjacent units, into each corner of the unit.

The screws can be concealed by placing them behind hinge plates or behind shelves. Cover caps can be used to hide any visible screw heads that remain.

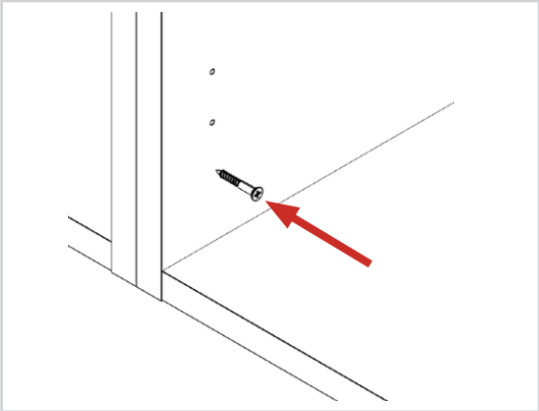

Inserting the shelf into position (if required)

The shelves will touch the back panel when installed, if there is a gap between the back panel and shelf then the shelf has been installed back to front and the shelf needs to be rotated.

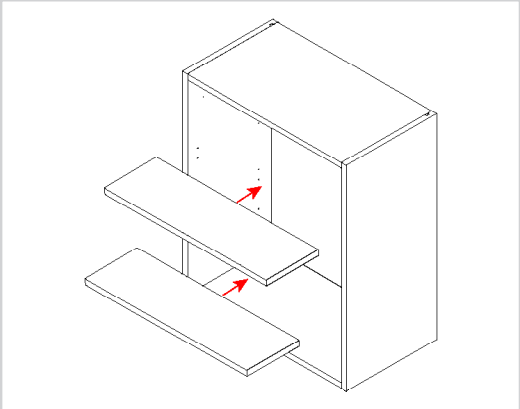

Cleaning the unit
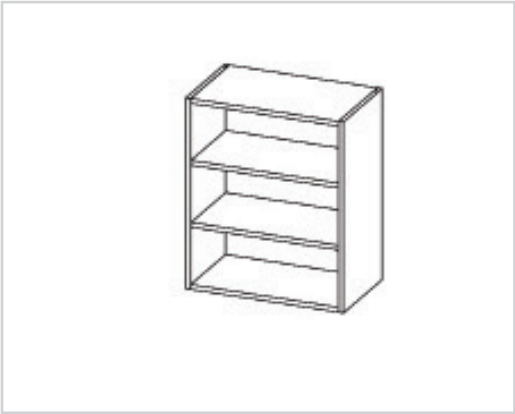
Finally, the unit should be thoroughly cleaned to remove any debris that may have accumulated during the installation.