INFINITY

Wall Unit

Horizontal Open Shelf/Wine Rack Feature Unit - Fitting Guide

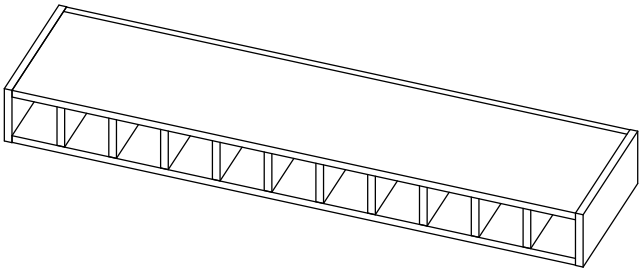

Wine Rack

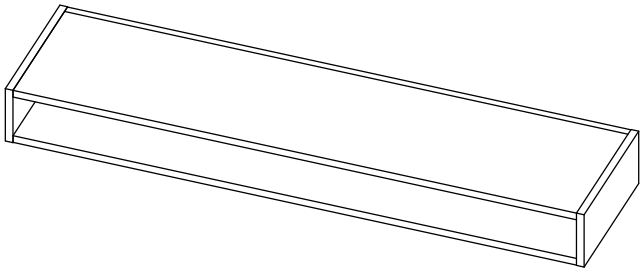

Open Shelf

Unit Parts

8x
Cover Stickers

Tools Required

Drill

Screwdriver

Clamp

Spirit Level

Tape Measure

Before installing any wall cabinets, ensure the wall construction is strong enough to support the weight of the fully loaded unit and that appropriate fixings are used. Wall cabinets must be fully secured using all supplied hanging brackets and corner gussets, as specified in the installation guide.

If you are unsure, seek professional advice before proceeding.

Remember to take care when unpacking. Please keep your workspace clean, clear and tidy when working. This will help keep all items safe from any damages. Any un-needed cardboard or plastic should be flattened down and placed in the bin.

A minimum of two people will be needed to lift the unit.

Unpacking the cover stickers

Remove the cover stickers from the unit.

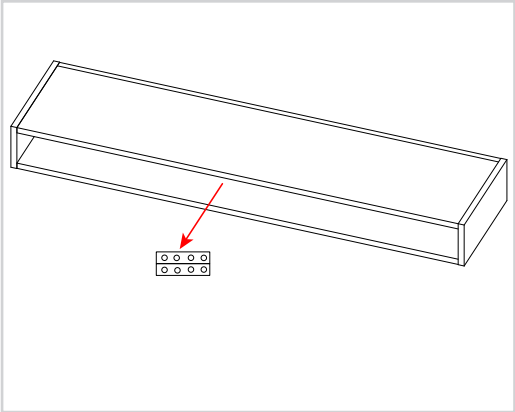

Lifting the unit into position

Lift and clamp the unit into position and clamp together the unit with the adjacent units.

Ensure the unit is level and parallel with the adjacent unit doors.

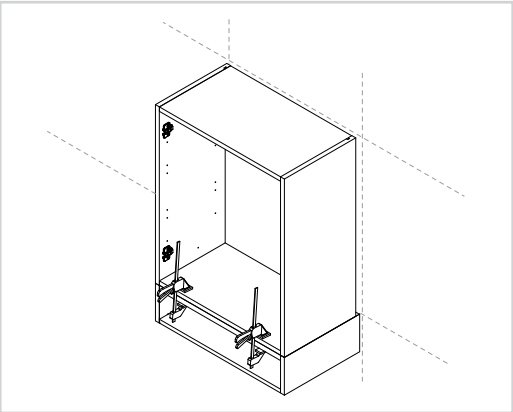

Securing to adjacent units (500mm-700mm)

Use **4x30mm** screws to fix the units together. See image for positioning.

Depending on the unit configuration you have planned, screws should be used to secure the unit to the units above or below.

Place cover stickers on the screw heads to conceal.

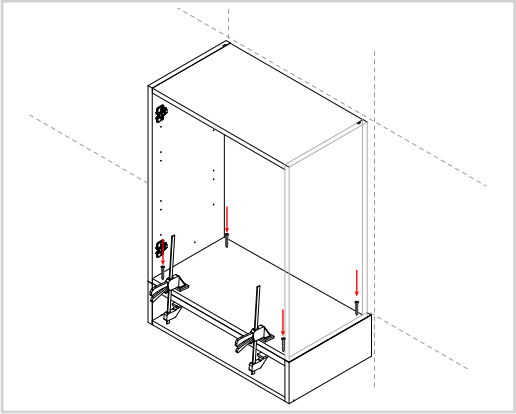

Securing to adjacent units (800mm-1200mm)

Use **6x30mm** screws to fix the units together. See image for positioning.

Depending on the unit configuration you have planned, screws should be used to secure the unit to the units above or below.

Place cover stickers on the screw heads to conceal.

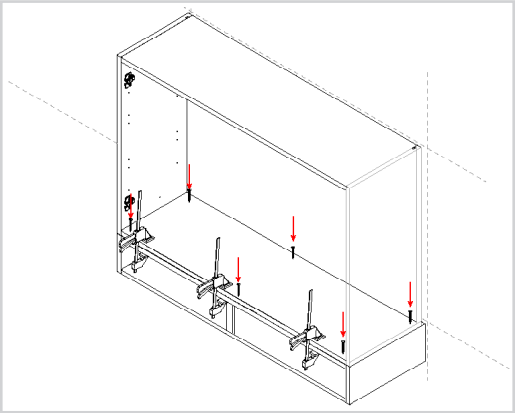

For each additional 600mm add another two screws, making sure they are evenly spaced.

Cleaning the unit

Finally, the unit should be thoroughly cleaned to remove any debris that may have accumulated during the installation.

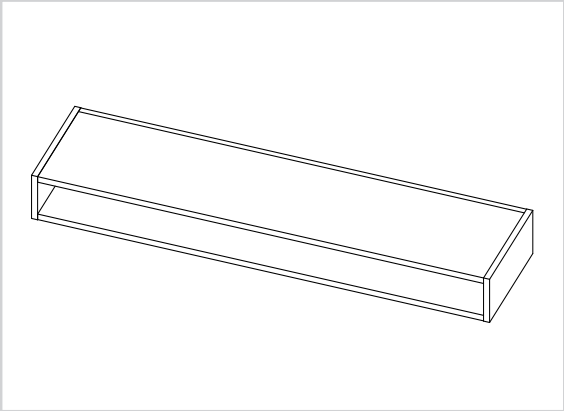

INFINITY

Base/Tower Unit

Horizontal Open Shelf/Wine Rack Feature Unit - Fitting Guide

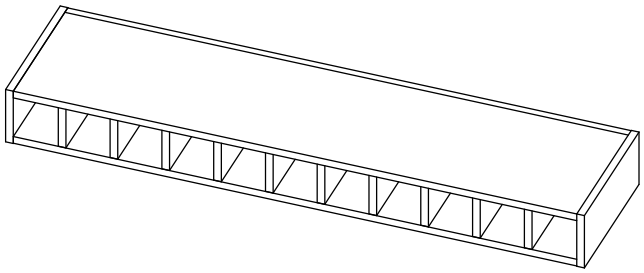

Wine Rack

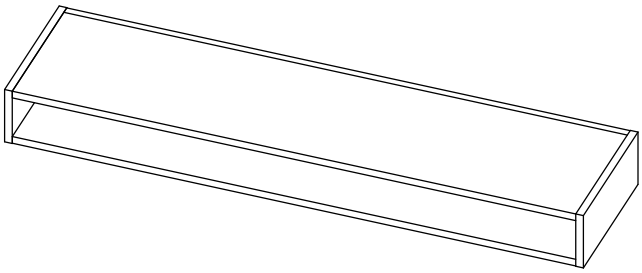

Open Shelf

Unit Parts

8x
Cover Stickers

Tools Required

Drill

Screwdriver

Clamp

Spirit Level

Tape Measure

Remember to take care when unpacking. Please keep your workspace clean, clear and tidy when working. This will help keep all items safe from any damages. Any un-needed cardboard or plastic should be flattened down and placed in the bin.

A minimum of two people will be needed to lift the unit.

Unpacking the cover stickers

Remove the cover stickers from the unit.

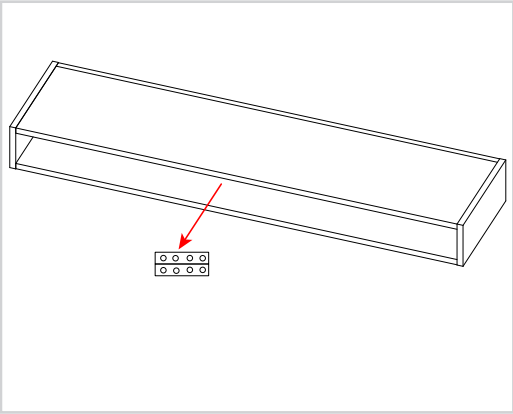

Lifting the unit into position

Lift the unit into position and clamp together the unit with the adjacent units.

Ensure the unit is level and parallel with the adjacent unit doors.

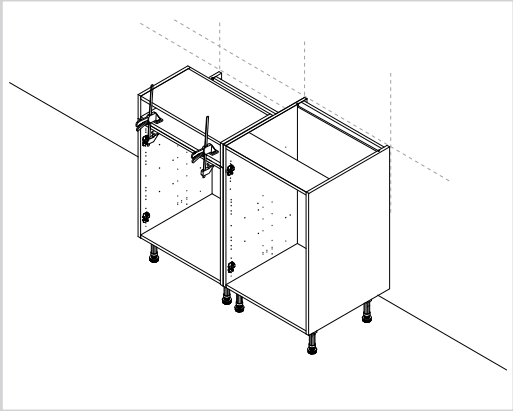

Securing to adjacent units

Use **2x30mm** screws to fix the units together. See image for positioning.

Depending on the unit configuration you have planned, screws should be used to secure the unit to the units above or below.

Place cover stickers on the screw heads to conceal.

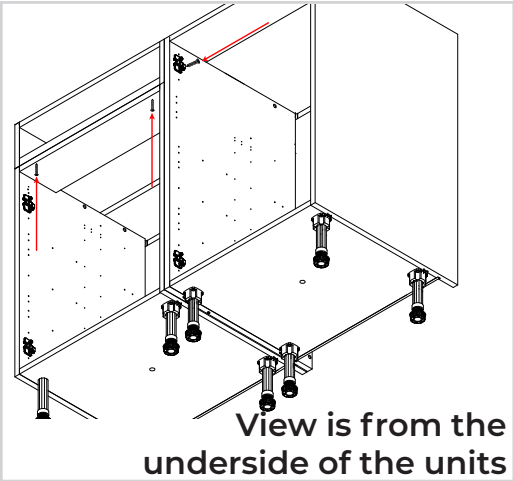

For each additional 600mm add another two screws, making sure they are evenly spaced.

Cleaning the unit
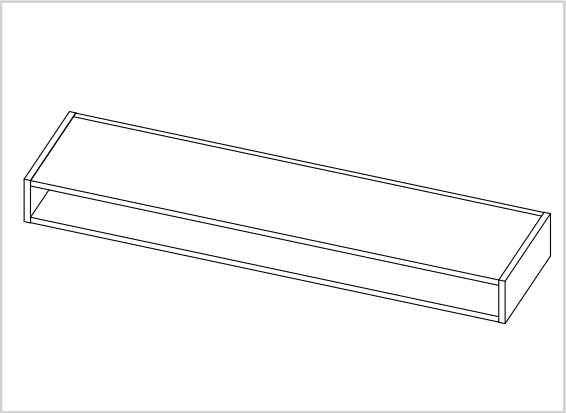
Finally, the unit should be thoroughly cleaned to remove any debris that may have accumulated during the installation.