INFINITY

Base Unit

800 - 1000 Hob Base (Drawer, Open Top, 5 Legs) - Fitting Guide

3 drawer with non- opening drawer

4 drawer with non- opening drawer

5 drawer with non- opening drawer

Units Parts

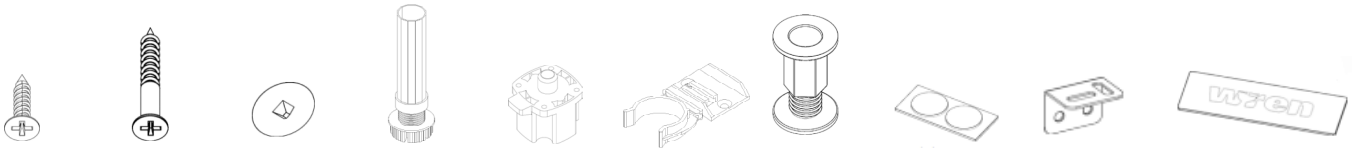

32x 15mm screws | 6x 30mm screws | 18x Cover Caps | 5x Legs | 5x Leg Brackets | 2x Plinth Clips | 2x Space Plug | 5x Door Buffer | 2x L-Brackets | Drawer Covers

Tools Required

Drill | Jigsaw | Mallet | Screwdriver | Clamp | Spirit Level | Tape Measure

Remember to take care when unpacking. Please keep your workspace clean, clear and tidy when working. This will help keep all items safe from any damages. Any waste cardboard or plastic should be flattened down and placed in the bin.

A minimum of two people will be needed to lift the unit.

Removing the drawer, fixtures and fittings

Remove all fixtures and fittings from the drawer and keep on a clean and level surface and grouped by product.

Before installing the unit, remove all drawers leaving the dummy drawer in place. This is done by pulling the drawer all the way out, and then pulling the front of the drawer upwards.

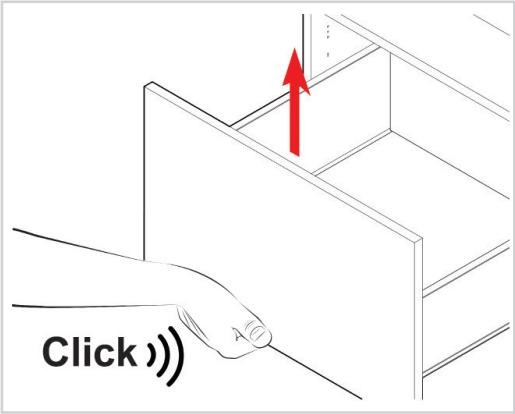

Place the drawers on top of a piece of leftover cardboard to protect them from damage.

Positioning the leg brackets

Locate the leg brackets and position, as shown in the diagram. Ensure the leg brackets are rotated so the flange covers the outer edge, as this provides support for the edge of the unit.

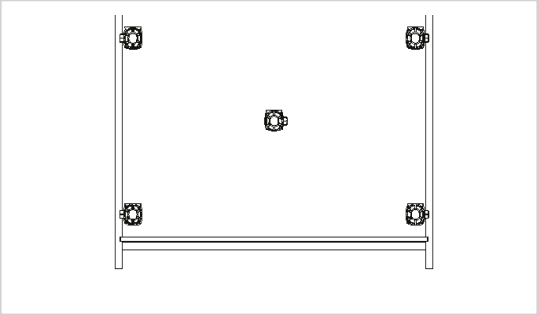

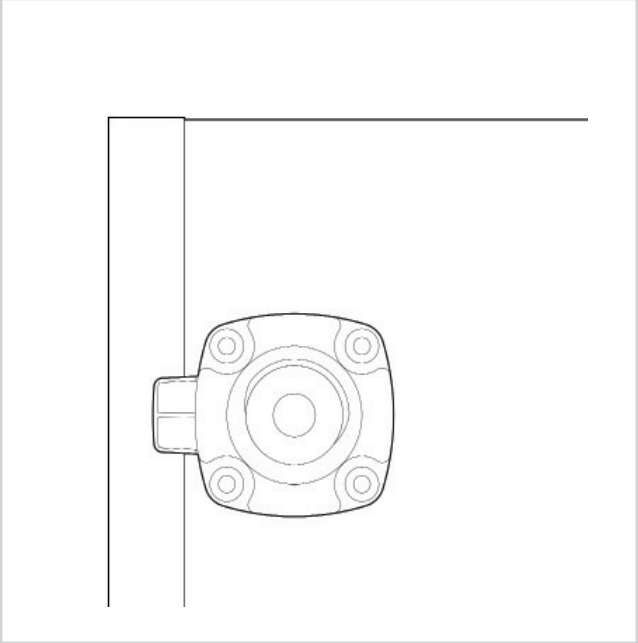

Fixing the leg bases

Secure each of the leg brakets into place with **4x15mm** screws per bracket.

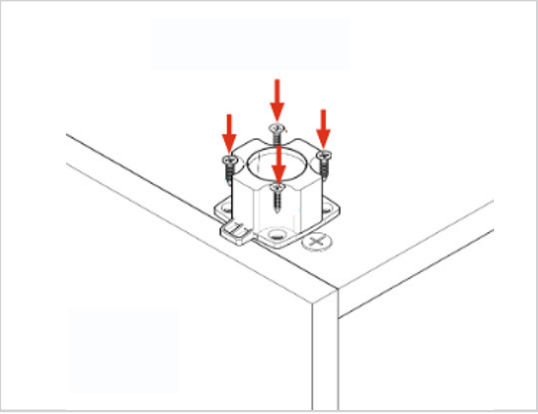

Inserting the legs

Push each leg firmly down into the leg bracket. Adjusting each leg to **155mm**.

Adjust the legs to the correct height by turning clockwise or anti-clockwise.

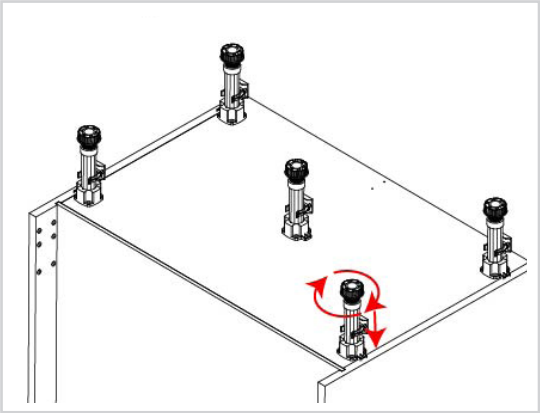

Lifting the unit into place

When lifting the unit into place do **not** tilt as this can damage the legs.

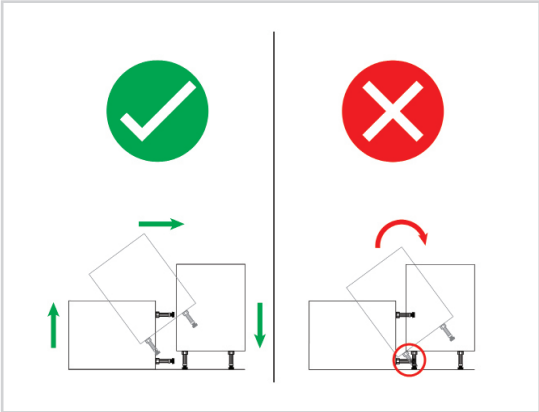

Before drilling into the wall you MUST check for any hidden services or pipework within the walls.

Finding the centre point

Find the centre point measurement of the rear top rail and lightly mark this position.

Transfer the measurement onto the wall at the unit markings, which were drawn at the room preparation stage.

This will be the position of the wall fixing.

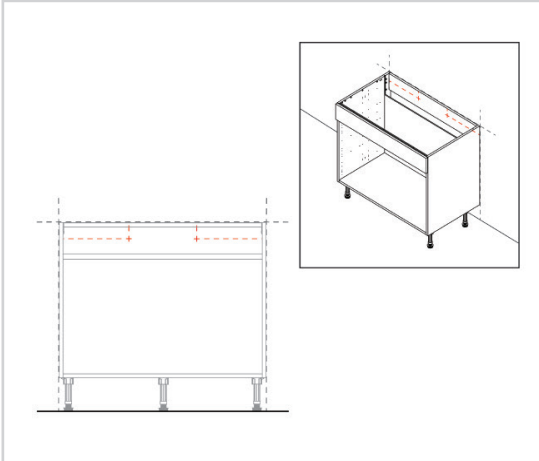

Drilling the unit and wall

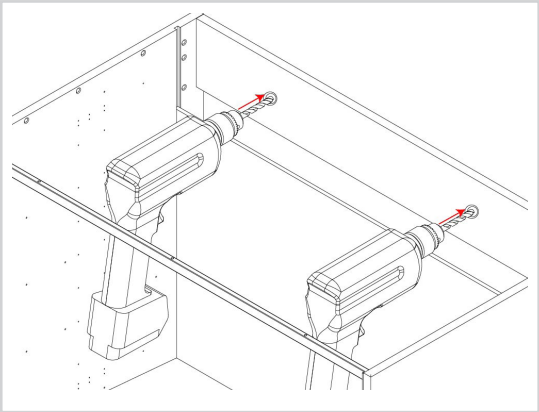

Drill **2** holes through both the rear top rail and the wall at the marked locations. The size of the holes will be determined by the size of wall fixing required.

For guidance on the appropriate wall fixing for each wall type, please consult the "**Room Preparation Guide**."

Place the wall fixing within the holes in the wall.

Notching out the end panels (when required)

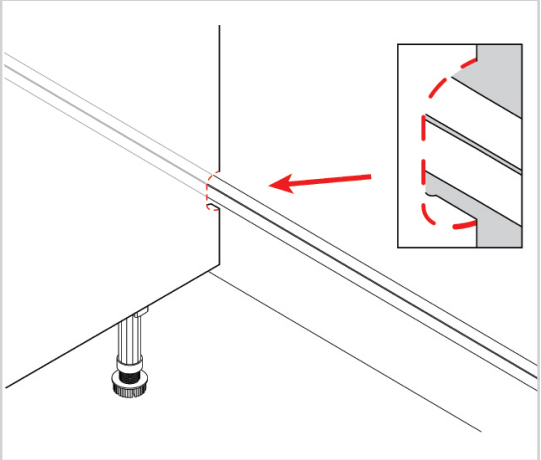

In order to allow for any horizontal pipework running behind the unit, some units will require the back of unit's side to be notched out.

Create a notch for the horizontal pipes at the back of the end panels using a jigsaw.

Sliding the unit into place

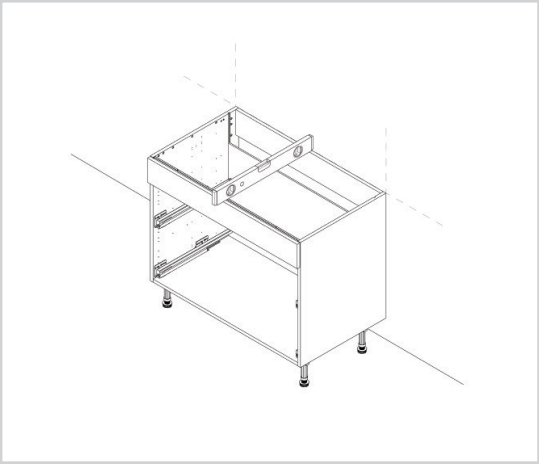

Slide the unit against the wall and align it with the wall markings and the services.

Use a spirit level to ensure the unit is level from front to back, left to right, and diagonally. Adjust the legs if required.

The leg height can be adjusted by turning the foot of the leg clockwise or anti-clockwise.

No screws are provided for attaching the unit to the wall.
This is due to variations in wall construction.

Inserting the screws

Insert the screws into the drilled holes and tighten to the wall.

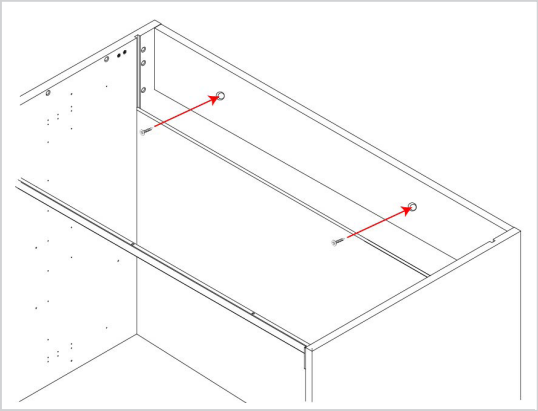

Securing to adjacent units

Clamp together the two units, checking the front edges are level and flush.

Using the screws provided, **1x30mm** screw should be fixed into each corner of the carcase side.

The screws can be concealed by placing them behind the shelf or behind the hinge plates. The cover caps can be used to hide any visible screw heads that remain.

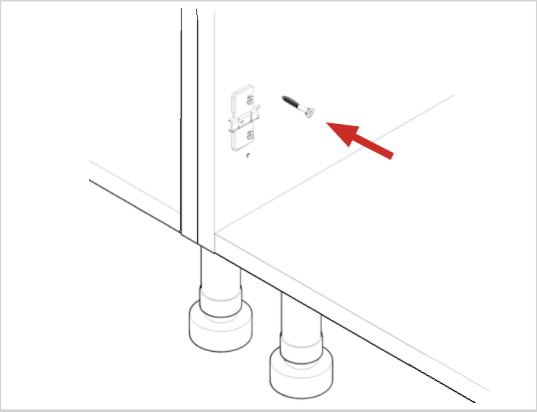

Inserting the drawers

Slide the drawer onto the runners, make sure the runner mechanism and the drawer sides' groove line up.

Push the drawer back into the unit after it has been positioned on the runners; you should hear a click.

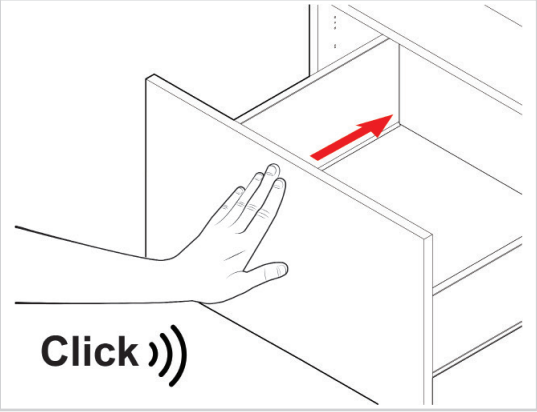

Adding the drawer buffers

Add **1x** door buffer to each side of each drawer along the carcase edge, as show in the diagram.

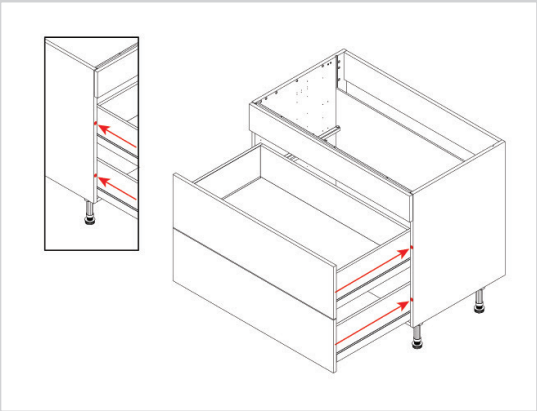

Adjusting the frontal

Adjust frontal to suit, as shown in the image.

Point 1 - Will adjust the frontal left and right.
Point 2a - Will lock/unlock point 2b.
Point 2b - Will adjust the frontal up and down.
Point 3 - Will adjust the frontal releasing fixing clip. Screw while applying downward. pressure to release.

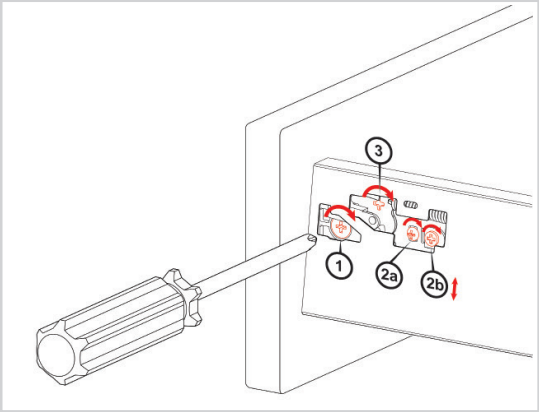

Fitting the drawer cover caps

Fit the drawer cover caps over the drawer side adjustment.

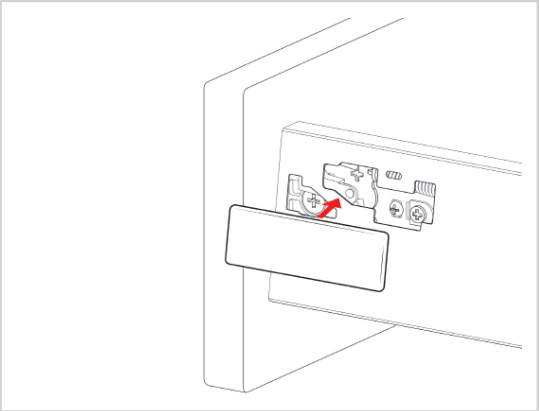

Cleaning the unit

Finally, the unit should be thoroughly cleaned to remove any debris that may have accumulated during the installation.

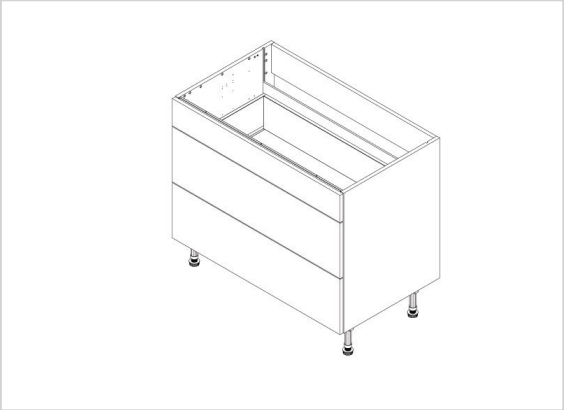

Store the plinth clips and the remaining 15mm screws.
These will be used later when attaching the plinth.

Store the L-brackets.
These will be used later when installing the worktop (laminate or timber).