INFINITY

Base Unit

1000, 2 Drawer And 3 Drawer Inc Dummy Drawer Downdraft Unit, Fitting Guide

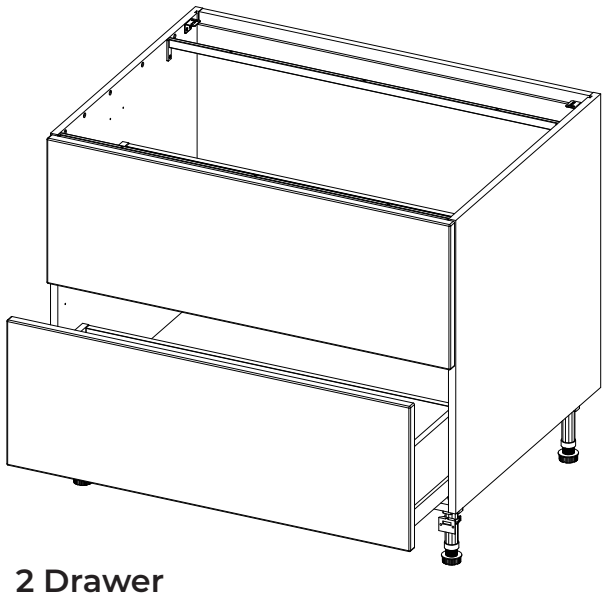

2 Drawer

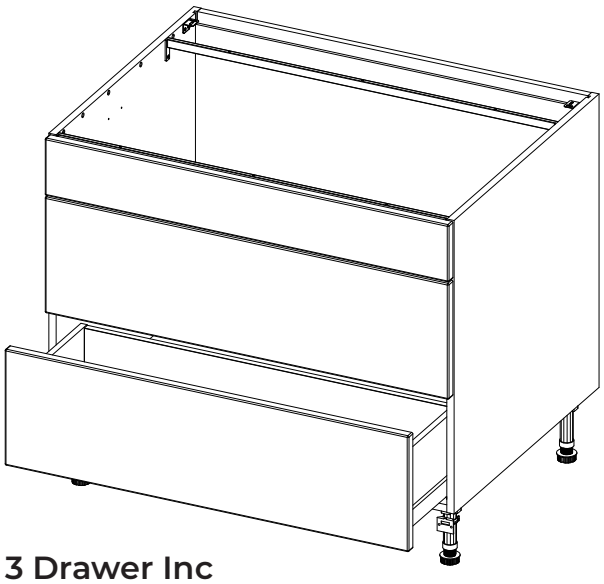

3 Drawer Inc
Dummy Drawer

Tools Required

Drill

Screwdriver

Mallet

Spirit Level

Pencil

Making Tape

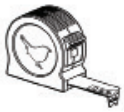

Tape Measure

Unit Parts

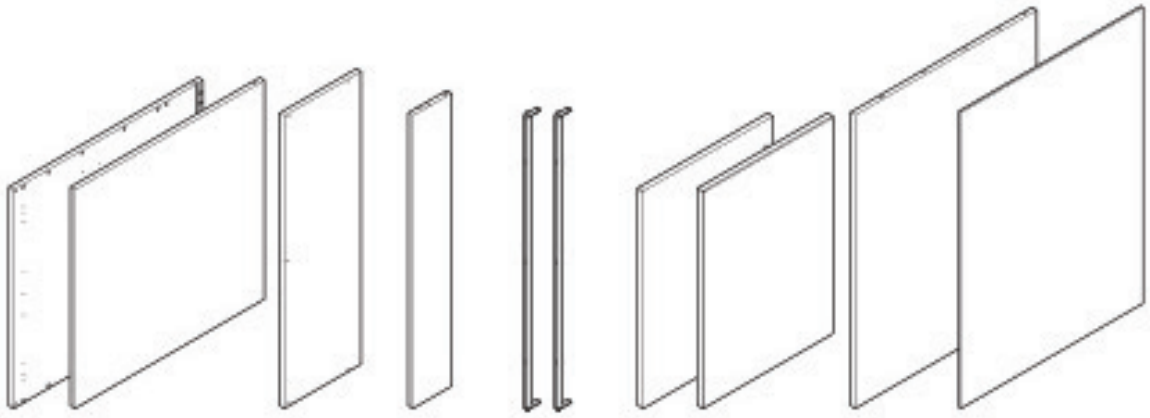

2x Side Panel | 1x Shelf | 1x Back Rail | 2x Metal Rail | 2x Frontals | 1x Base Panel | 1x Back Panel

5x Legs

5x Leg Base

2x Plinth Clips

4x Hinge Mounting Plates

4x Hinges

5x Door Buffers

28x15mm Screws

8x30mm Screws

18x Cover Caps

2x Shelf Pegs

10x Wooden Dowels

6x Cam Lock

6x Cam Dowels

2x L-Brackets

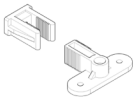

2x Dummy Fixing Clip Inc Screws (Dummy drawer only)

Drawer Parts

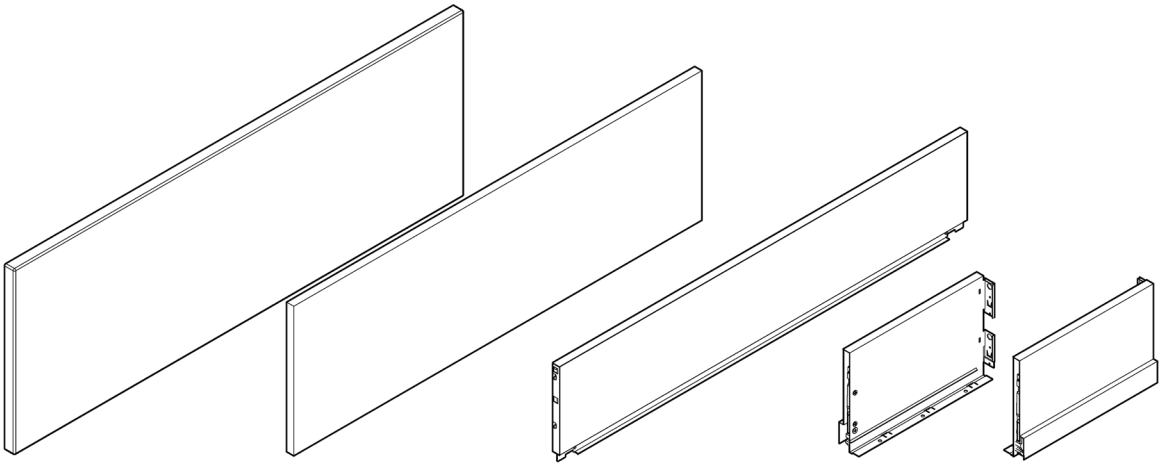

1x
Frontal

1x
Base Panel

1x
Metal Rail

1x
Left Drawer Side

1x
Right Drawer Side

16x15mm
Screws

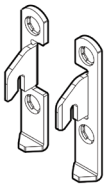

2x
Grass Drawer Front Fixing Deep

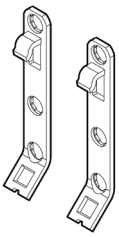

2x
Grass Drawer Front Fixing Standard

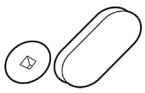

SIngle and Double Cover Caps

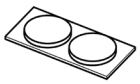

5x
Door Buffers

2 Drawer

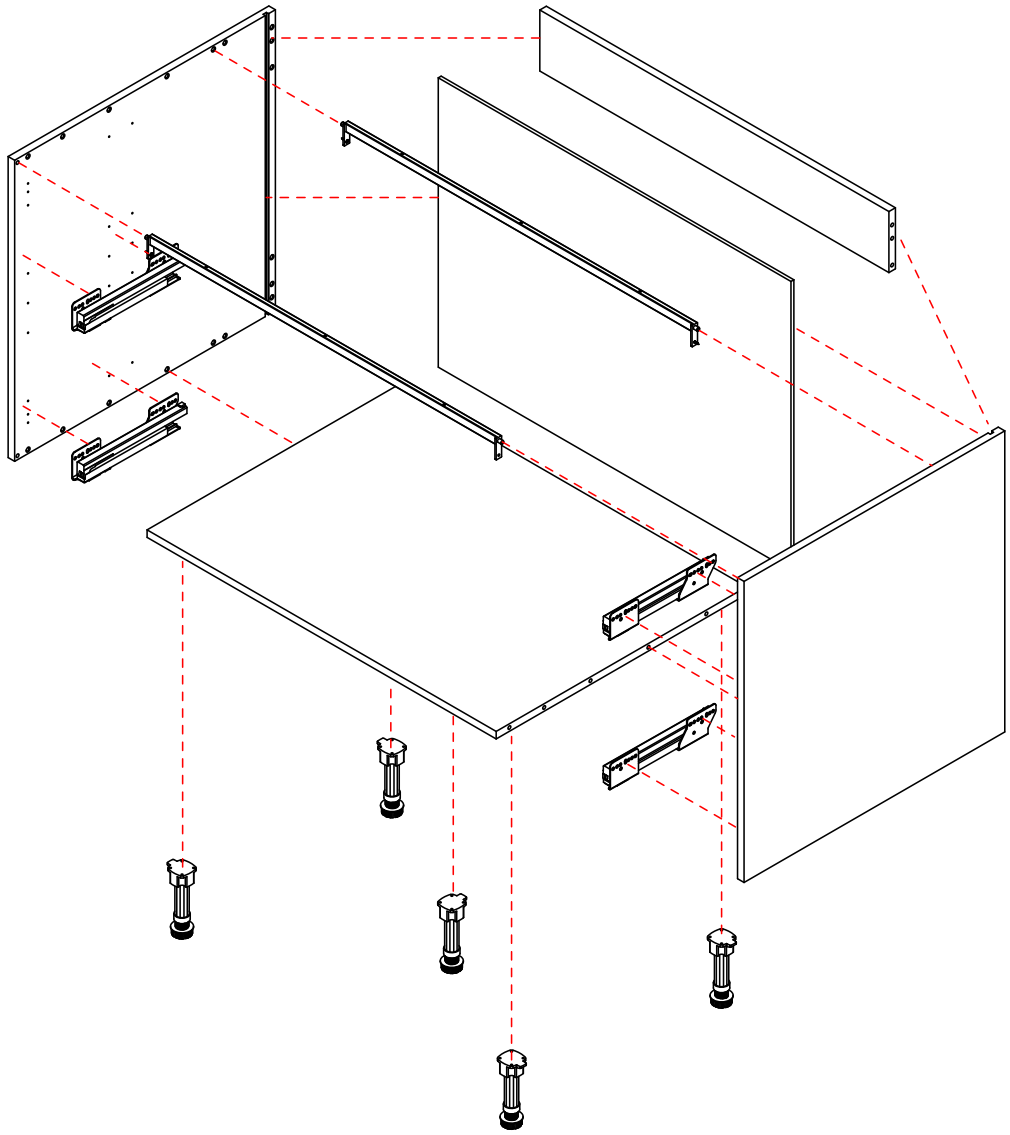

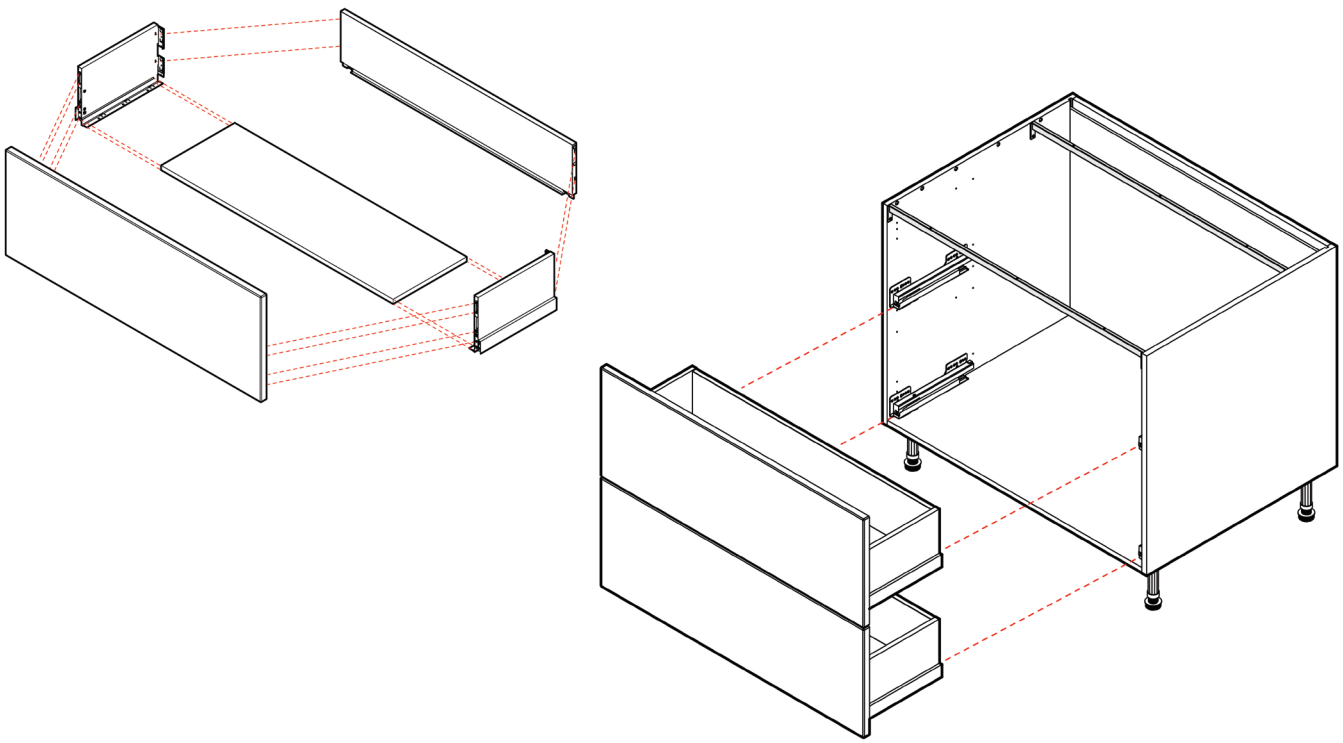

2 Drawer Inc Dummy Drawer

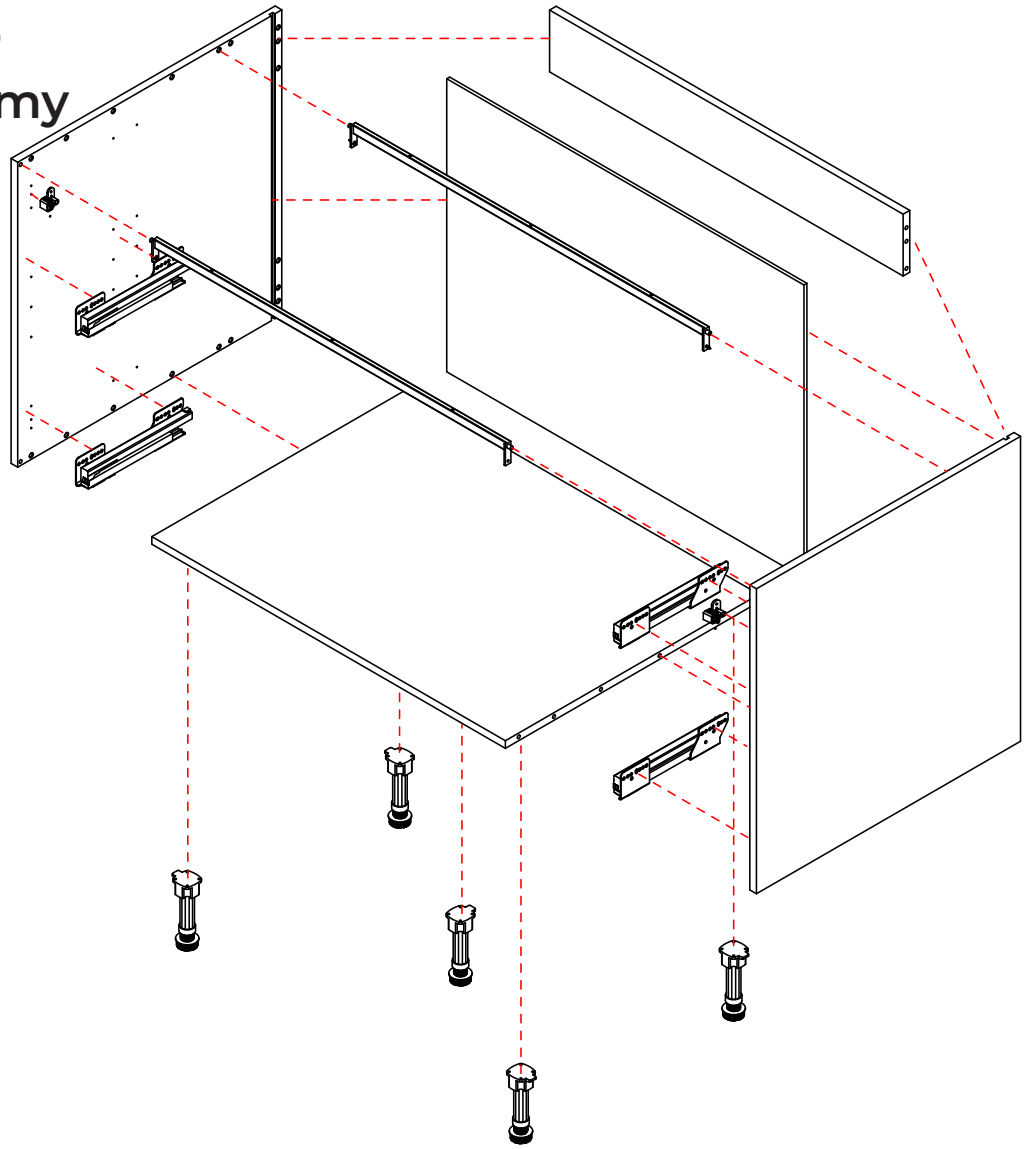

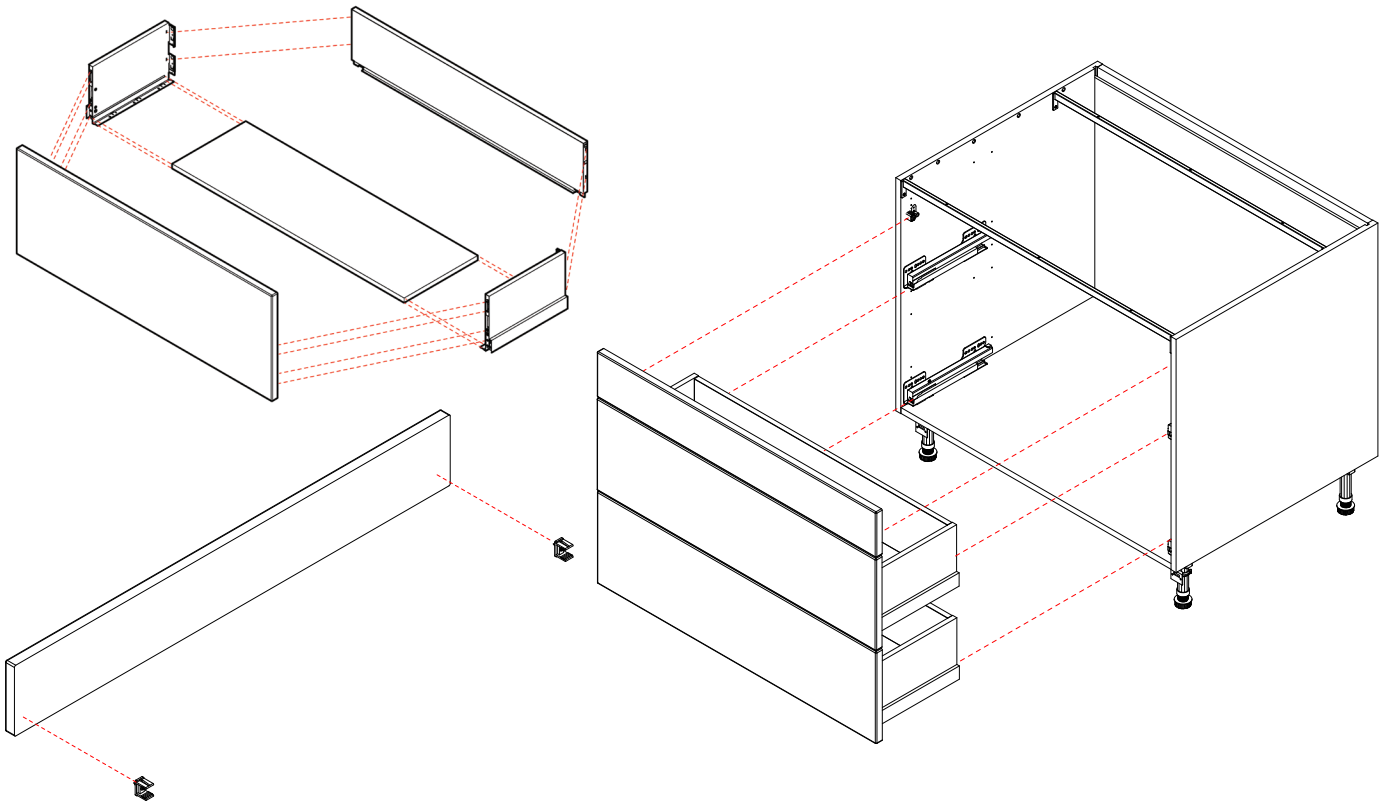

Remember to take care when unpacking. Please keep your workspace clean, clear and tidy when working. This will help keep all items safe from any damages. Any un-needed cardboard or plastic should be flattened down and placed in the bin.

Unpacking the parts and fittings

Remove all content from the packaging and ensure that you familiarise yourself with all unit parts and fittings.

All parts and fittings should be kept on a clean and, level surface, and the frontal and shelf should be placed in the door safe along their longest length.

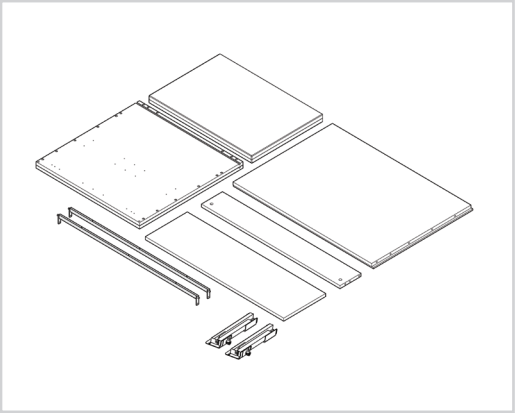

Locating the side panels

Locate the **2** side panels and place them on a soft, clean surface.

Arrange them next to each other with the holes facing upwards and the grooves facing each other. The hole patterns will be mirrored. See diagram.

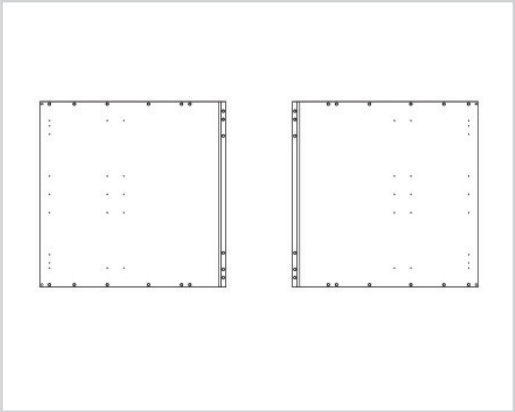

Tapping the wooden dowels into position

Place the **10x** wooden dowels into the holes highlighted in the diagram.

Using a mallet, gently tap the wooden dowels into the holes.

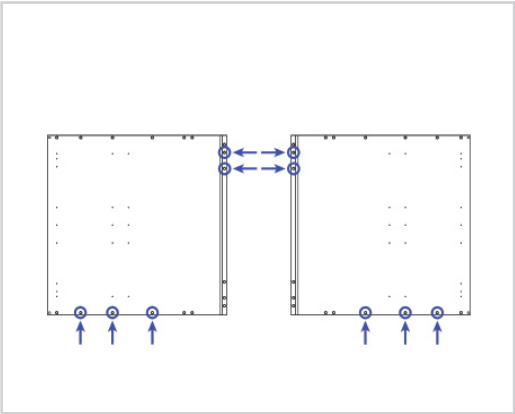

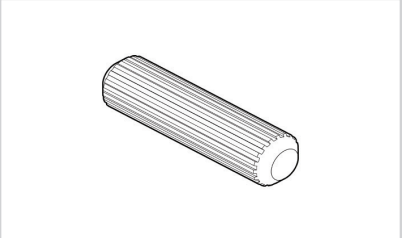

Positioning the cam dowels

Place the **6x** cam dowels in the holes shown, pressing them in by hand.

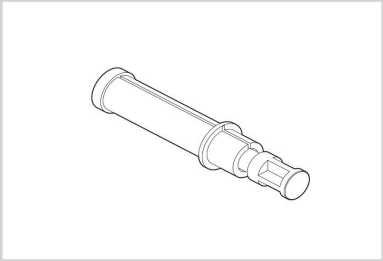

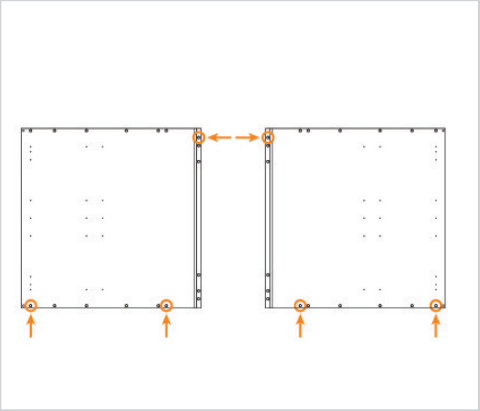

Attaching the drawer runners

Using a cordless screwdriver, secure the drawer runners in place with **2x16mm** screws in the holes, as shown in the diagram.

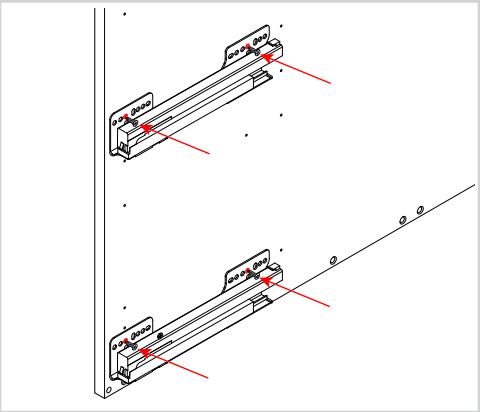

2 drawer -
The pilot holes for the lower drawer runners are positioned **74mm** from the base of the panel.

The pilot holes for the upper drawer runners are positioned **431mm** from the base of the panel.

The front screw should be **37mm** from the front edge of the panel.

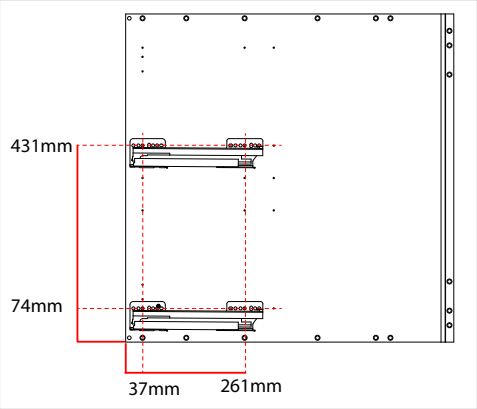

2 dummy inc dummy drawer -
The pilot holes for the lower drawer runners are positioned **74mm** from the base of the panel.

The pilot holes for the upper drawer runners are positioned **360mm** from the base of the panel.

The front screw should be **37mm** from the front edge of the panel.

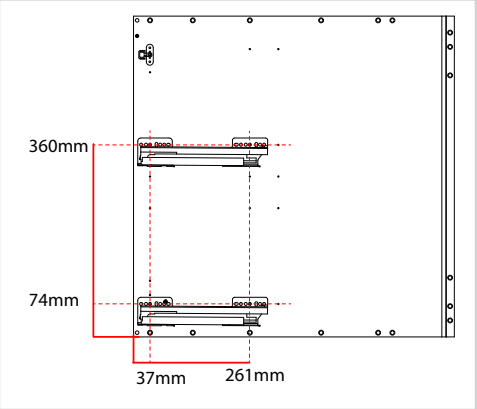

- Dummy drawer unit only - Attaching the dummy clips (part A)

Attach the dummy fixing clip components (A) to each of the two end panels using two **2x15mm** screws.

The bottom screw hole is to be positioned **84mm** from the top of the panel.

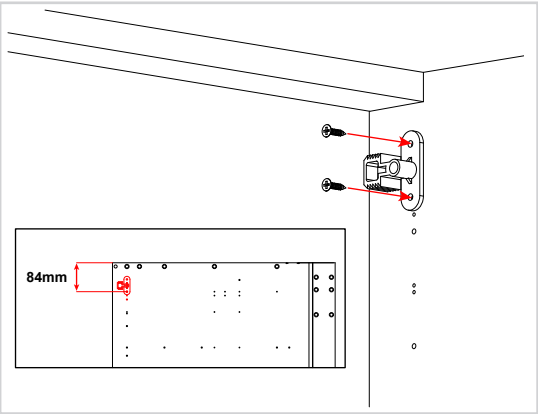

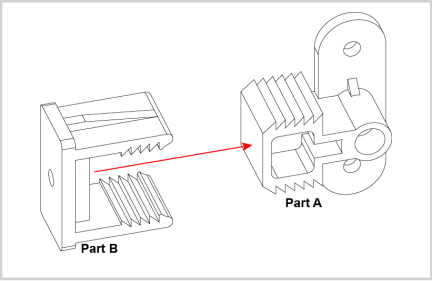

- Dummy drawer unit only - Attaching the clip to the frontal (part B)

Secure **2x** dummy fixing clip parts on the inside face of the dummy draw front, **26mm** from the edge and **64mm** from the bottom, spaced evenly on either side as shown, using **1x21mm** screw per part.

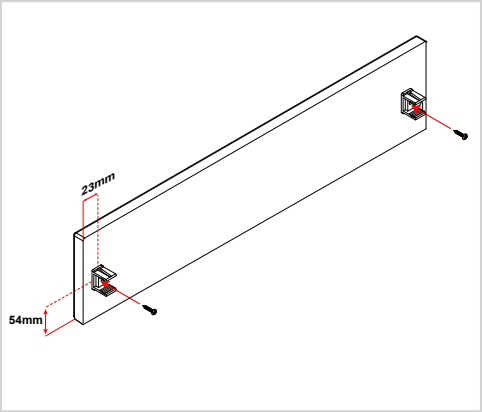

Inserting the metal rail

Insert the metal front rail into the hole shown in the diagram.

If you are fitting a hob with a separate downdraft extractor, fit the additional metal rail near the back of the unit in the hole shown on the diagram.

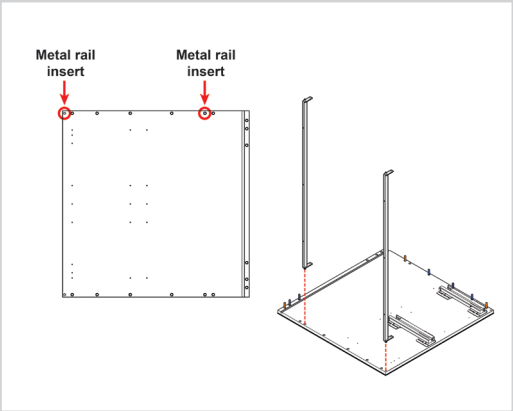

Inserting the cam locks

Insert all the **6x** cam locks into the cam holes on the base panel and back rail, as shown in the diagram.

Ensure the arrow on each cam lock points towards the nearest edge of the panel.

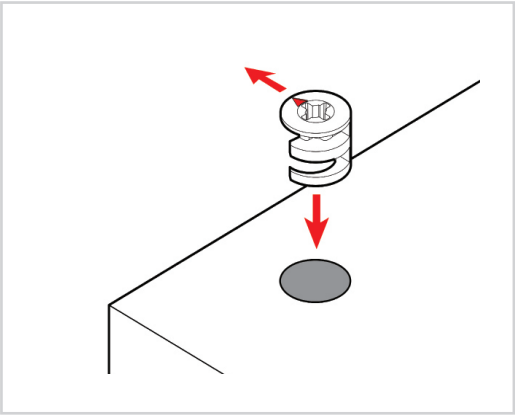

Attaching the base panel

Fit the base panel onto the left side panel, ensuring the holes for the legs are on the outside.

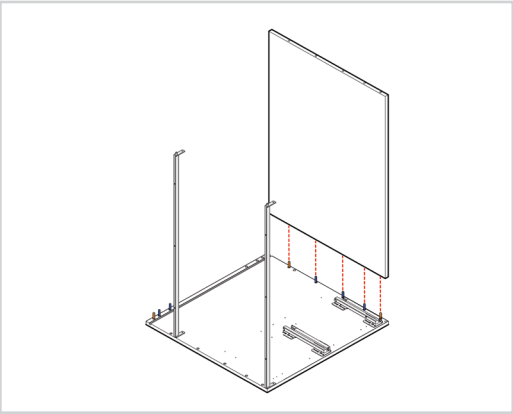

Attaching the back rail

Fit the top rail onto the left side panel.

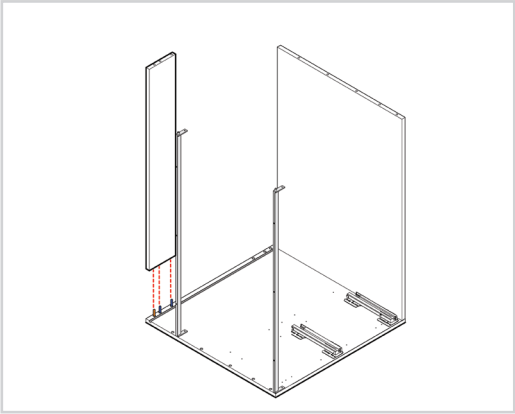

Placing the side panel into position

Place the right side panel onto the unit, taking care to align the cam and dowel holes with the metal rail.

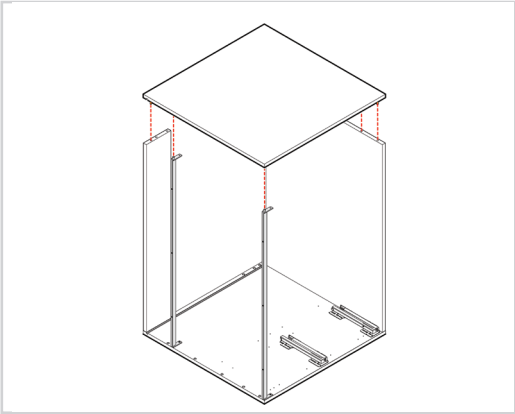

Sliding the back panel into position

At the rear of the unit, slide the back panel into the side panel grooves.

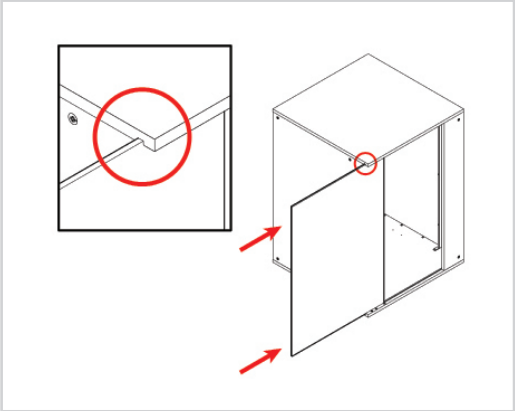

Ensure the white side of the back panel is visible from the inside of the unit.

Tightening the cam locks

All the cam locks should be manually tightened using a flathead screwdriver; the cam locks will tighten around the cam dowels.

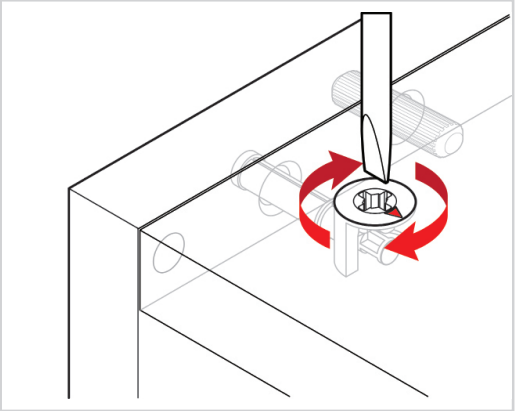

Securing the metal rails

Using a drill, secure the metal rails in place with **2x15mm** screws.

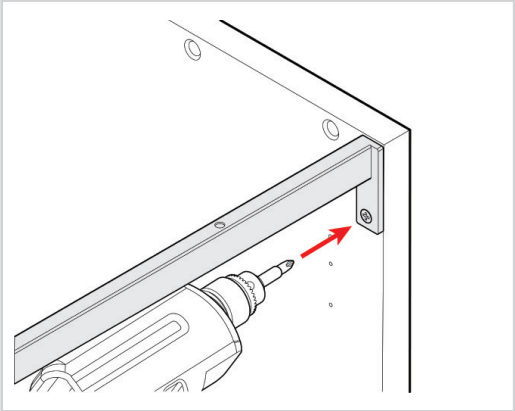

Marking the unit

Place a strip of masking tape on the bottom of the back panel.

Mark onto the masking tape at four locations, **9mm** from the bottom edge, ensuring the markings are spaced equally.

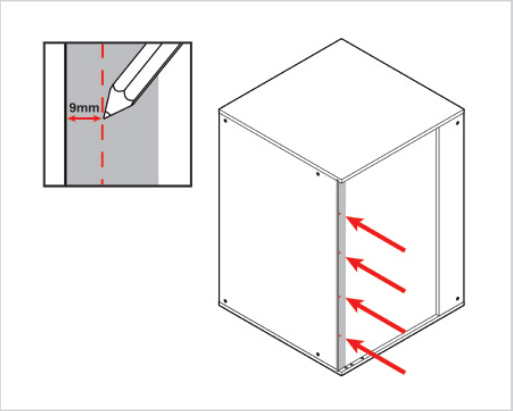

Fixing the back panel

At the **4x** marked locations, pilot drill **4x** holes.

Use **4x30mm** screws to secure the back panel to the unit.

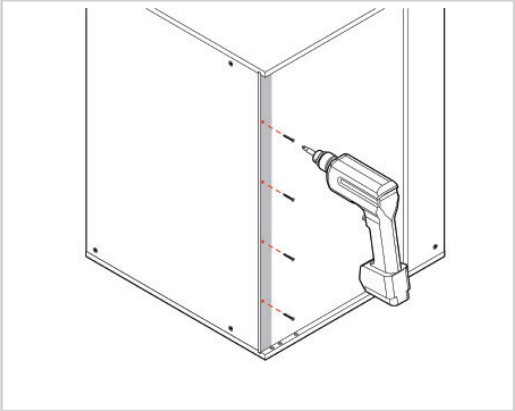

Positioning the leg bases

Mark a straight line on the underside of the unit, **40mm** from the front edge.

Position two front leg bases using this line, as shown. Ensure that the centre points of the leg bases are approximately **55mm** from the sides of the unit. The leg bases should be rotated so that the flanges will support the side panels of the unit.

Mark a straight line on the underside of the unit, **40mm** from the rear edge.

Position two rear leg bases using this line, as shown. Ensure that the centre points of the leg bases are approximately **55mm** from the sides of the unit. The leg bases should be rotated so that the flanges will support the side panels of the unit.

The final leg base is to be positioned in the centre of the unit.

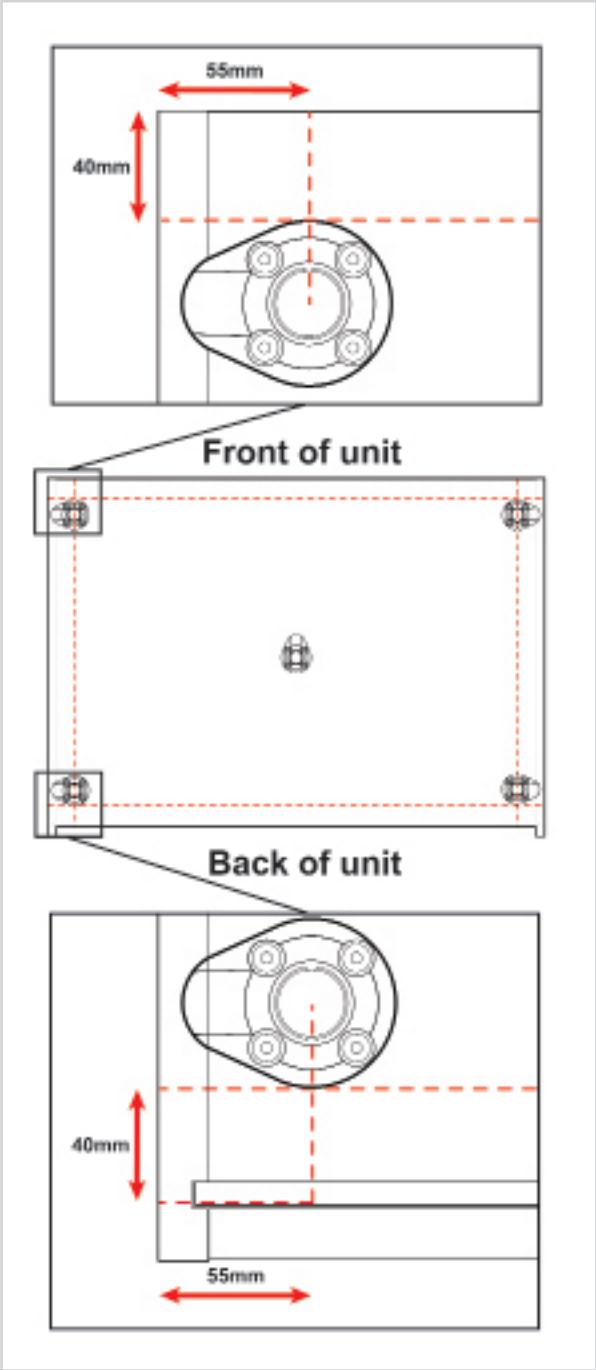

Fixing the leg bases

Secure each of the leg bases into place with **4x15mm** screws per bracket.

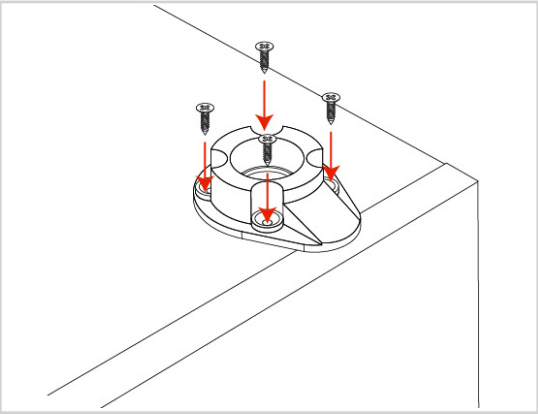

Inserting the legs

Push each leg firmly down into the leg bracket. Adjusting each leg to **155mm**.

Adjust the legs to the correct height by turning clockwise or anti-clockwise.

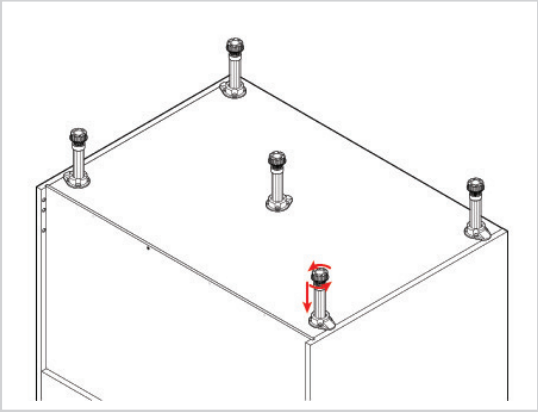

Lifting the unit into place

When lifting the unit into place, do not tilt, as this can damage the legs.

Place the unit in position, ensuring it aligns with the floor markings made during the room preparation stage.

Use a spirit level to ensure the unit is level from front to back, left to right, and diagonally. Adjust the legs if required.

The leg height can be adjusted by turning the foot of the leg clockwise or anti-clockwise.

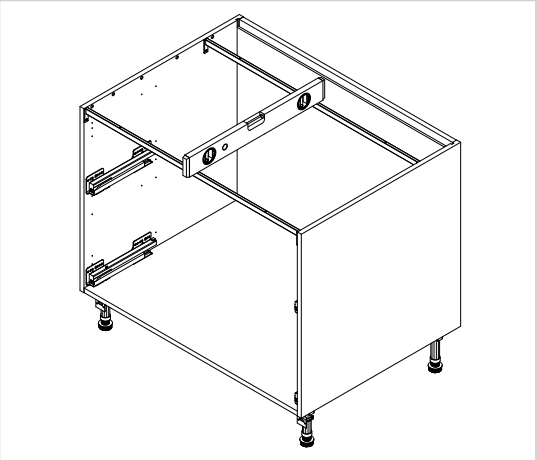

Securing to adjacent units

Clamp together the two units, checking that the front edges are level and flush.

Using the screws provided, **1x30mm** screw should be fixed into each corner of the unit side.

The screws can be concealed by placing them behind the shelf or behind the hinge plates. The cover caps can be used to hide any visible screw heads that remain.

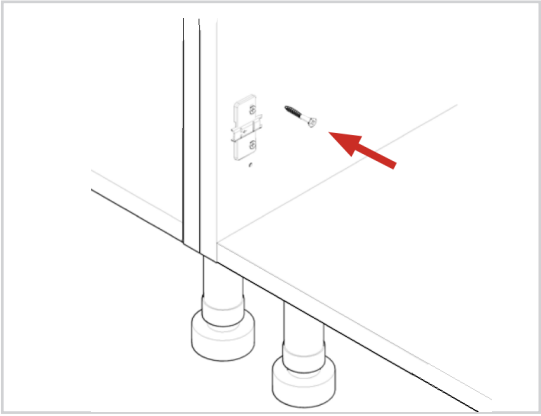

Assembling the drawers (X2)

Unpack the parts and fittings

Unpack all of the parts from the container and lay them out on a soft, clean surface to protect them from scratches. Check them off against your parts list to familiarise yourself with each part.

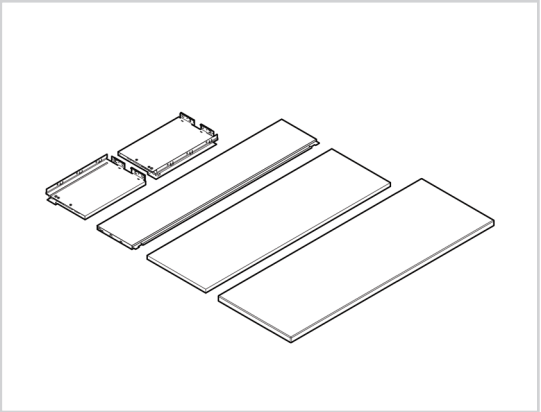

Attaching the first drawer side

Insert the notches on the back panel into the holes at the back of the drawer side.

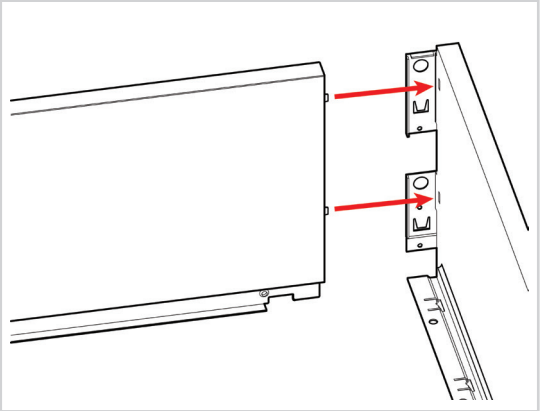

Positioning the drawer base

Seat the edge of the drawer base tight into the corner of the casing, as shown.

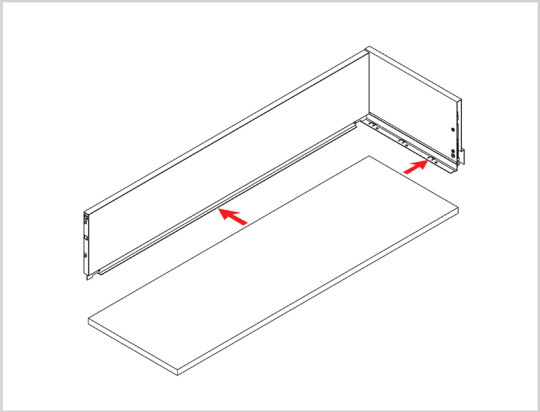

Securing the drawer back

Push the drawer plugs on the back of the drawer side into the drawer back to lock the two parts together.

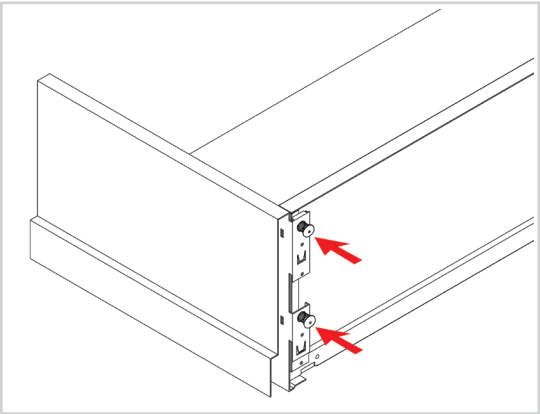

Attaching the second drawer side

Insert the notches on the back panel into the holes at the back of the second drawer side, taking care to make sure the base panel slots into the side groove.

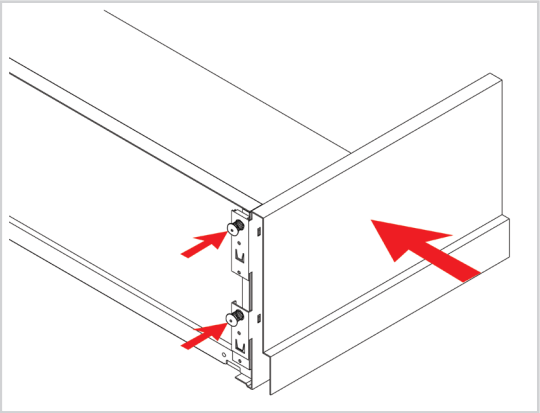

Securing the drawer base

Secure the drawer base to the drawer side using **3x15mm** screws per side.

Secure the base to the back panel using the **2x15mm** screws in the holes provided.

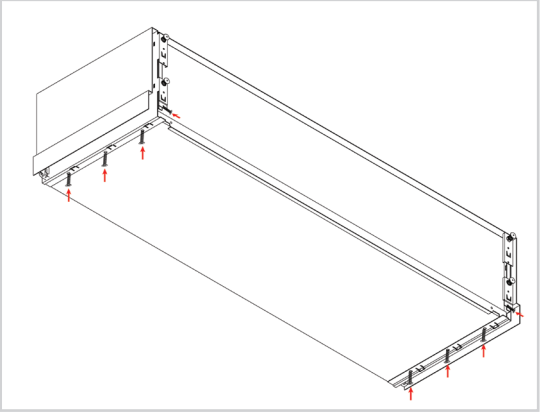

Attaching the fittings to the drawer frontal

Secure drawer front fixings using **5x15mm** screws, as shown.

Make sure the groove of the fixing is positioned facing the outer edge of the frontal.

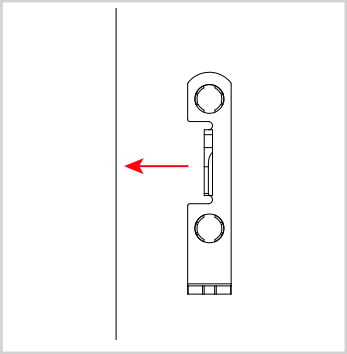

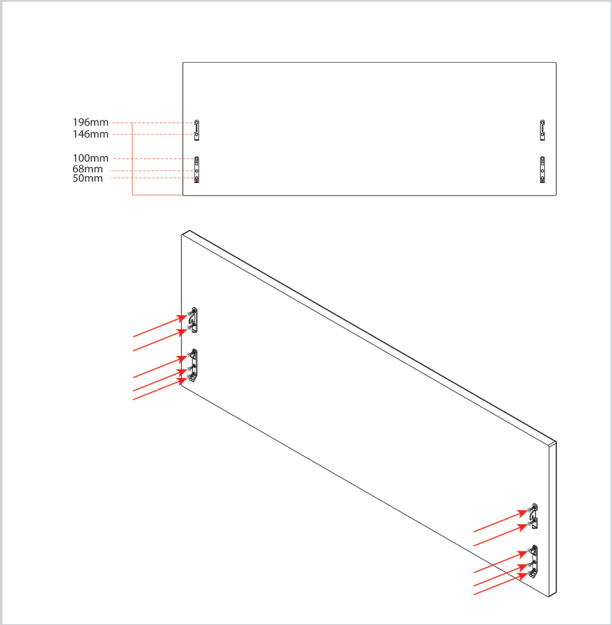

Attaching the frontal

Attach the draw front by pushing the frontal onto the sides, aligning the mechanism with the fixings.

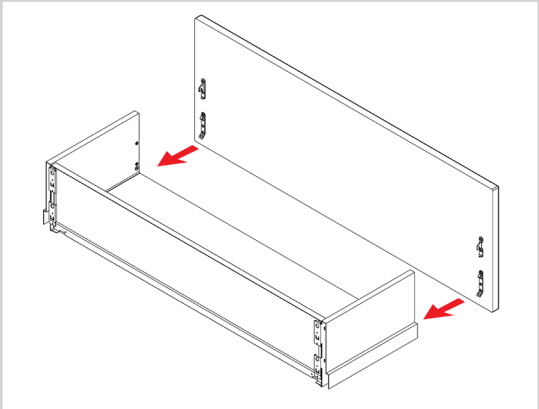

Placing the drawer into the unit

Slot the drawer onto the drawer runners, pushing it all the way to the back of the unit until it clicks into position.

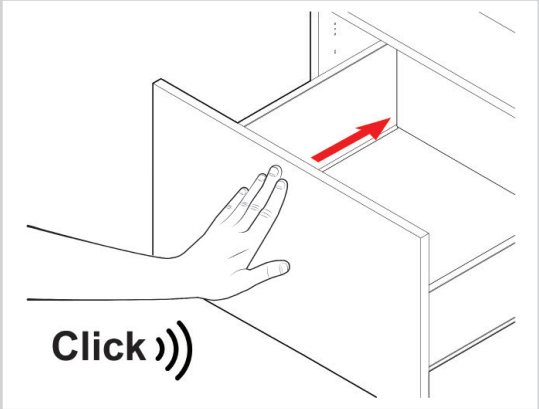

Adjusting the frontal height

To adjust the height of the frontal, use a screwdriver as required at **points 1** and **2**.

Step 1 - Loosen both of the screws at **point 1.**

Step 2 - Turn the screw at **point 2** to adjust the frontal's height.

Step 3 - Once in the desired position, re-tighten the screws at **point 1.**

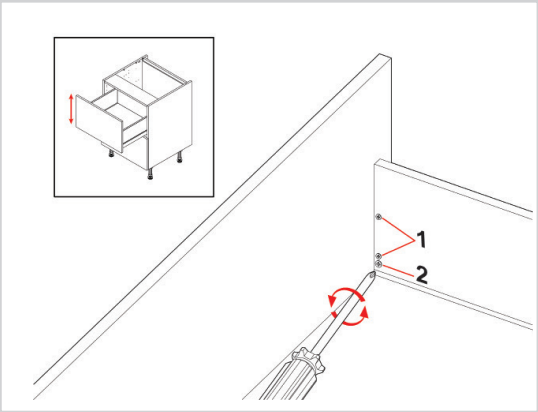

Adjusting the frontal horizontally

Use the fixing clips, which are found under the drawer's front, to adjust the drawers.

Step 1 - Press the fixing clips half way to meet the runners on the underside of the drawer.

Step 2 - Slide the drawer to the left or right to adjust.

Step 3 - To lock the frontal in place, release the fastening clips on both sides of the drawer.

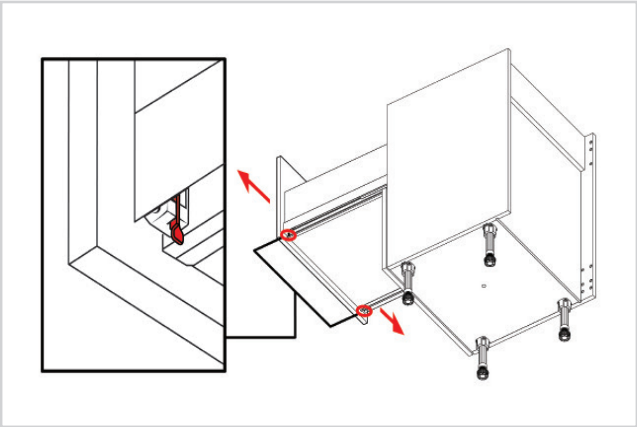

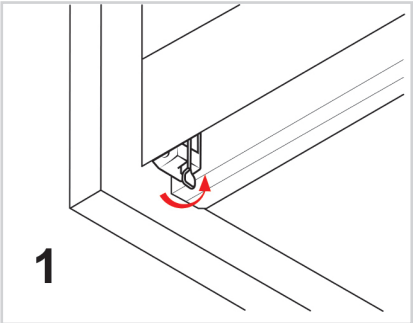

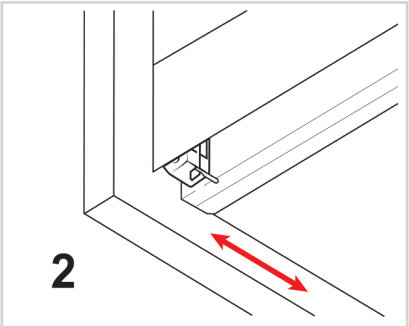

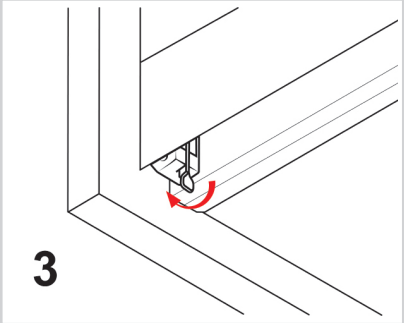

Adding the drawer buffers

Add **1x** door buffer to each side of each drawer along the carcase edge, as shown in the diagram.

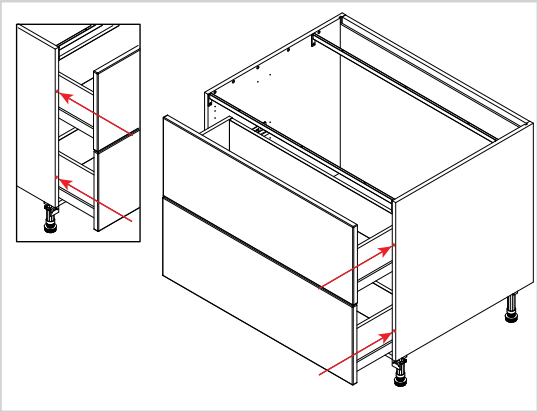

- Dummy drawer unit only -
Fixing the dummy frontal to the unit

Position the panel and push it into place. Make sure the frontal aligns with the unit's frontal next to it.

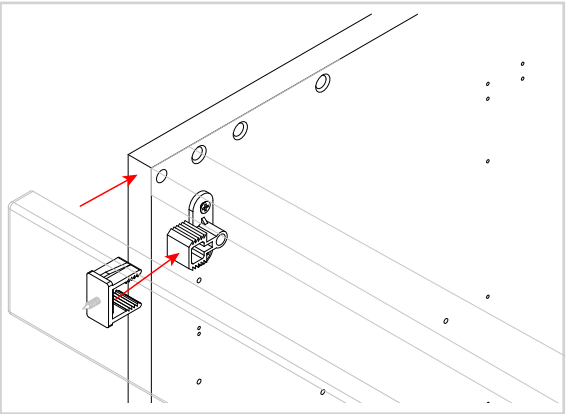

Cleaning the unit

Finally, the unit should be thoroughly cleaned to remove any debris that may have accumulated during the installation.

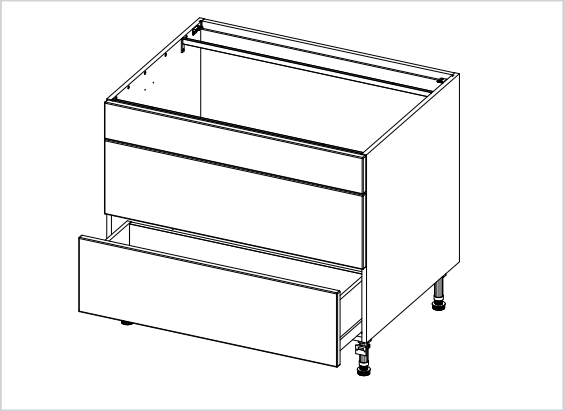

Store the plinth clips and the remaining 15mm screws.
These will be used later when attaching the plinth.

Store the L-brackets.
These will be used later when installing the worktop (laminate or timber).