INFINITY LINEA

Base Unit

700 - 1000, Base (Drawer, Solid Top, 4 Legs)- Fitting Guide

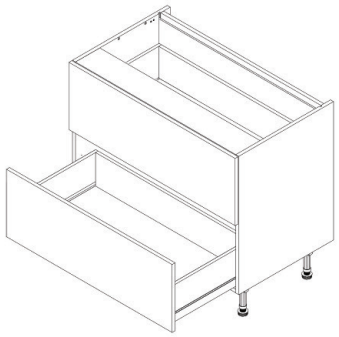

2 drawers

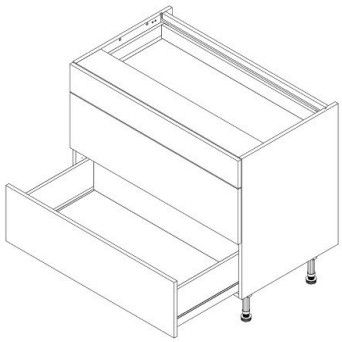

3 drawers

Units Parts

32x 15mm screws

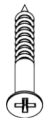

6x 30mm screws

18x Cover Caps

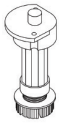

5x Legs

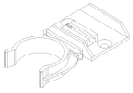

2x Plinth Clips

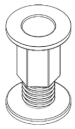

2x Space Plug

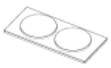

5x Door Buffer

2x L-Brackets

Drawer Covers Cap (2 Per Draw)

Tools Required

Drill

Mallet

Screwdriver

Clamp

Spirit Level

Tape Measure

Remember to take care when unpacking. Please keep your workspace clean, clear and tidy when working. This will help keep all items safe from any damages. Any un-needed cardboard or plastic should be flattened down and placed in the bin.

Removing the drawer, fixtures and fittings

Remove all fixtures and fittings from the drawer and keep on a clean and level surface and grouped by product.

Before installing the unit, remove all drawers. This is done by pulling the drawer all the way out, and then pulling the front of the drawer upwards.

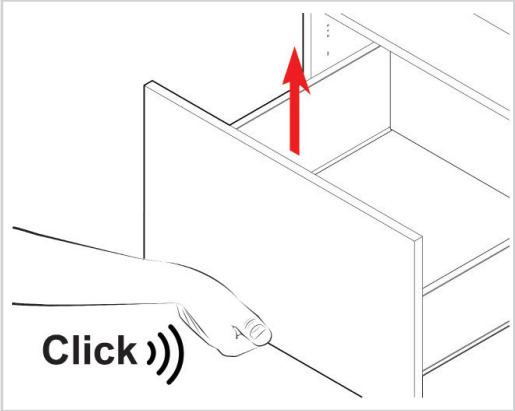

Place the drawers on top of a piece of leftover cardboard to protect them from damage.

Positioning the leg brackets

Locate the leg brackets and position, as shown in the diagram. Ensure the leg brackets are rotated so the flange covers the outer edge, as this provides support for the edge of the unit.

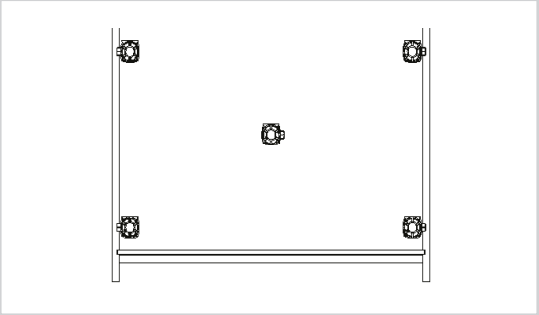

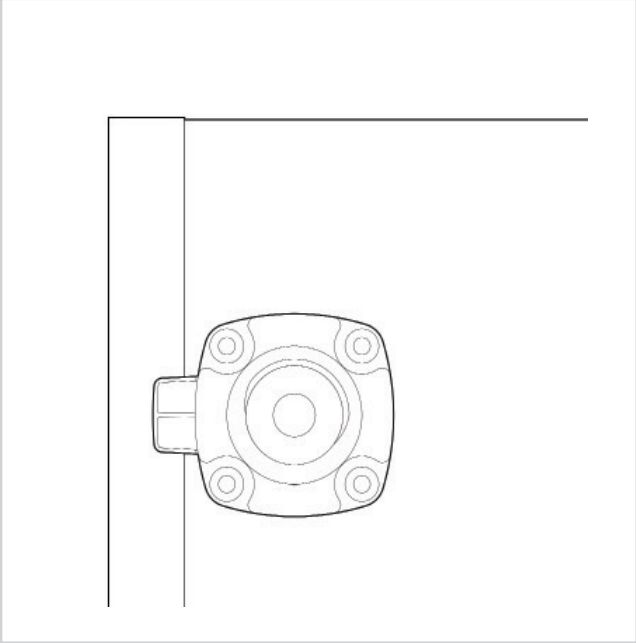

Fixing the leg bases

Secure each of the leg brakets into place with **4x15mm** screws per bracket.

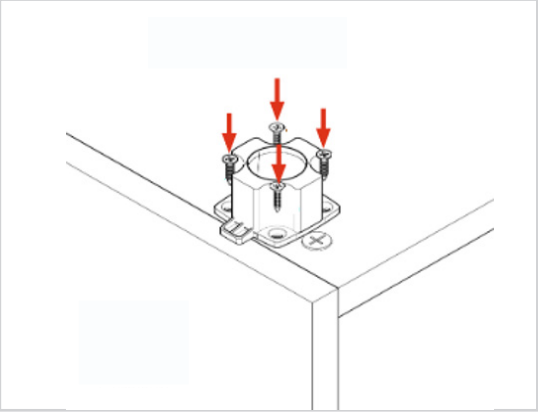

Inserting the legs

Push each leg firmly down into the leg bracket. Adjusting each leg to **165mm**.

Adjust the legs to the correct height by turning clockwise or anti-clockwise.

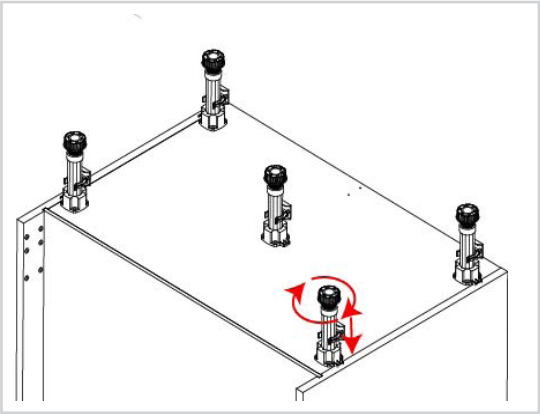

Notching out the end panels (when required)

In order to allow for any horizontal pipework running behind the unit, some units will require the back of unit's side to be notched out.

Create a notch for the horizontal pipes at the back of the end panels using a jigsaw.

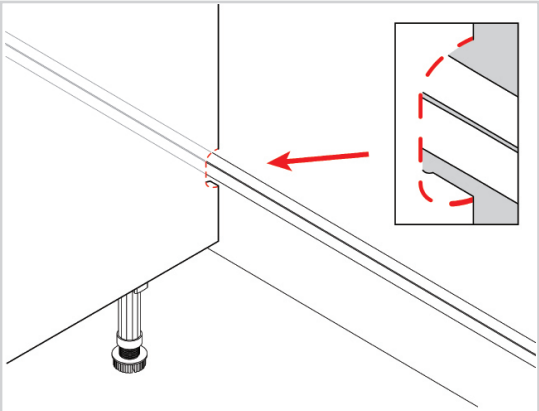

Lifting the unit into place

When lifting the unit into place do not tilt as this can damage the legs.

Place the unit against the wall and align it with the wall markings that will have been drawn during the room preparation stage.

Use a spirit level to ensure the unit is level from front to back, left to right, and diagonally. Adjust the legs if required.

The leg height can be adjusted by turning the foot of the leg clockwise or anti-clockwise.

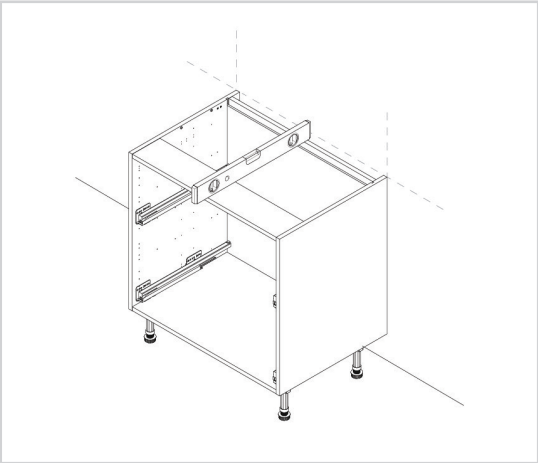

No screws or wall plugs are provided for attaching the unit to the wall.
This is due to variations in wall construction.

Before drilling into the wall you MUST check for any hidden services or pipework within the walls.

Drilling the pilot holes

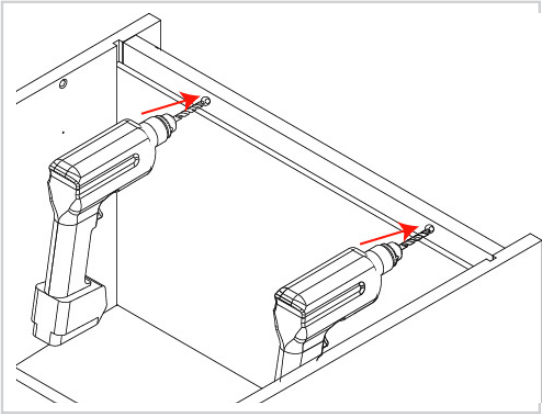

Drill a pilot hole through the back panel making sure to lightly mark the wall to indicate where the wall fixing should be placed. The hole should be located as per the diagram, **1/3** in from each side and close to the top of the unit.

For guidance on the appropriate wall fixing for each wall type, please consult the "**Room Preparation Guide**."

Once complete lift and move the unit away from the wall.

Using the pilot hole, drill a hole to suit the fixing. Place the wall fixing within the hole.

Lift and reposition the unit, ensuring it is level and in line with the wall markings.

Inserting the space plugs

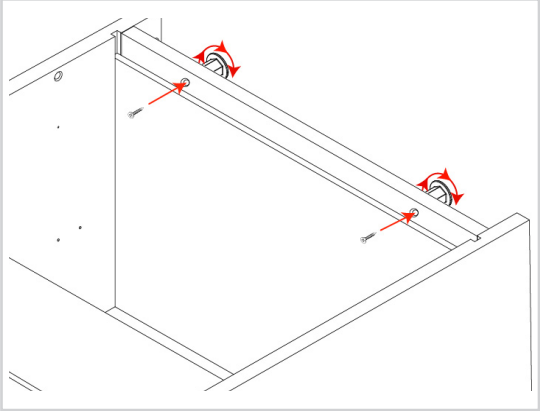

Position the space plugs between the wall and the back of the unit, where the holes are located.

Unwind until the space plugs touches both the back panel of the unit and the wall.

Insert the screws into the drilled holes and tighten to the wall.

Before attaching the units together, ensure that the linea profie cutout of both units align.

Securing to adjacent units

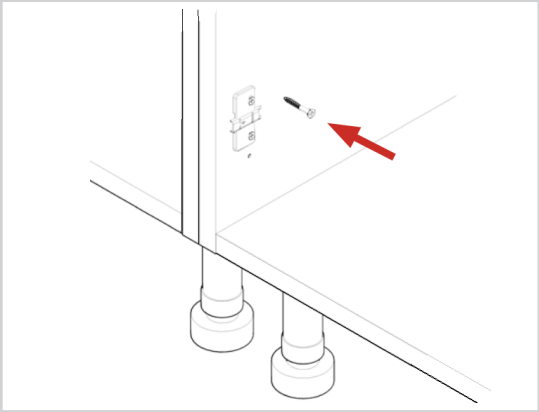

Clamp together the two units, checking the front edges are level and flush.

Using the screws provided, **1x30mm** screw should be fixed into each corner of the carcase side.

The screws can be concealed by placing them behind the hinge plates. The cover caps can be used to hide any visible screw heads that remain.

Inserting the drawers

Slide the drawer onto the runners, make sure the runner mechanism and the drawer sides' groove line up.

Push the drawer back into the unit after it has been positioned on the runners; you should hear a click.

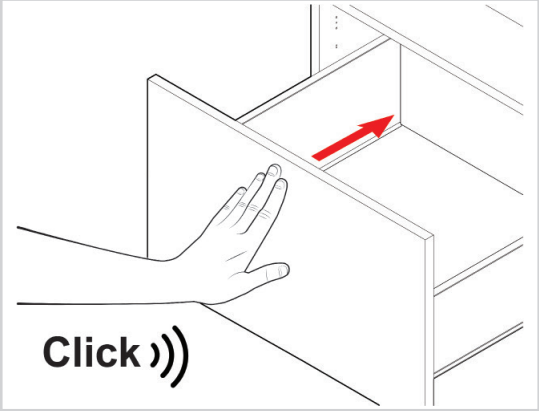

Adding the drawer buffers

Add **1x** door buffer to each side of each drawer along the carcase edge, as show in the diagram.

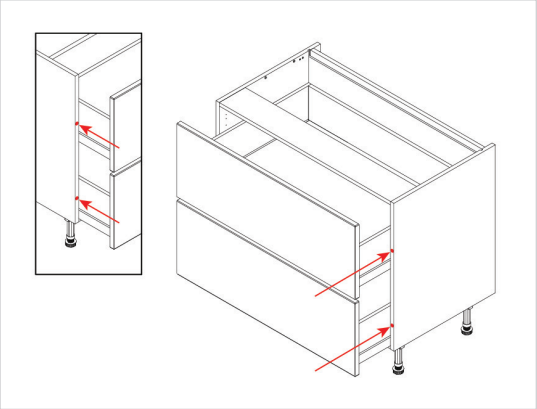

Removing the drawer cover caps

To remove the drawer cover cap found at the side of the drawer, use a flathead screwdriver in the groove of the cover cap to take the cap off.

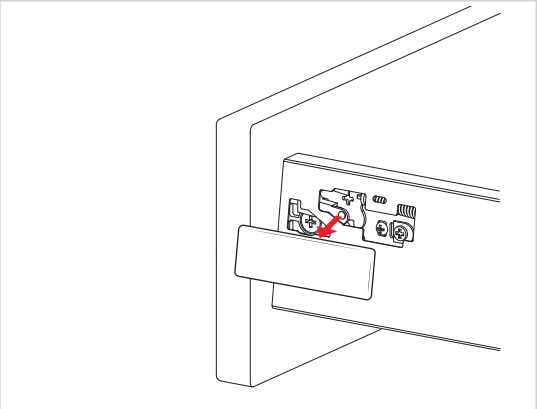

Adjusting the hinges and cover caps

Adjust hinges to suit. As shown in the image.

Point 1 - Will adjust the frontal left and right.
Point 2a - Will adjust the frontal up and down.
Point 2b - Will adjust the frontal tighten once in position.
Point 3 - Will adjust the frontal releasing fixing clip. Screw while applying downward. pressure to release.

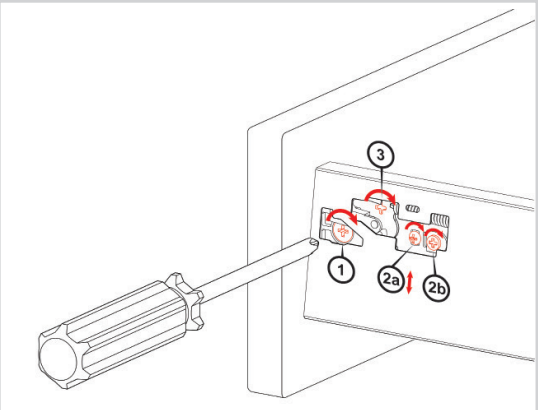

Fitting the drawer cover caps

Fit the drawer cover caps over the drawer side adjustment.

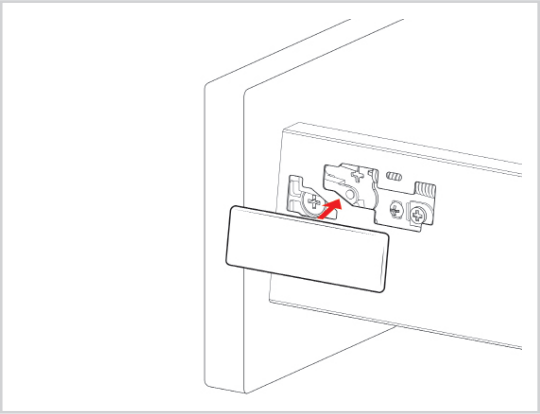

Cleaning the unit

Finally, the unit should be thoroughly cleaned to remove any debris that may have accumulated during the installation.

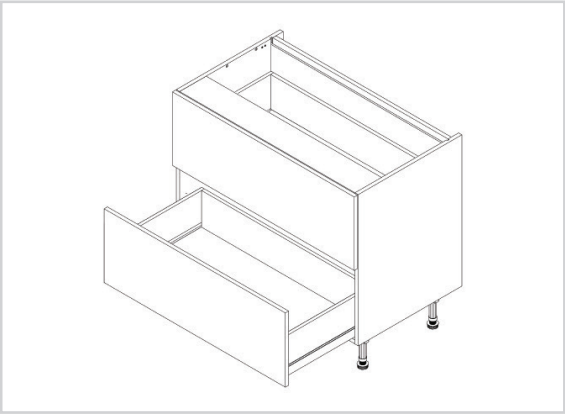

Store the plinth clips and the remaining 15mm screws.
These will be used later when attaching the plinth.

Store the L-brackets.
These will be used later when installing the worktop (laminate or timber).