INFINITY PLUS INFRAME

Profile - Fitting Guide

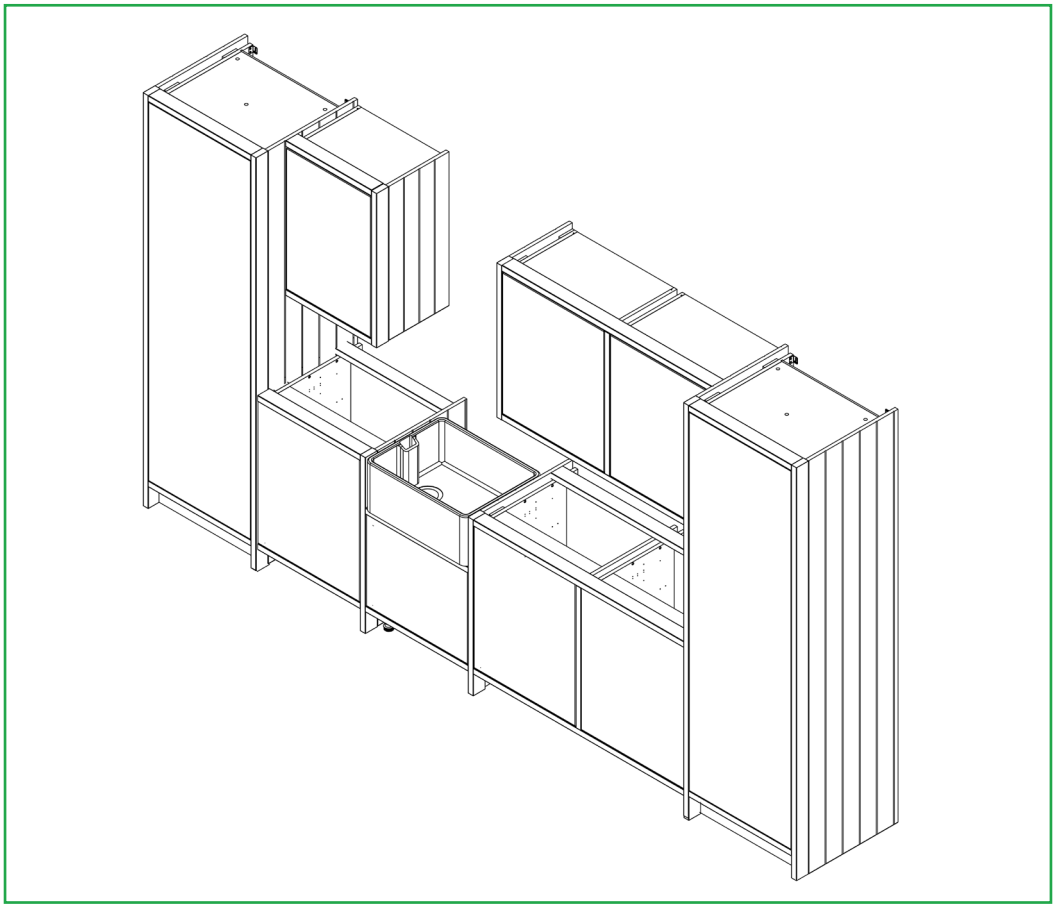

Page 2-11 Base Unit Profile

Page 12-15 Belfast Unit Profile

Page 16-20 Mid-Run Appliance Profile (Excluding dishwashers)

Page 21-28 Mid-Run Dishwasher Profile

Page 29-37 End-Run Dishwasher Profile

Page 38-45 Tower Unit Profile

Page 46-52 Wall Unit Profile

INFINITY PLUS INFRAME

Base Unit

Profile Fitting Guide

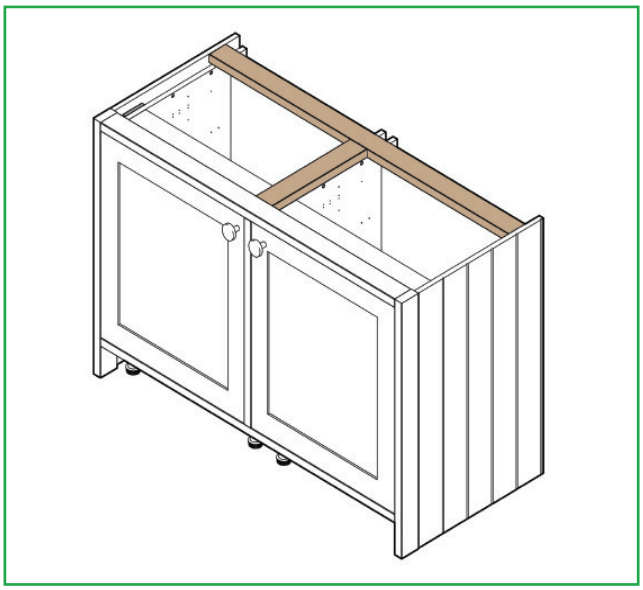

Parts Required

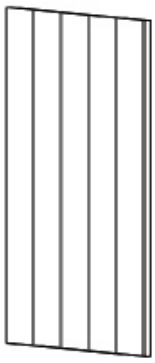

Decor Panel

Profile

Back Profile

Packer

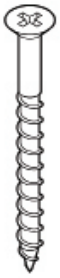

40mm Screws

20mm Screws

Cover Caps

Tools Required

Circular Saw

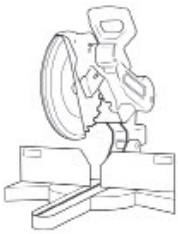

Chop Saw

Spirit Level

Drill

Screwdriver

Clamp

Sealant

Pencil

Masking Tape

Tape Measure

The base units should already be built. If not, please refer to the fitting guide for your units before starting this guide.

Remember to take care when unpacking. Please keep your workspace clean, clear, and tidy when working. This will help keep all items safe from damage. Any unneeded cardboard or plastic should be flattened down and placed in the bin.

Removing the frontal

Before installing the unit, remove the frontal by pulling the release catch.

Place the frontal in the door safe along its longest length.

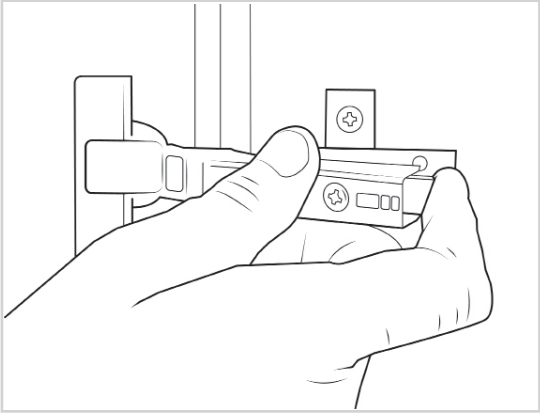

Adjusting the leg height

Make sure the legs are adjusted to **140mm** high and the unit is level.

If necessary, adjust the legs by turning them clockwise or anti-clockwise.

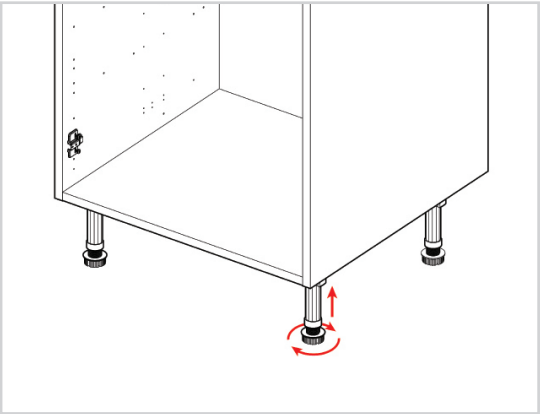

An off-cut piece of profile can be placed on top of the unit to get the additional 30mm needed in the next step.

Measuring the profiles

End profile:
The end profile is measured from the floor to the top of the unit **+ 30mm,** to sit above the unit.

Mid-profile:
The mid-profile is the same height as the unit. Measure from the bottom of the unit to the top.

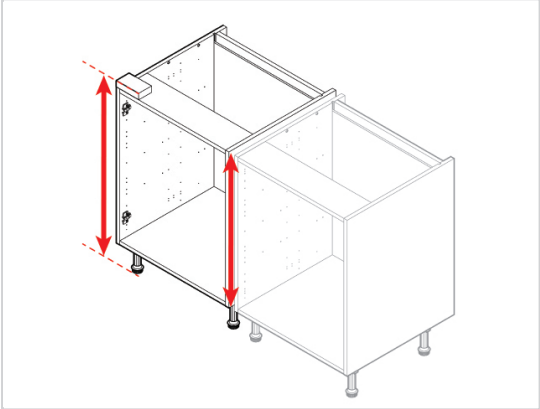

Cutting the profiles

From the measurements gained, the required profiles can now be cut to size.

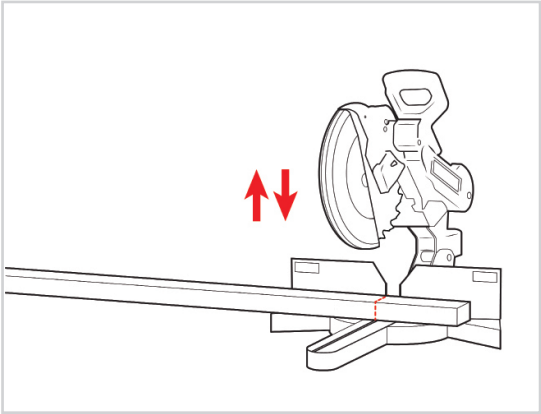

Screws should be placed in front of the hinge plate where possible. This will help to conceal the screw heads.

Securing the end profile

Position the end profile against the unit and clamp in place, ensuring the profile is set forward by the frontal thickness **+ 2 mm.**

Then drill and countersink **2** holes inside the unit, and secure the profile using **2x40mm** countersunk screws.

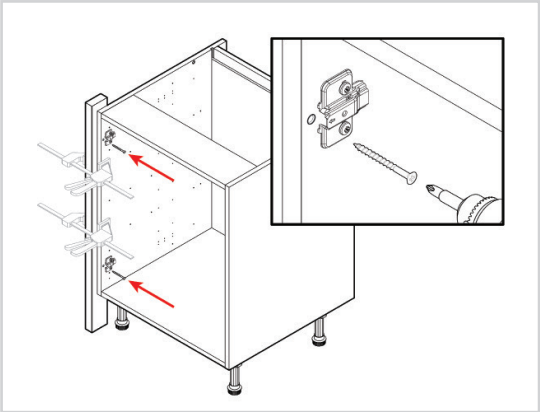

Place the cut side of the end profile to the top of the cabinet.

Preparing the packers

Drill and countersink a hole at each end of both packer pieces.

The holes should be placed **50mm** from the packer ends, as shown.

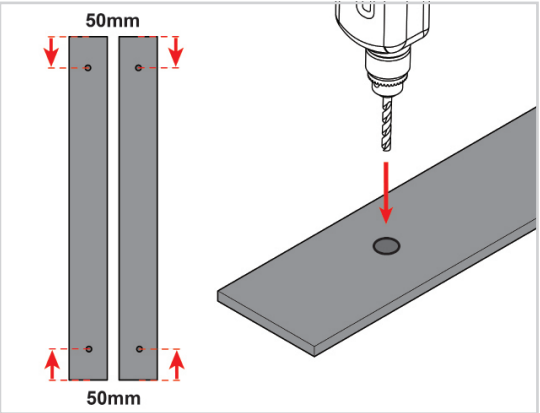

Securing the packers

Secure both packers to the unit using **2x20mm** screws per packer.

Make sure the screws sit flush with the packer.

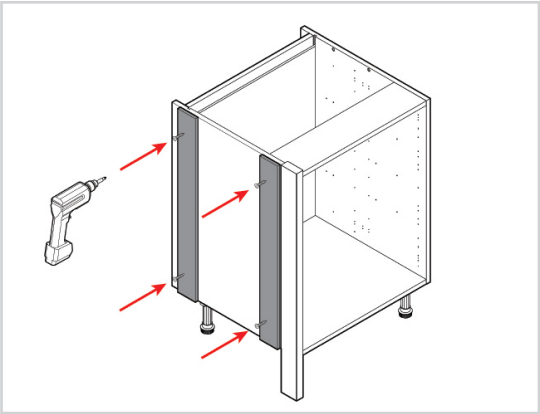

An off-cut piece of profile can be placed on top of the unit to get the additional 30mm needed in the next step.

Measuring for the decor panel

For the decor height, measure the height of the unit **+ 30mm**.

For the width, measure the distance from the wall to the back edge of the profile.

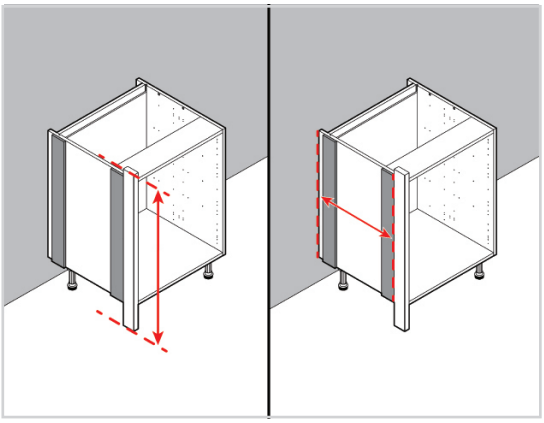

Cutting the decor panel to size

Mark the measurements onto the decor panel using masking tape and a pencil, then use a circular saw to cut the decor panel to size.

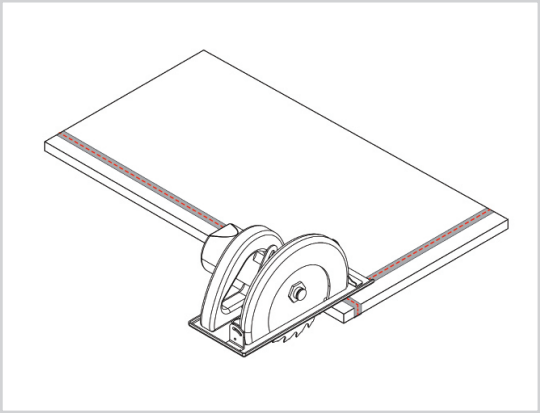

Securing the decor

Clamp the decor against the unit with the cut edges facing upwards and towards the wall.

Use **4x40mm** countersunk screws on the inside of the unit and through the packers to secure the decor as shown.

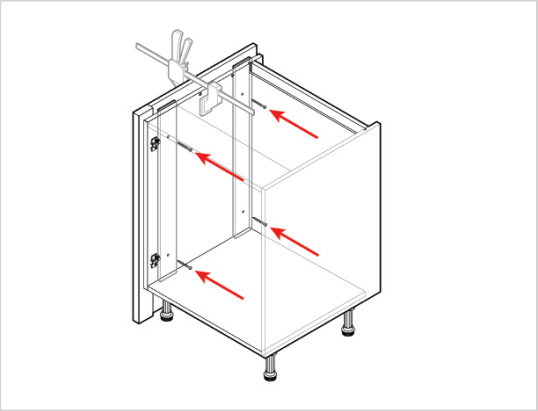

If an additional unit is being added, a mid-profile is required.

Attaching the mid-profile (if required)

Position and clamp the profile, ensuring it sits flush with the top and bottom of the unit and is set forward from the units by the **frontal thickness +2mm.**

Once clamped, drill and countersink **2** holes on the inside of the unit, and secure the profile using **2x40mm** countersunk screws.

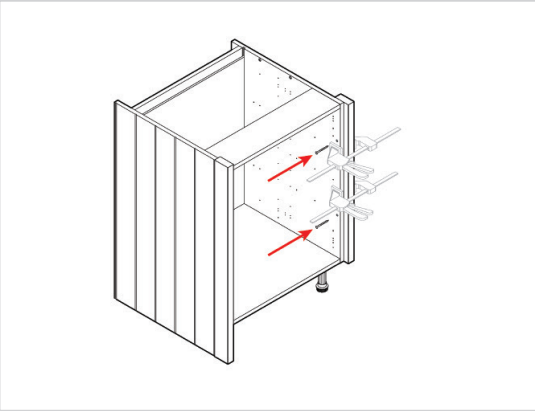

If an additional unit is being added, a mid-profile is required.

Attaching the mid-profile (if required)

Position and clamp the profile, ensuring it sits flush with the top and bottom of the unit and is set forward from the units by the **frontal thickness +2mm.**

Once clamped, drill and countersink **2** holes on the inside of the unit, and secure the profile using **2x40mm** countersunk screws.

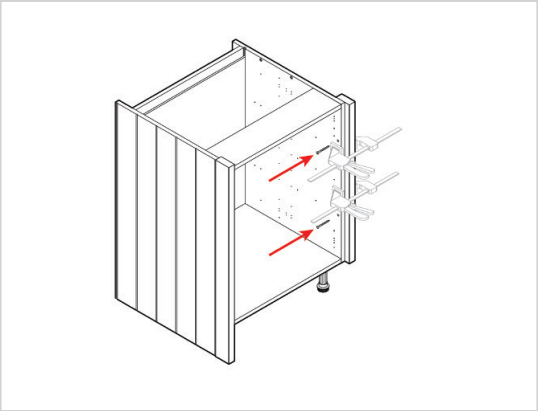

Fixing the offcut between units (If required)

From inside the unit towards the back drill and countersink a hole through the side panel.

Using a **40mm** screw fix a piece of wood to the opposite side of this panel. Make sure the offcut used is the same width as the mid-profile.

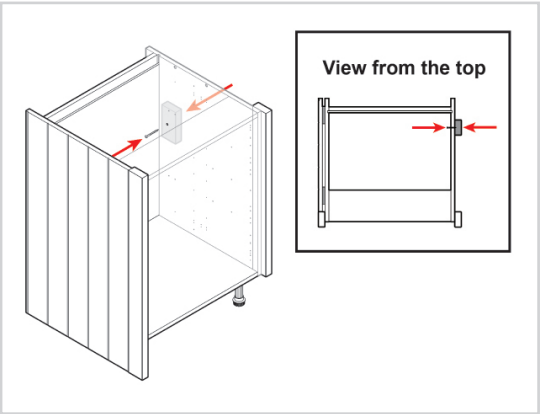

Aligning an additional unit (if required)

Align the additional unit against the mid profile and unit.

Use a spirit level to make sure the units are level adjusting the units as required, and clamp the units together.

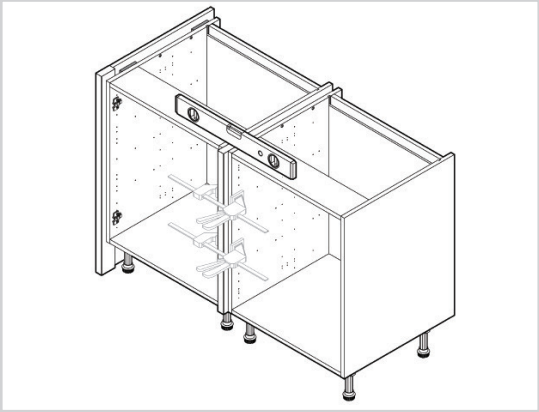

Securing the additional units (if required)

Drill and countersink **2** holes on the inside of the unit, and secure the unit using **2x40mm** countersunk screws.

Make sure that the screws are placed so they will not clash with the profile fixing screws from the first unit.

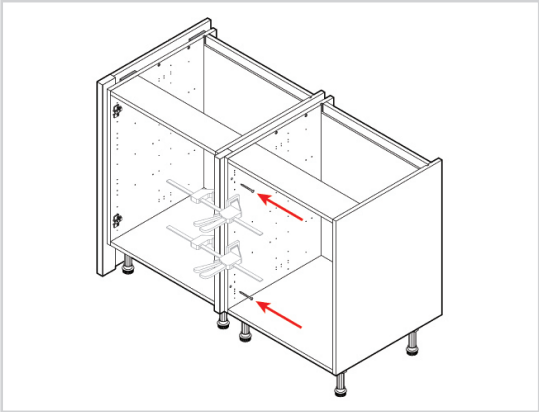

Repeat these steps as required. If there are more units on this run.

Finding the measurements for the top, back, and bottom profiles:

Measure the distance between the profiles/ decor panels at each end of the run.

Take this measurement at the back, top, and bottom, as shown.

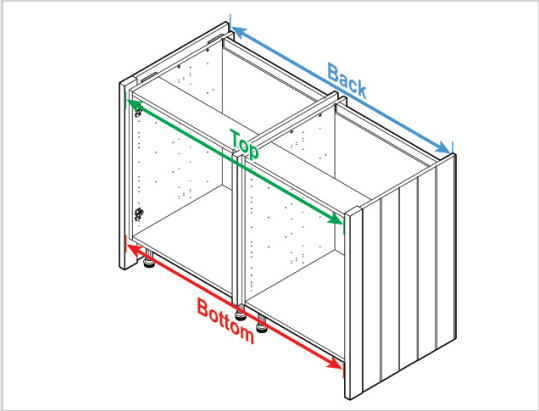

Making a cutting list

Make a cutting list with the measurements taken. Plan the unfinished profile for use at the back of the units.

This step will help you avoid mistakes and will allow you to determine the most efficient use of the materials available.

Keep all offcuts as these may be required later.

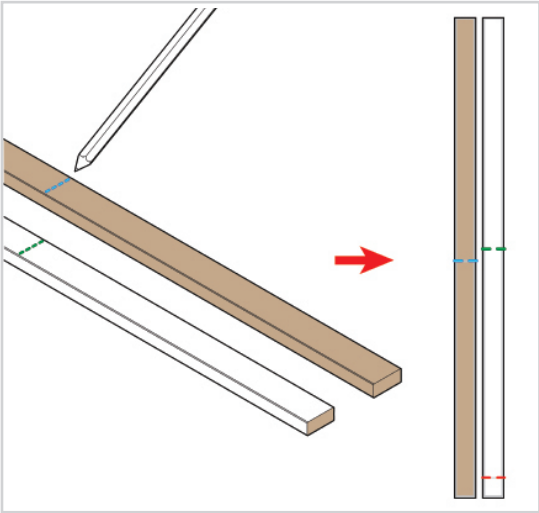

Cutting the profiles

Use a chop saw to cut the top and bottom profiles to size.

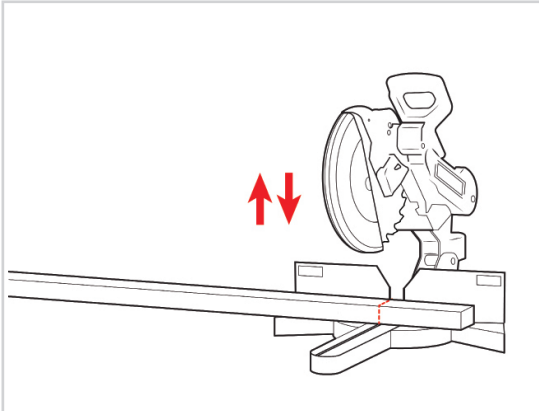

Cutting the bottom profile

Using a circular saw, reduce the depth of the bottom profile from **70mm** to **60mm**, to allow space for the unit legs.

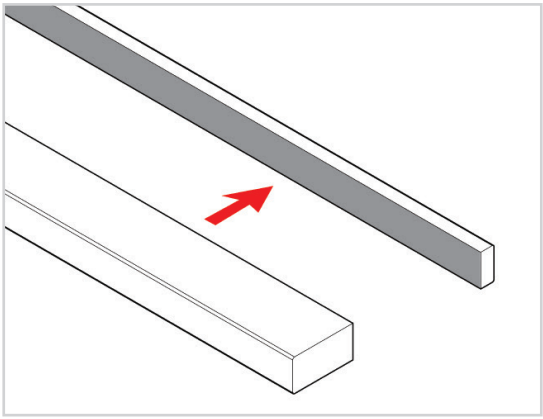

Units 600mm wide or less should have 2 screws along the profiles.
Units 650mm and above should have 4 screws along the profiles.

Securing the bottom profile

Position the bottom profile the **thickness of the frontal + 2mm** forward of the unit, and clamp in place.

Drill and countersink evenly spaced holes (according to the number of screws required) along the bottom of the unit, and secure the profile using **40mm** countersunk screws.

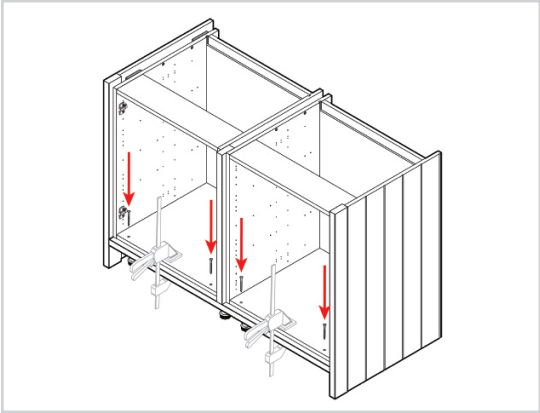

Securing the top profiles

The top profiles need to be positioned the **thickness of the frontal + 2mm** forward of the unit and clamp in place.

Drill and countersink evenly spaced holes (according to the number of screws required) along the top profile. Use **40mm** countersunk screws to secure the profile.

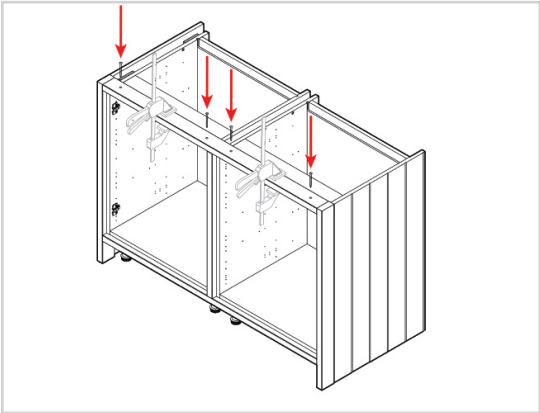

Securing the back profile

Position the profile at the back of the units, then drill and countersink holes in line with the unit side panels as shown.

Use **40mm** countersunk screws to fix the profile into place.

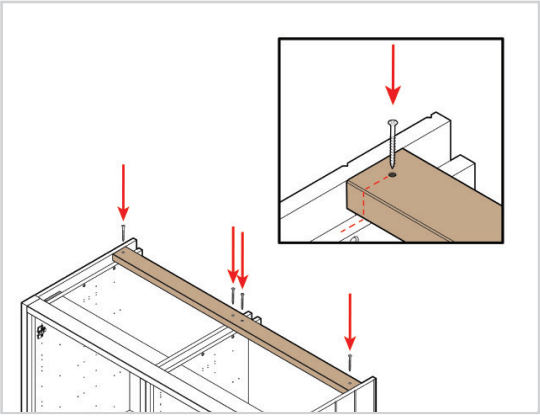

Additional profile (Runs of units over 1000mm wide)

If the run of units is over **1000mm** wide, then an additional **70x30mm** profile should be used between the back and top profiles for support.

Measure the distance between the front and back profiles, then cut the extra profile to size.

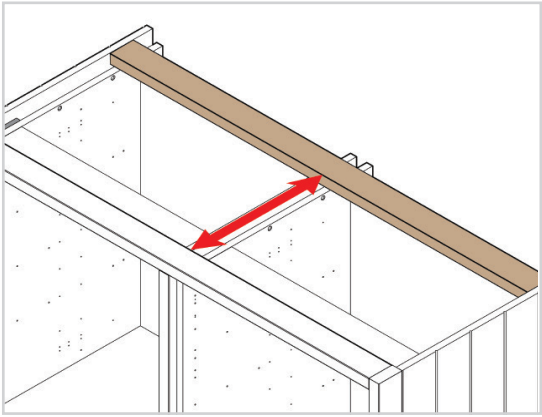

Marking the additional profile

Hold the extra profile over the unit side panels and use a pencil to draw **2** lines marking the position for the screws as shown.

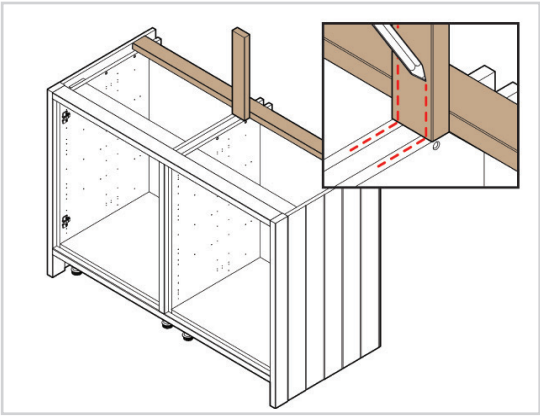

Securing the additional profile

Put the extra profile in position, and then predrill and countersink **2x40mm** screws in the positions shown.

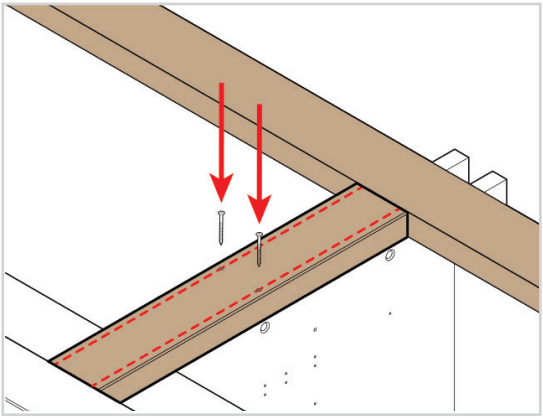

Attaching the frontal

The frontal needs to be re-attached to the unit by clipping the hinge arm onto the hinge plate.

Position the hinge arm on the hooks on the hinge plate. Then push the rear of the hinge arm towards the hinge plate until it clicks.

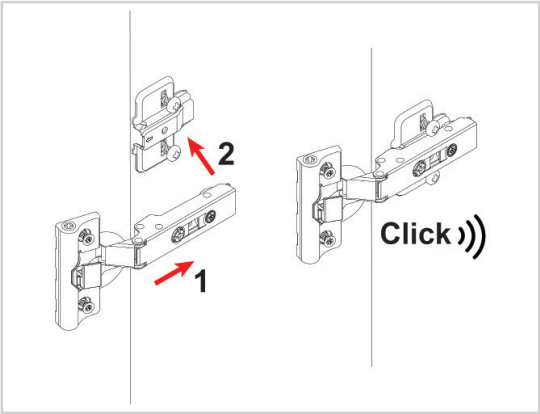

Finishing Touches

Finally, finish off by fitting cover caps over the visible screw heads and cleaning the unit of any dust created during installation.

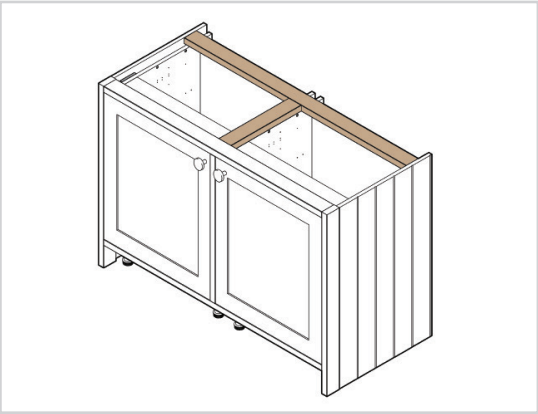

INFINITY PLUS INFRAME

Belfast Sink Base Unit

Profile Fitting Guide

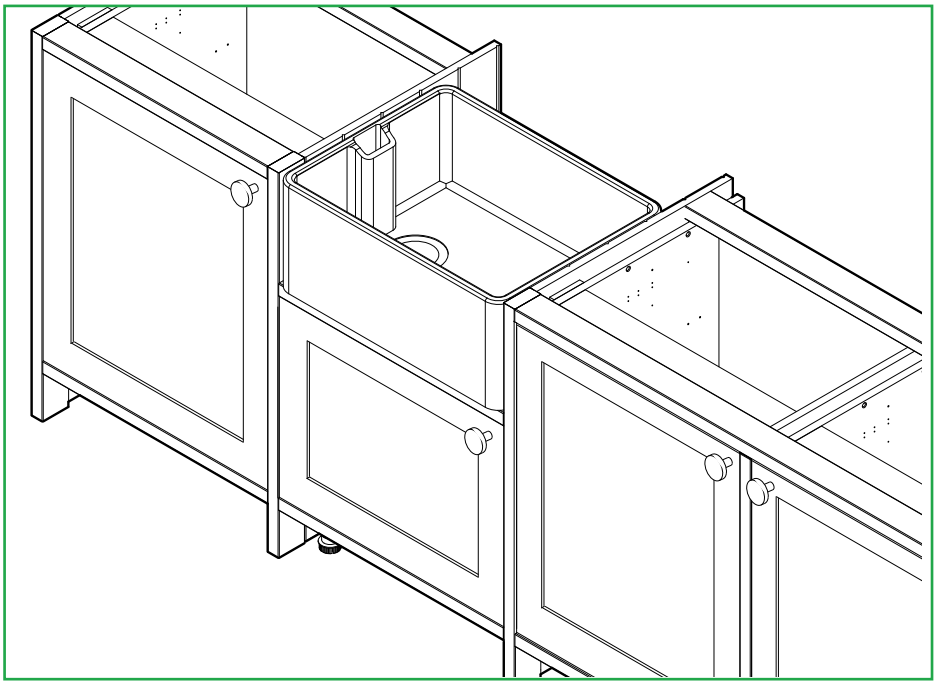

Parts Required

Profile
(Top and Mid)

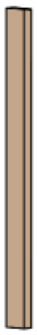

Profile
(Back)

11X40mm
Screw

18x
Cover Caps

Tools Required

Circular
Saw

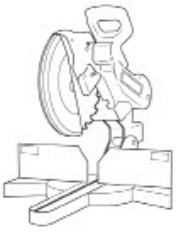

Chop
Saw

Drill

Screwdriver

Clamp

Tape
Measure

The Belfast units should already be built; if not, please refer to “Belfast unit” fitting guide before starting this guide.

Remember to take care when unpacking. Please keep your workspace clean, clear and tidy when working. This will help keep all items safe from any damage. Any un-needed cardboard or plastic should be flattened down and placed in the bin.

Removing the frontal

Before installing the unit, remove the frontal by pulling the release catch.

Place the frontal in the door safe along its longest length.

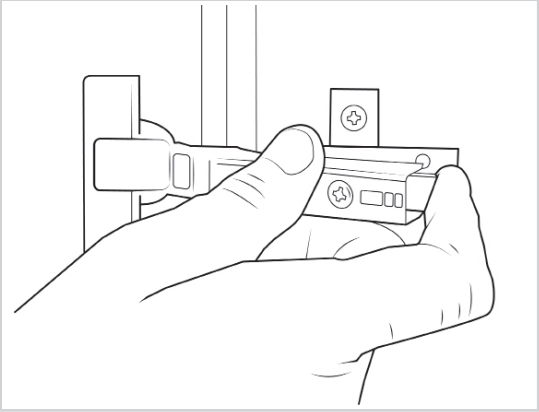

Positioning the unit

To begin with, position the unit in between two other base units and confirm the unit legs are set to **140mm** in height.

Adjust the legs to the correct height by turning clockwise or anti-clockwise.

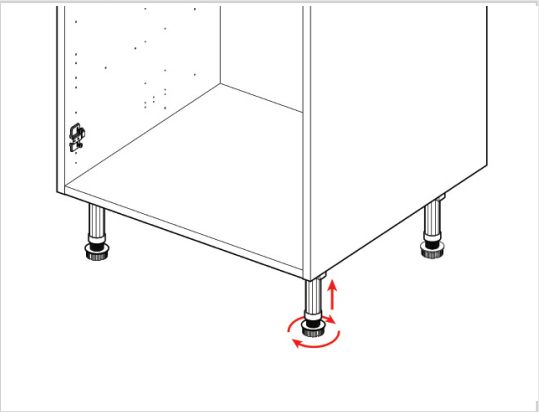

Screws should be placed in front of the hinge plate where possible. This will help to conceal the screw heads.

Securing the units

Clamp the unit together, then drill and countersink **2** holes on either side of the unit. Secure the profile using **2x40mm** countersunk screws.

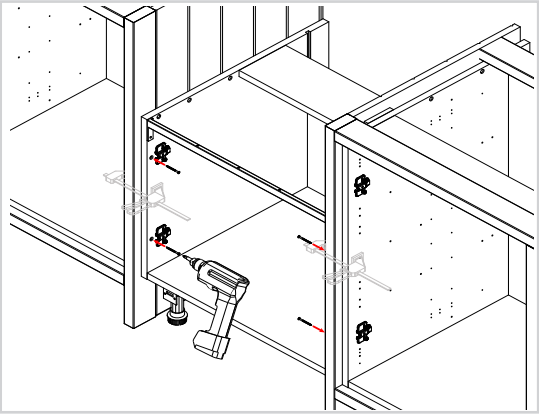

Finding the measurements for the top, back and bottom profiles

Measure along the top, back and bottom of the unit, as shown.

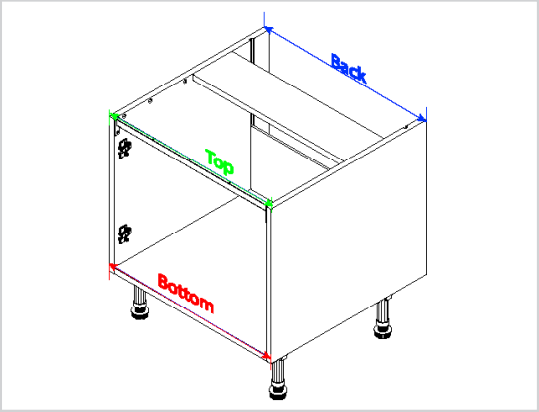

Cutting the profiles to size

Using the measurements gained, cut the back, top and bottom profiles to size.

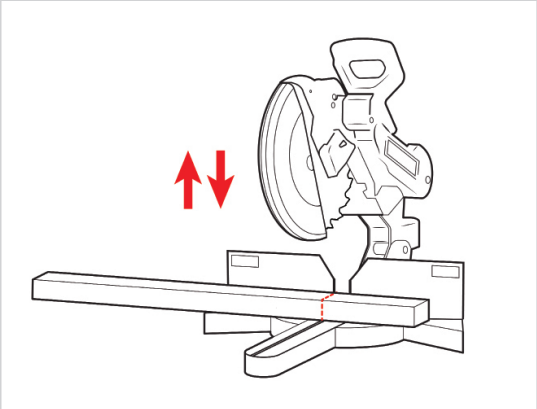

Cutting the bottom profile

Measure and mark a line **10mm** from the back of the bottom profile.

Then, use a circular saw to remove **10mm** from the back of the bottom profile. This will allow the profile to be placed correctly in front of the unit legs.

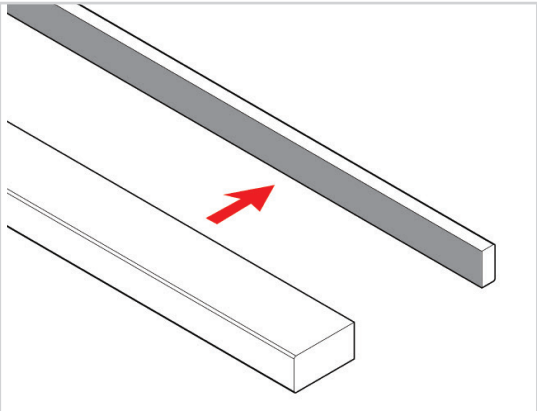

Securing the top profile

Position and clamp the top profile the **thickness of the door + 2mm** forward of the unit.

Once clamped in place, secure the top profile using **3x40mm** countersunk screws.

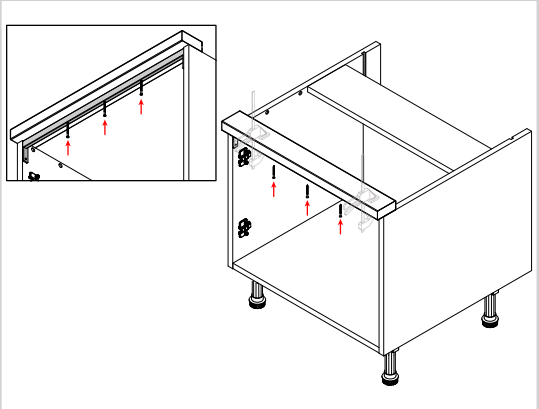

Remove the shelf liner for the next step.

Securing the bottom profiles

Drill and countersink **2** holes into the bottom of the belfast unit.

The profiles now need positioning and clamping in place. The bottom profiles need to be positioned the **thickness of the door + 2mm** forward of the unit.

Use **2x40mm** countersunk screws to secure the bottom profile in place.

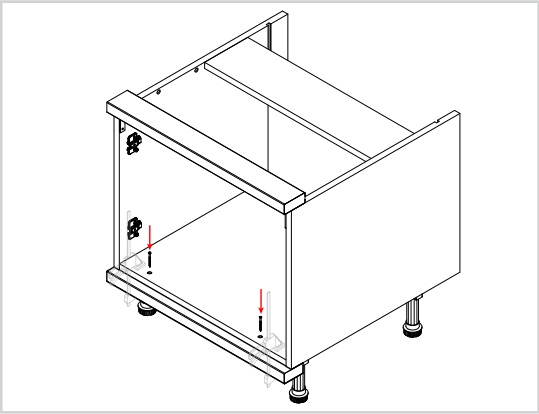

Securing the back profiles

The back profile needs to be secured into the centre of the supporting rail using **2x40mm** countersunk screws. (This position may change due to sink positioning).

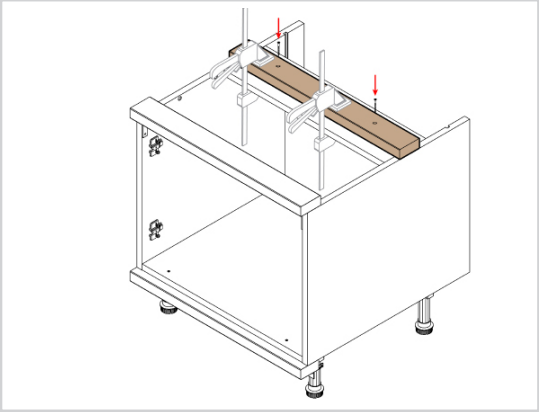

Attaching the frontal

The frontal should be re-attached to the unit by clipping the hinges onto the hinge plates. The bar of the hinge needs to be positioned into the hooks on the hinge plate. Then the rear of the hinge pushed to the hinge plate until it clicks.

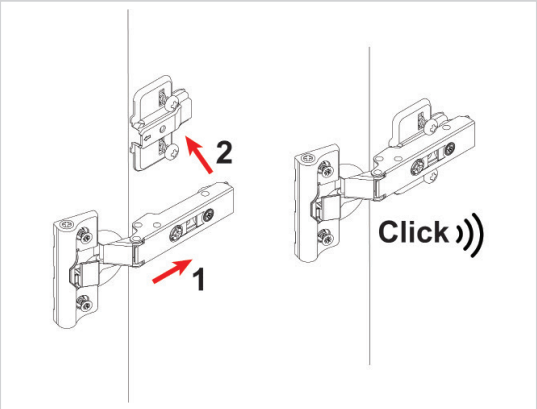

Finishing Touches

Finally, finish off by fitting cover caps over the visible screw heads and cleaning the unit of any dust created during installation.

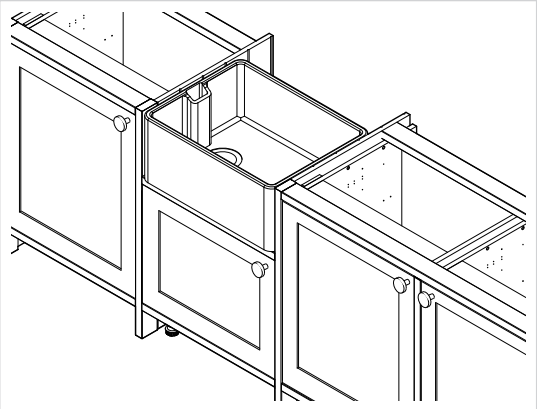

wren KITCHENS

Mid-Run Appliance (Excluding dishwashers)

Profile Fitting Guide

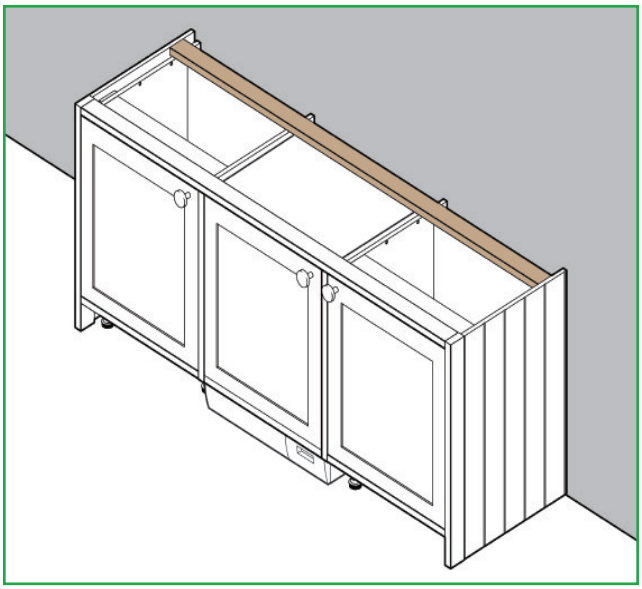

Parts Required

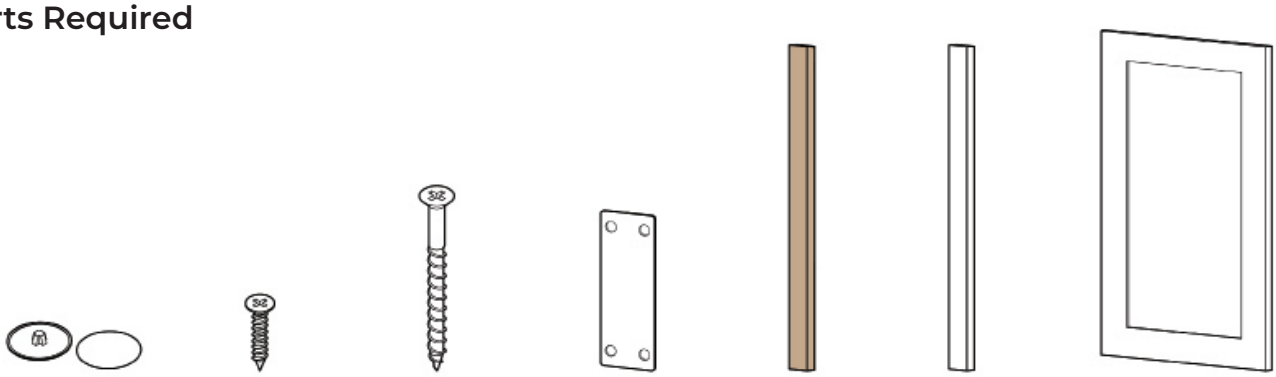

Cover Caps | 15mm Screws | 40mm Screws | Connecting Plates | Back Profile | Profile | Frontal

Tools Required

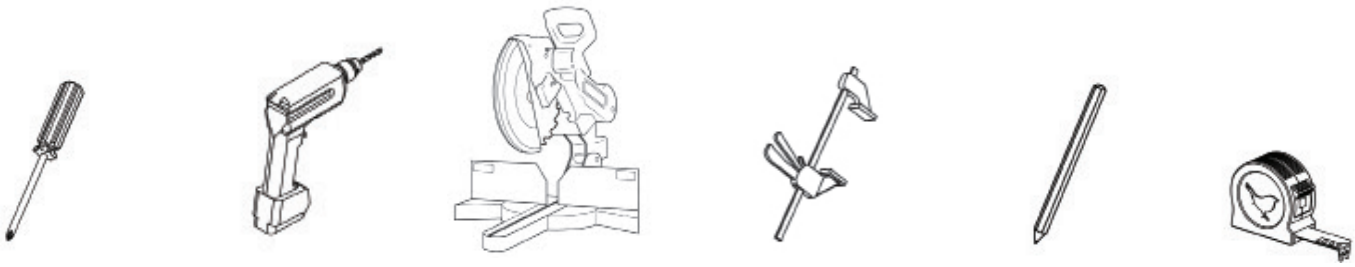

Screwdriver | Drill | Chop Saw | Clamps | Pencil | Tape Measure

The adjacent base units should already be built. If not, please refer to the fitting guide for your units before starting this guide.

Remember to take care when unpacking. Please keep your workspace clean, clear, and tidy when working. This will help keep all items safe from damage. Any unneeded cardboard or plastic should be flattened down and placed in the bin.

Removing the frontals from the adjacent units

To remove the frontals, pull the release catch at the end of the hinge arm, as shown in the image.

Place the frontals in a door-safe pack until needed again.

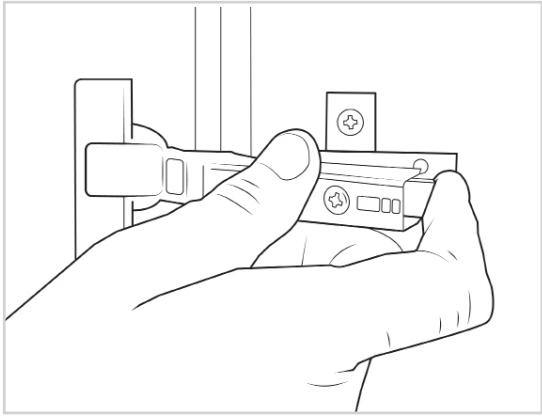

Adjusting the leg height

Make sure the legs of the adjacent units are adjusted to **140mm** high and the units are level.

If necessary, adjust the legs by turning them clockwise or anti-clockwise.

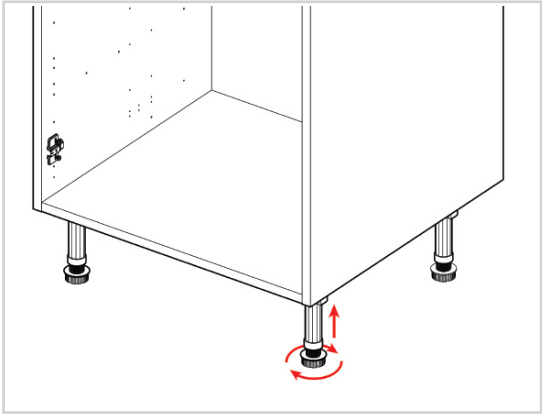

Finding the width measurement for the top and back profiles

Measure the distance between the end profiles/decor panels at each end of the run.

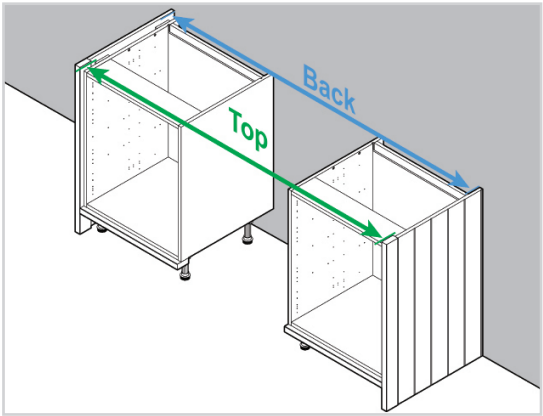

Cutting the profile

Use a chop saw to cut the top and back profiles to size.

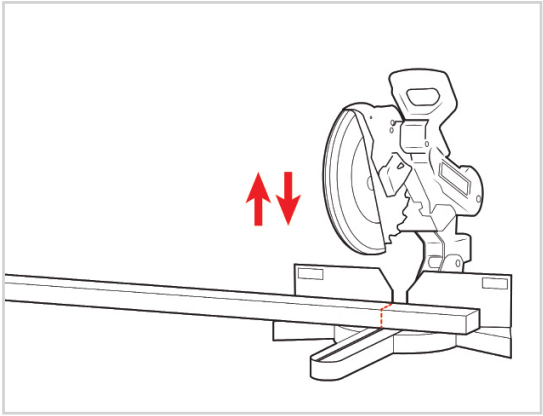

Units 600mm wide or less should have 2 screws along the profiles.
Units 650mm and above should have 4 screws along the profiles.

Securing the top profile

Position the top profile in place and clamp against the unit, ensuring the profile is set forward by the frontal thickness **+2 mm.**

Drill and countersink evenly spaced holes (according to the number of screws required) into the top of the profile and secure using **40mm** countersunk screws.

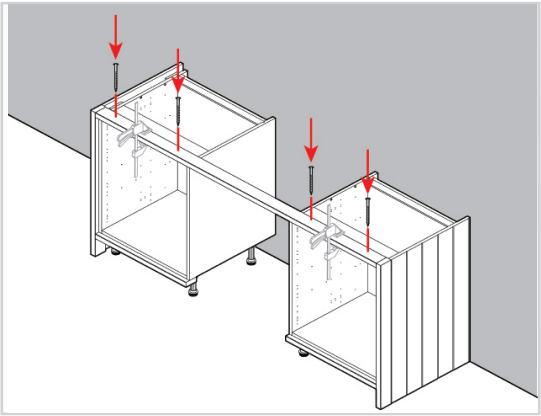

Securing the back profile

Position the profile at the back of the units, then drill and countersink holes in line with the unit side panels as shown.

Use **40mm** countersunk screws to fix the profile into place.

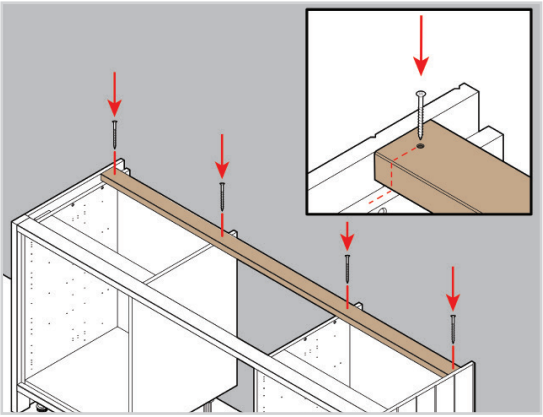

Finding the measurement for the mid-profiles

Either side of the appliance will need a mid-profile.

Measure from the underside of the bottom profile to the underside of the top profile on both sides of the appliance space.

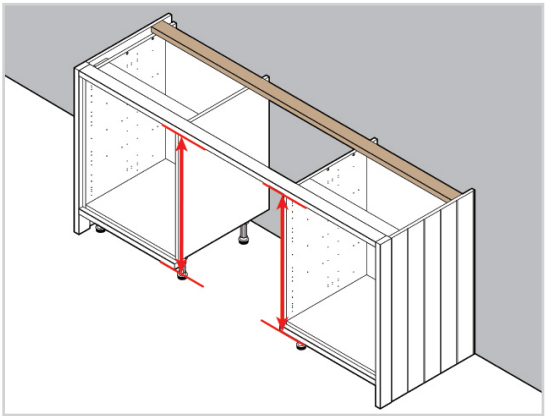

Cutting the profiles

Use a chop saw to cut the mid-profile pieces to the correct height.

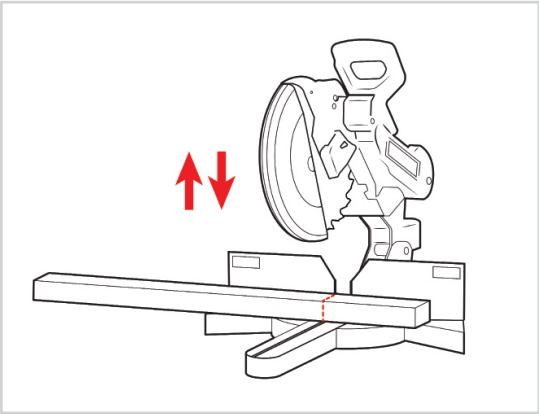

Place the cut side of the end profile to the top of the cabinet.

Clamping the mid-profile

Clamp the mid-profile pieces to the sides of the adjacent units. Make sure they are set forward from the units by the **frontal thickness + 2mm**.

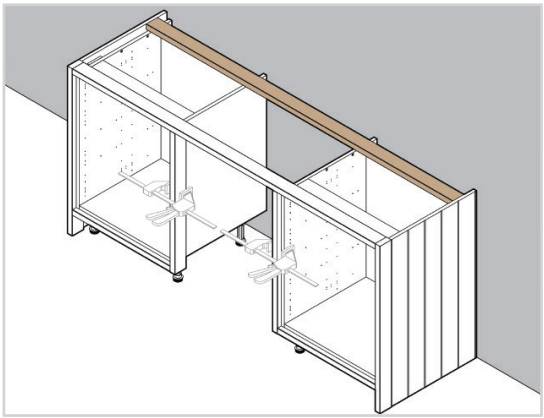

Securing the mid-profile

Drill and countersink **2** evenly spaced holes on the inside of each unit where the profile will be installed. Use **40mm** countersunk screws to fix the profile into place.

If possible, place the screws in front of the hinge plates. This will help to conceal the screw heads.

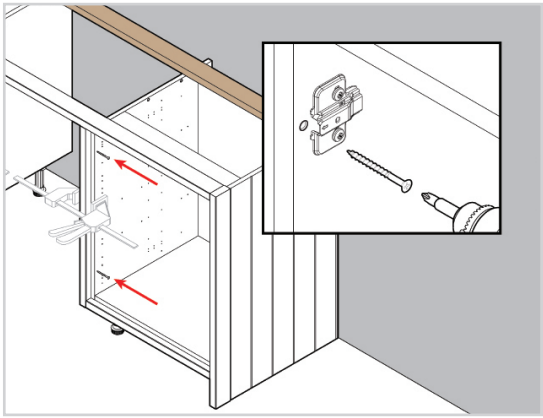

Fixing the offcuts

From inside the units towards the back drill and countersink holes through the side panels.

Using **40mm** screws fix pieces of wood to the opposite sides of these panels. Make sure the offcuts used are the same widths as the mid profiles.

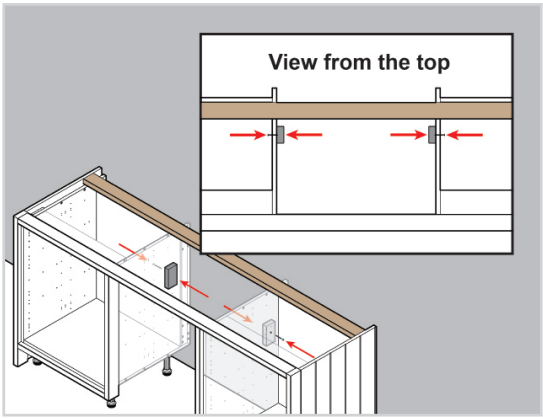

Positioning the appliance

Slide the appliance into place and secure it following the manufacturer's instructions.

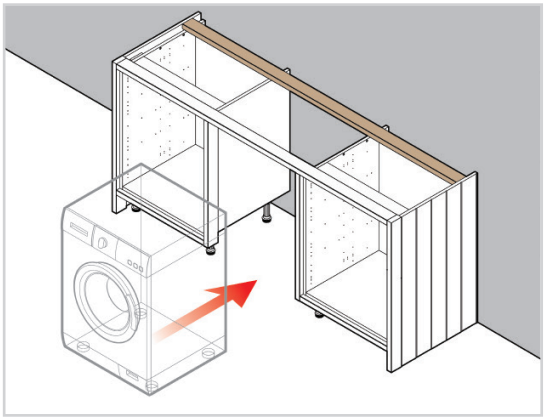

Preparing the frontal

Attach the **30mm** bottom profile to the dishwasher frontal, using **2** connecting plates and **4x15mm** screws per plate.

Ensuring a **2mm** gap is maintained between the frontal and the rail.

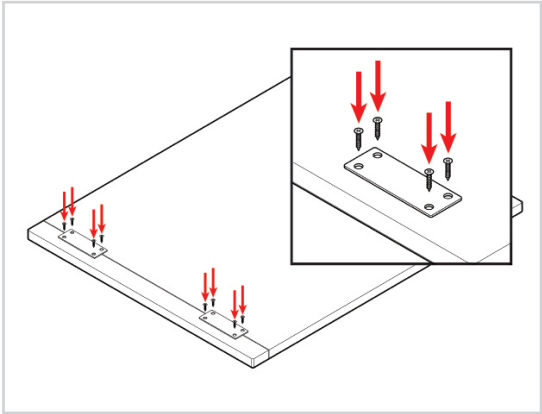

Attaching the handle

To attach the handle to the frontal, please refer to the specific **'Handle'** guide.

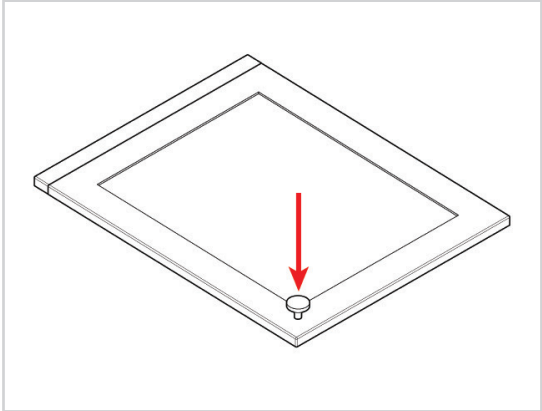

Please see the manufacturer's instructions for attaching the frontal and installing the appliance.

Finishing touches

Finally, cover the visible screw heads using the cover caps provided, and the unit should be thoroughly cleaned to remove any debris that may have accumulated during the installation.

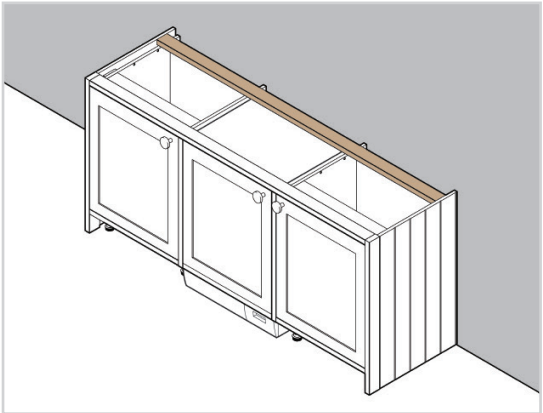

INFINITY PLUS INFRAME

Mid-Run Dishwasher

Profile Fitting Guide

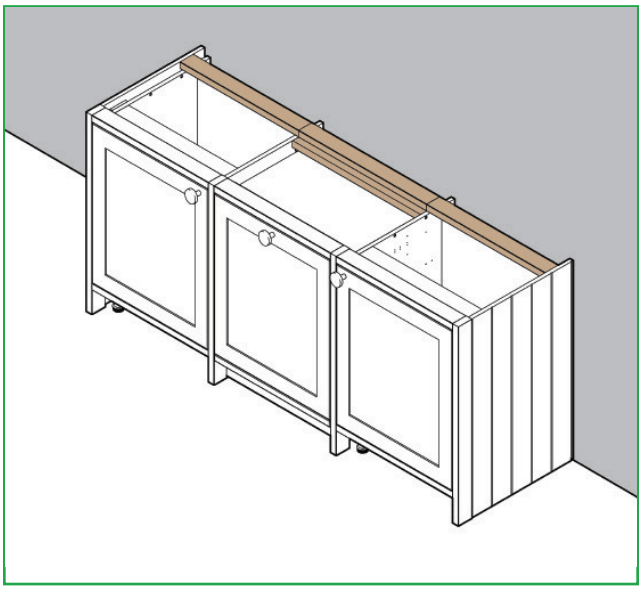

Parts Required

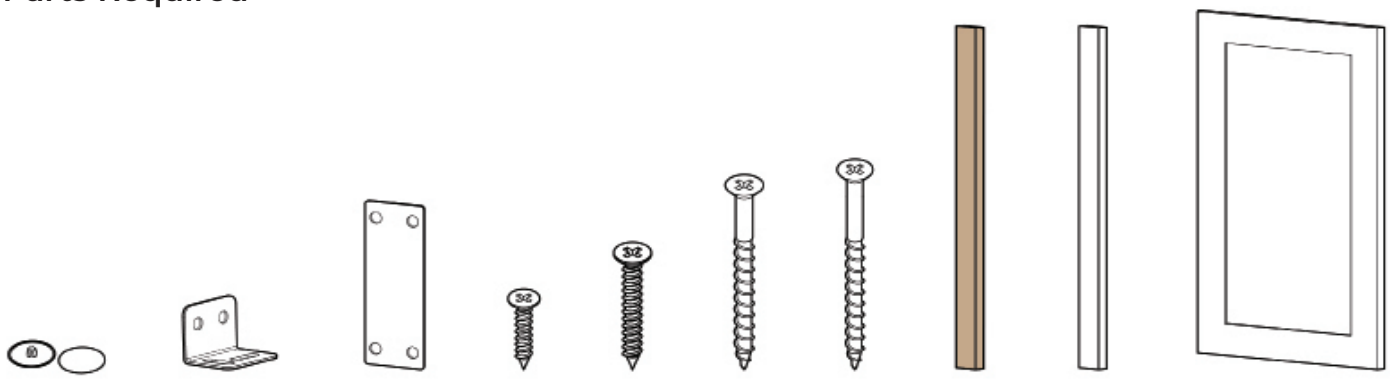

Cover Caps | L Brackets | Connecting Plates | 15mm Screws | 30mm Screws | 40mm Screws | 45mm Screws | Back Profile | Profile | Frontal

Tools Required

Phillips Screwdriver

Drill

Pocket Hole Jig

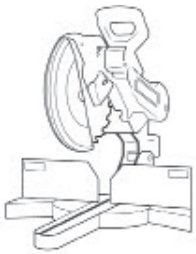

Chop Saw

Clamp

Sealant

Pencil

Tape Measure

The adjacent base units should already be built. If not, please refer to the fitting guide for your units before starting this guide.

Remember to take care when unpacking. Please keep your workspace clean, clear, and tidy when working. This will help keep all items safe from damage. Any unneeded cardboard or plastic should be flattened down and placed in the bin.

Removing the frontals from the adjacent units

To remove the frontals, pull the release catch at the end of the hinge arm, as shown in the image.

Place the frontals in a door-safe pack until needed again.

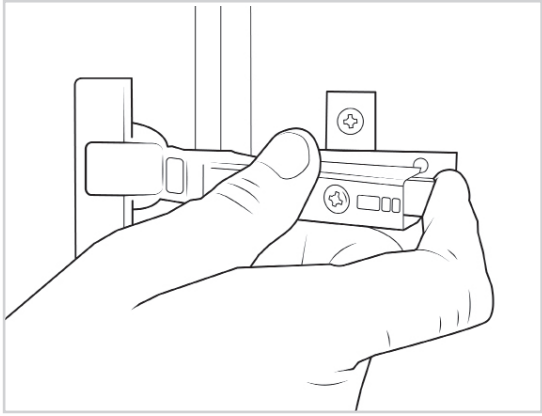

Adjusting the leg height

Make sure the legs of the adjacent units are adjusted to **140mm** high and the units are level.

If necessary, adjust the legs by turning them clockwise or anti-clockwise.

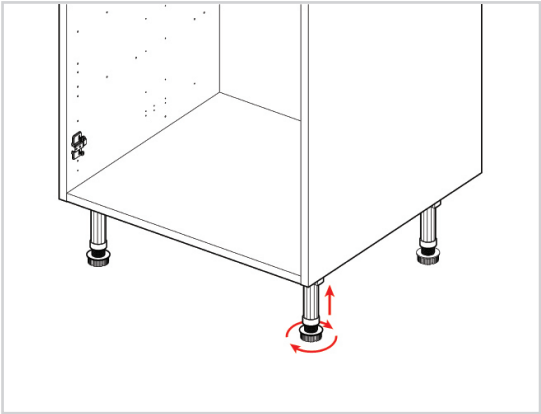

Finding the height measurements for the end profiles

Measure from the floor to the top of the adjacent units, then add **30mm** to this measurement to allow for the top profiles.

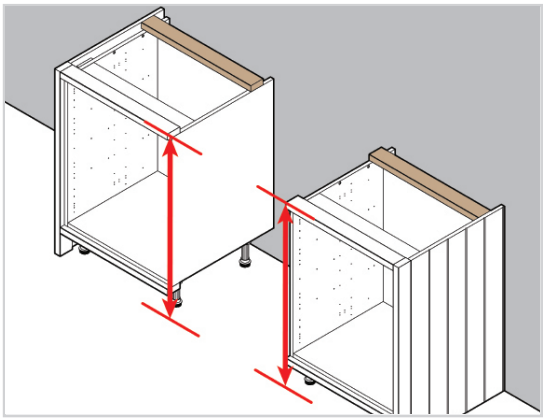

Cutting the end profiles

Use a chop saw to cut two end profiles to the measurements taken.

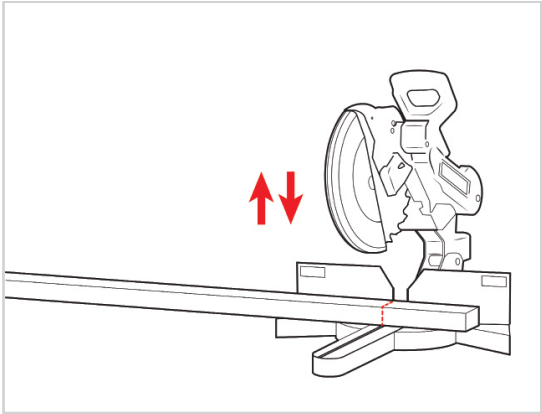

Place the cut side of the end profile to the top of the cabinet.

Clamping the profiles in place

Clamp the profiles in place, making sure they are correctly aligned with the units and top profiles, and set forward from the units by the **frontal thickness + 2mm**.

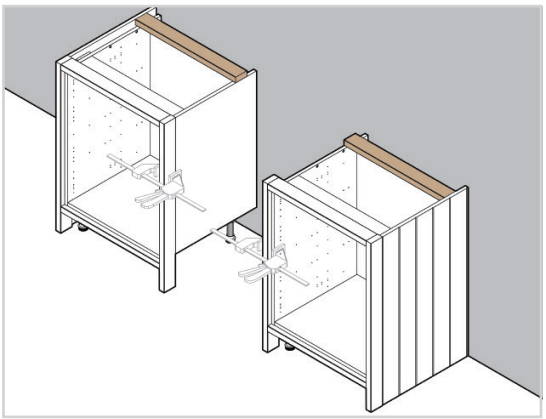

Securing the end profile

Drill and countersink **2** holes inside the unit, and secure the profile using **2x40mm** countersunk screws.

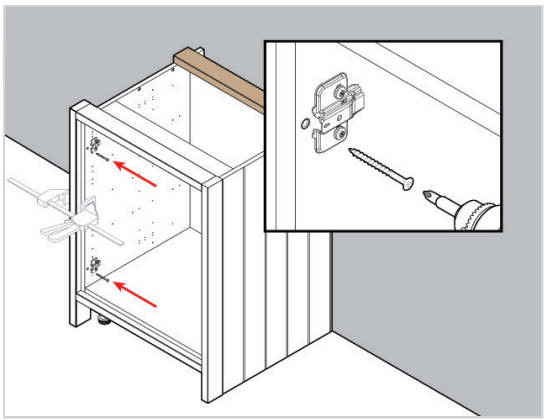

Screws should be placed in front of the hinge plate, where possible. This will help to conceal the screw heads.

Finding the width measurement for the front profiles

Measure the width of the dishwasher frontal and then add **4mm** to the measurement.

For example, a **596mm** dishwasher frontal would need **600mm** front profiles.

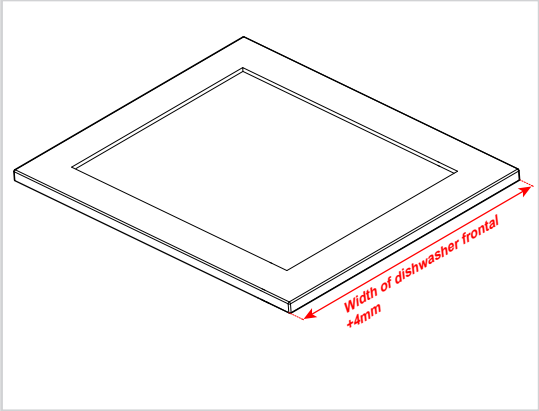

Cutting the front profiles

Use a chop saw to cut **2** pieces of front profile to size.

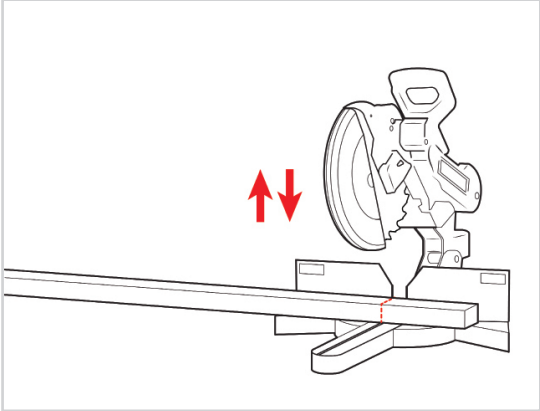

Finding the width measurement for the back profiles

Measure the width of the dishwasher frontal and then add **64mm** to the measurement.

For example, a **596mm** dishwasher frontal would need **660mm** back profiles.

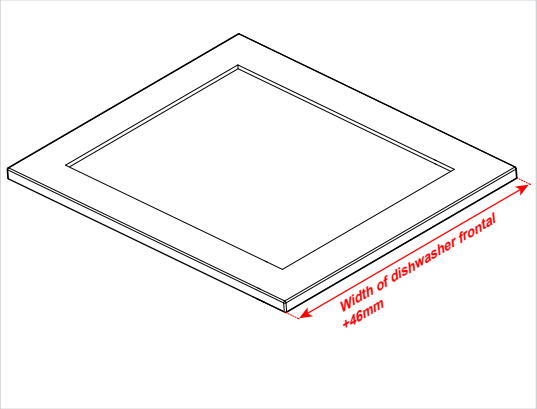

Cutting the back profiles

Use a chop saw to cut **2** pieces of back profile to size.

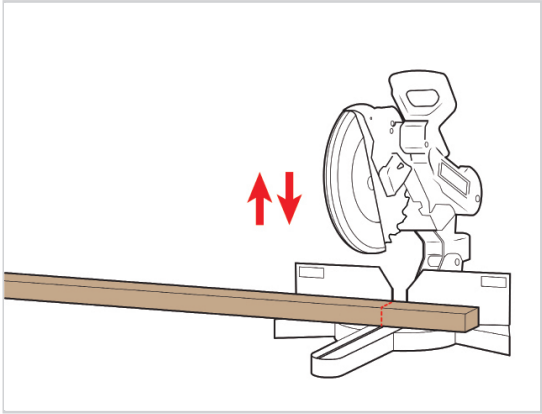

Drilling the pilot holes

Next, using a pocket hole jig, drill **2** holes at both ends of **1** of the wrapped front profiles.

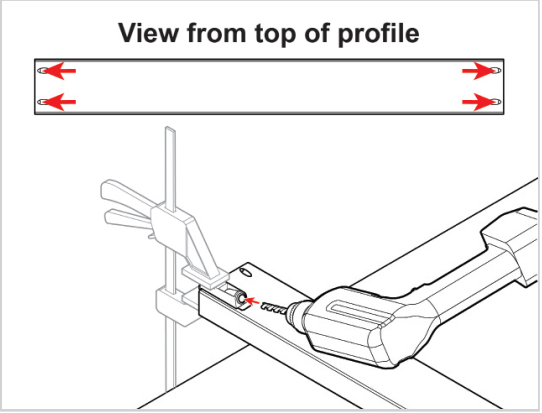

Attaching the front profile

Use **4x30mm** pan head screws to attach the front profile to the vertical end profiles. Ensure the profiles are aligned along the run.

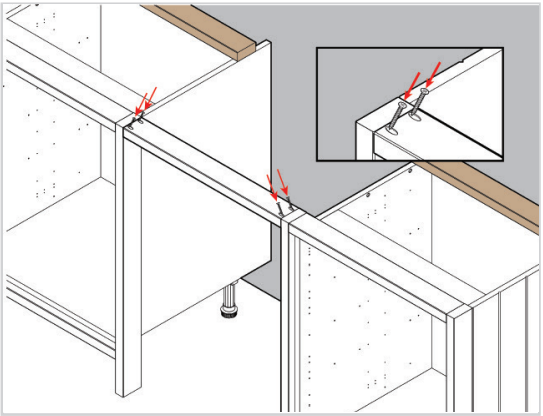

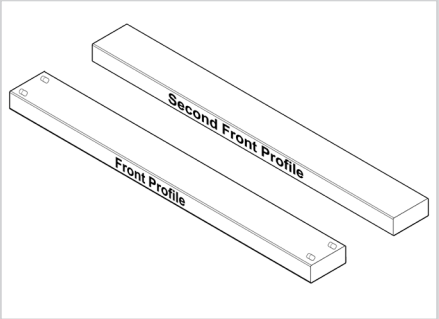

This step is essential, as the dishwasher cannot be fitted without the second profile installed.

Positioning the second profile

Place the second front profile into position underneath the attached front profile. Offset the front of the second profile backwards by **30mm**.

Clamp the profile into position and double check that the offset is correctly set at each end.

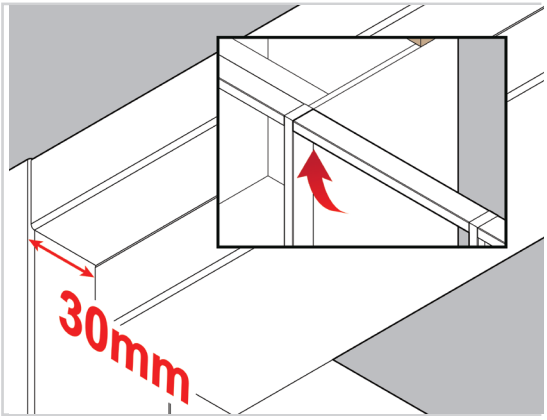

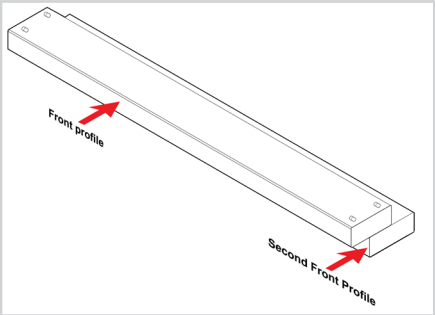

Attaching the second profile

Predrill and countersink **4** equally spaced holes along the top of the front rail. Use **4x45mm** screws to secure the **2** profile pieces together.

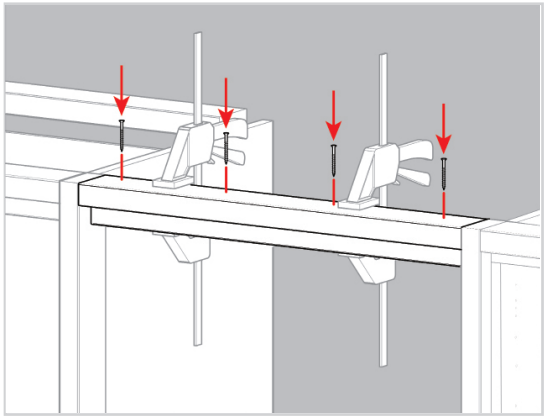

Attaching L brackets to the back profiles

Attach an L bracket to each end of both of the back profiles using **2x15mm** screws per bracket.

Make sure the L brackets are placed as shown.

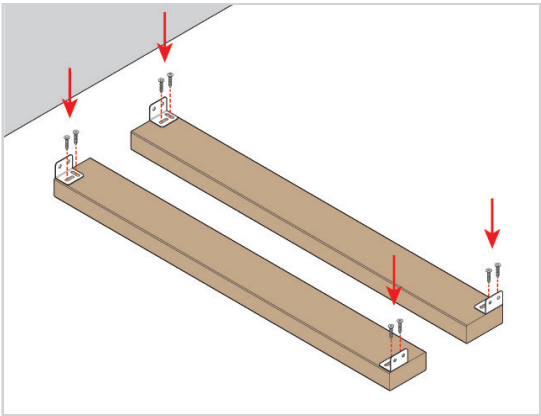

Attaching the profile pieces together

Position the second back profile on top of the first, ensuring the second is offset by **30mm**, along the length, and clamp the profiles together.

Drill and countersink **4** evenly spaced holes, then secure the profiles using **4x45mm** screws.

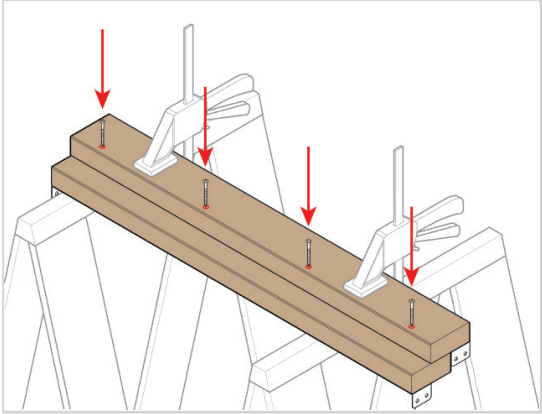

Attaching the back profiles

Use **2x15mm** screws per L-bracket to attach the back profiles to the adjacent units.

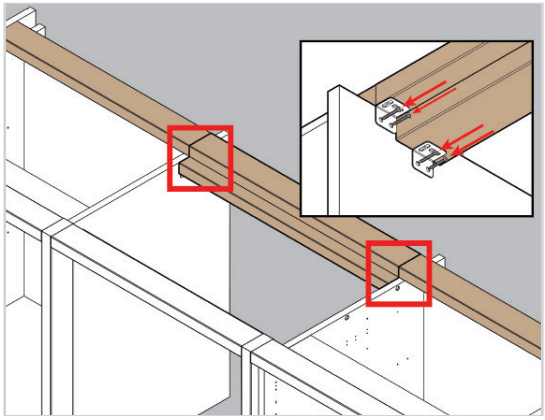

Fixing the offcuts

From inside the units towards the back drill and countersink holes through the side panels.

Using **40mm** screws fix pieces of wood to the opposite sides of these panels. Make sure the offcuts used are the same widths as the mid-profiles.

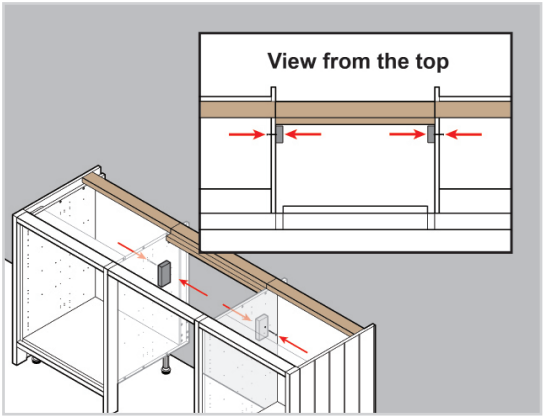

Preparing the frontal

Connect the dishwasher frontal and the **30mm** rail using **2x** connecting plates and **4x15mm** screws per plate.

Make sure a **2mm** gap is maintained between the frontal and the rail.

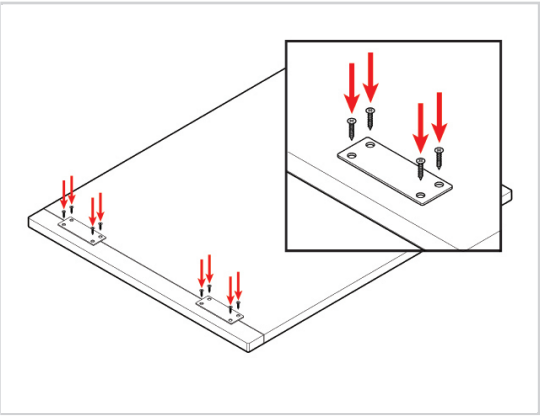

Attaching the handle

To attach the handle to the frontal, please refer to the specific **'Handle'** guide.

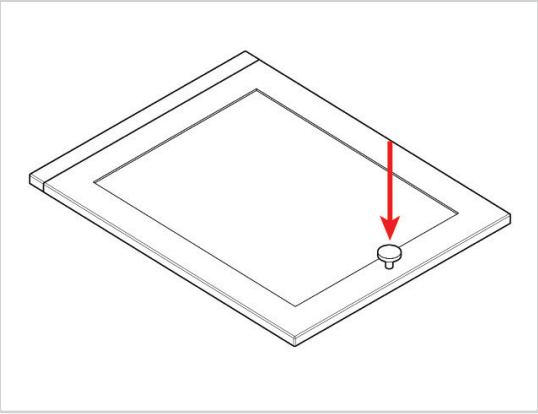

Please see the dishwasher manufacturer's instructions for attaching the frontal and installing the dishwasher.

Finishing touches

Finally, finish off by fitting cover caps over any visible screw heads and cleaning the profiles and units of any dust created during installation.

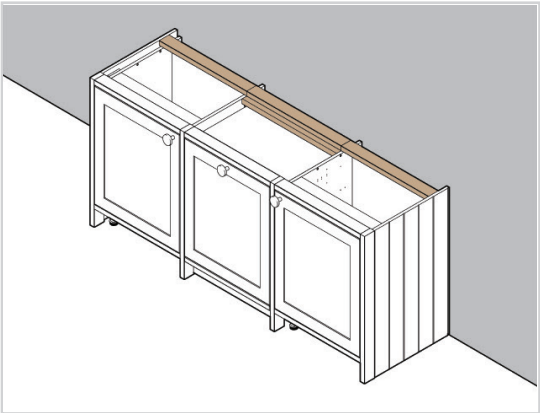

INFINITY PLUS INFRAME

End-Run Dishwasher

Profile Fitting Guide

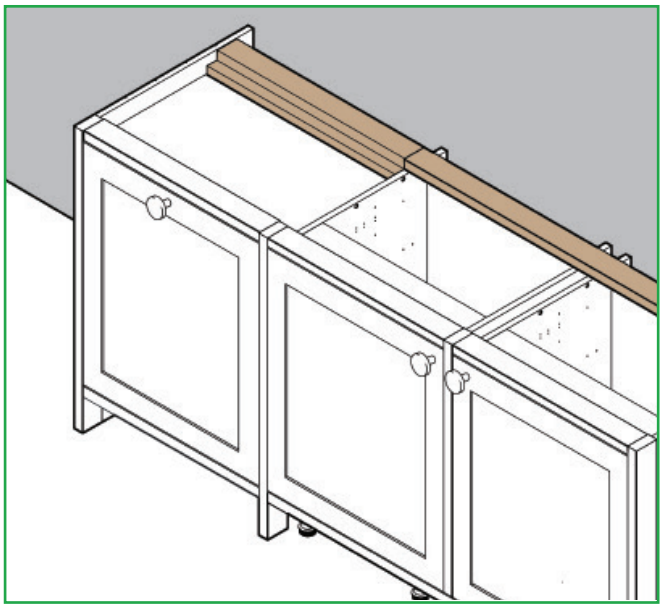

Parts Required

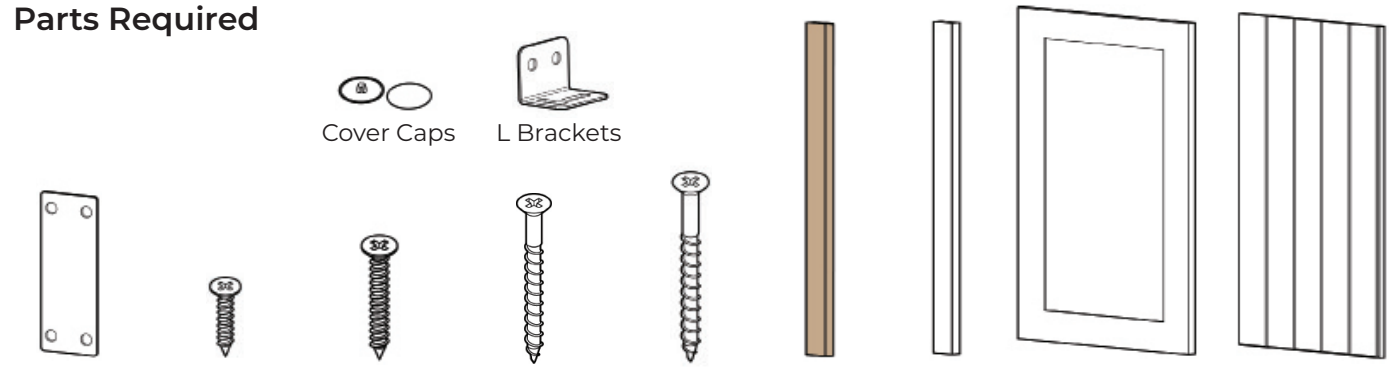

Tools Required

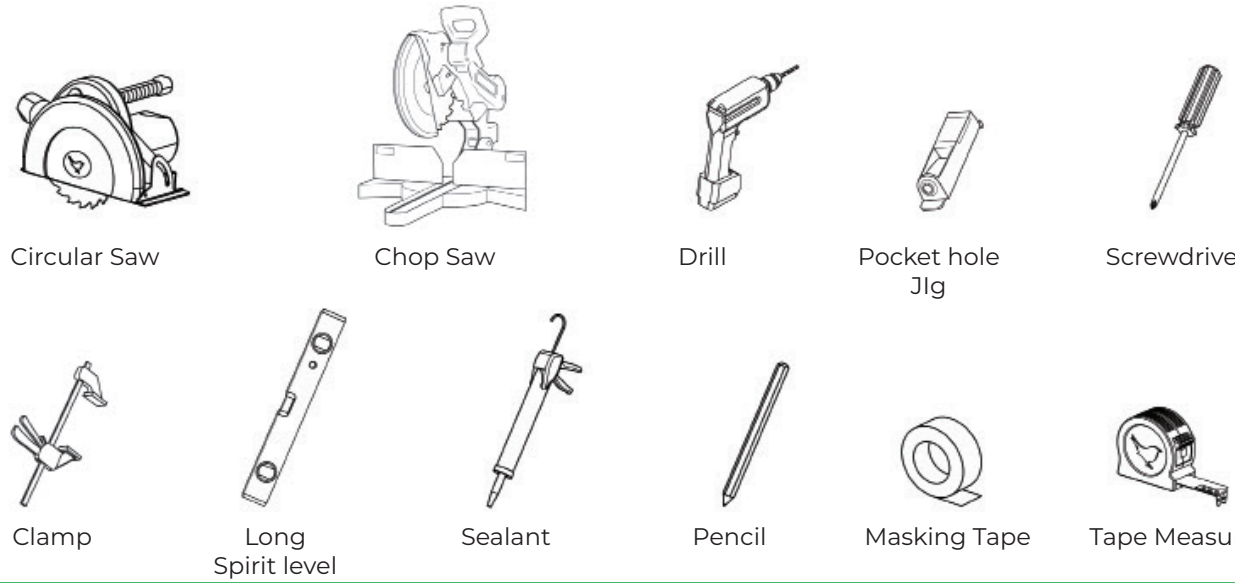

The adjacent base units should already be built. If not, please refer to the fitting guide for your units before starting this guide.

Remember to take care when unpacking. Please keep your workspace clean, clear, and tidy when working. This will help keep all items safe from damage. Any unneeded cardboard or plastic should be flattened down and placed in the bin.

Removing the frontals from the adjacent units

To remove the frontals, pull the release catch at the end of the hinge arm, as shown in the image.

Place the frontals in a door-safe pack until needed again.

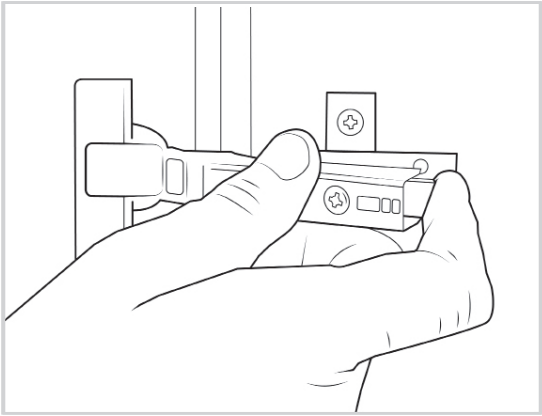

Adjusting the leg height

Make sure the legs of the adjacent units are adjusted to **140mm** high and the units are level.

If necessary, adjust the legs by turning them clockwise or anti-clockwise.

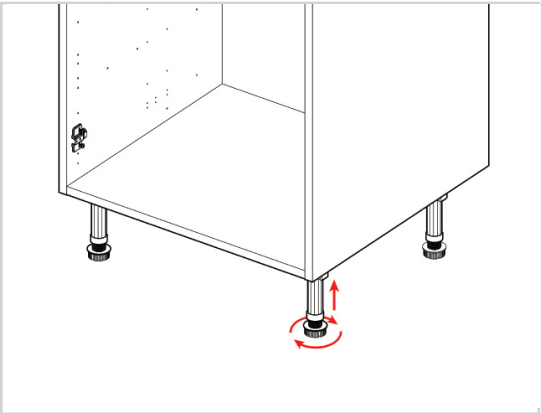

Finding the width measurement for the front profiles

Measure the width of the dishwasher frontal and then add **4mm** to the measurement.

For example, a **596mm** dishwasher frontal would need **600mm** front profiles.

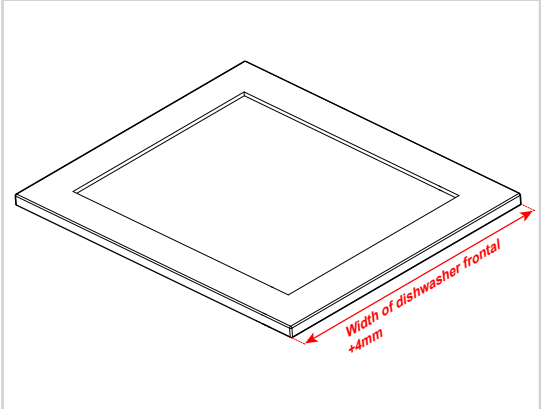

Cutting the front profiles

Use a chop saw to cut **2** pieces of front profile to the measurement taken.

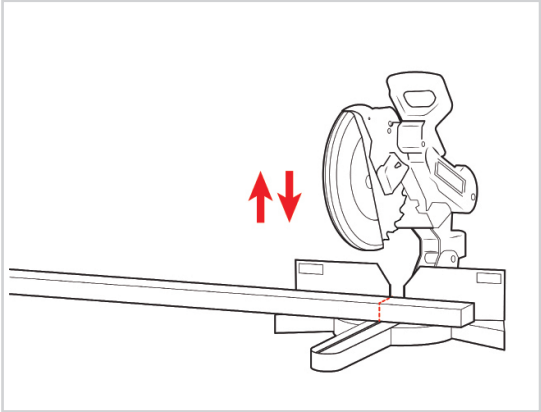

Finding the width measurement for the back profiles

Measure the width of the dishwasher frontal and then add **46mm** to the measurement.

For example, a **596mm** dishwasher frontal would need **642mm** back profiles.

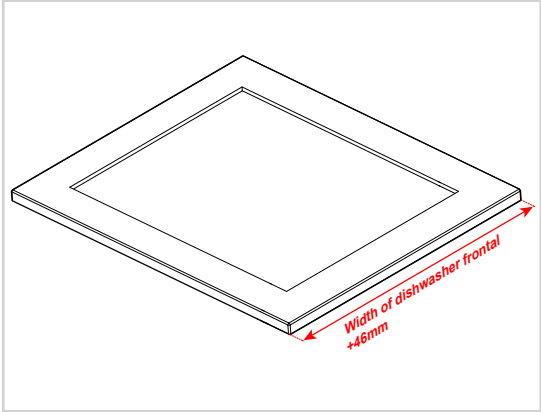

Cutting the back profile

Use a chop saw to cut **2** pieces of back profile to the measurement taken.

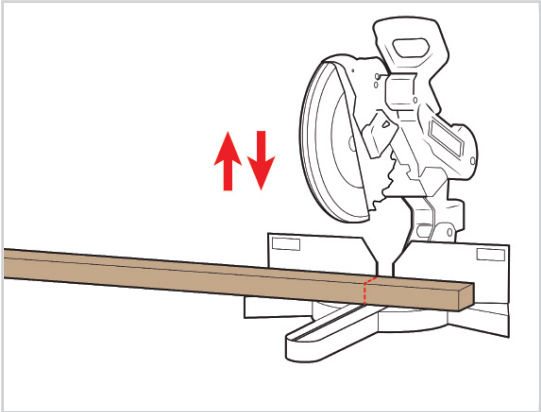

Marking the floor

Lay one of the previously cut, wrapped front profiles on the floor, in line with the run of units, and butted up to the profile on the adjacent unit as shown. Use a long spirit level to make sure the profile piece is aligned correctly.

Place masking tape on the floor, from the end of the profile to the wall, as shown.

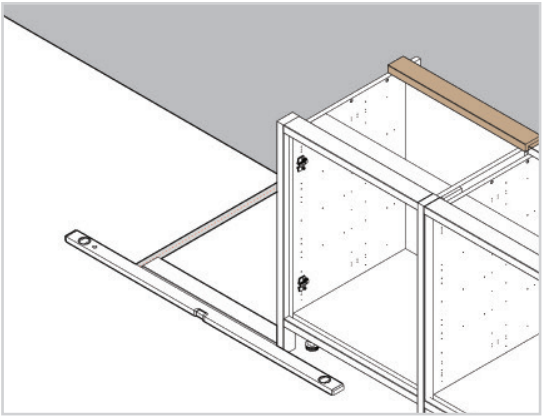

Marking the height of the end profile

Clamp the long spirit level to the front top of the adjacent unit, making sure it overhangs the space where the appliance is planned.

Then place the end profile vertically, butting it up against the profile on the floor.

Use the spirit level and a pencil to mark the height needed for the end profile.

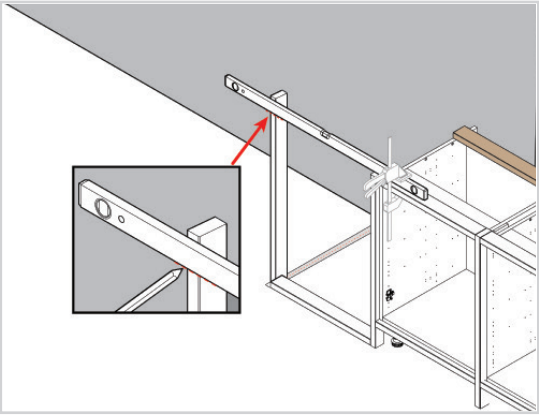

Cutting the end profile

Use a chop saw to cut the end profile to the correct height.

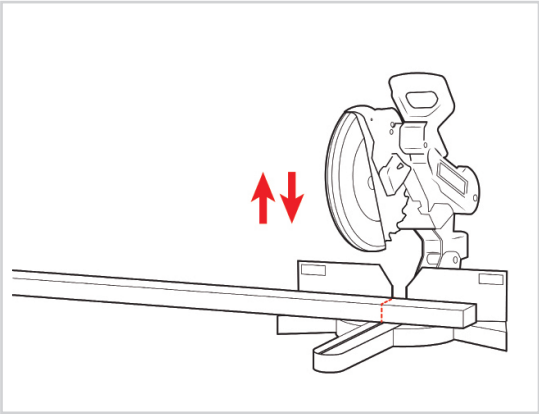

Finding the decor panel height

Clamp the long spirit level to the top back of the adjacent unit, making sure it overhangs the space where the appliance is planned.

Measure the distance from the floor to the underside of the spirit level.

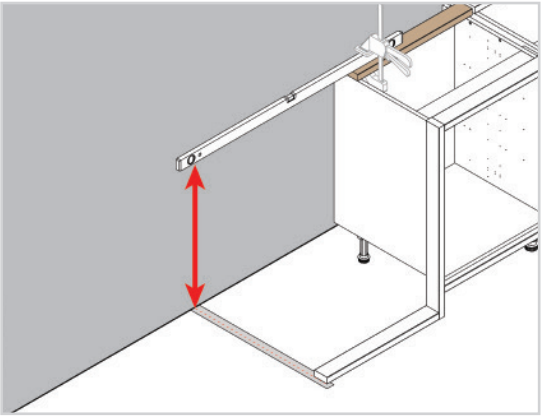

Finding the decor panel width

With the end profile placed vertically and butted up against the profile on the floor, use a pencil to make a mark on the masking tape showing the position of the back of the profile.

Remove the profile, then measure the distance from the mark to the wall.

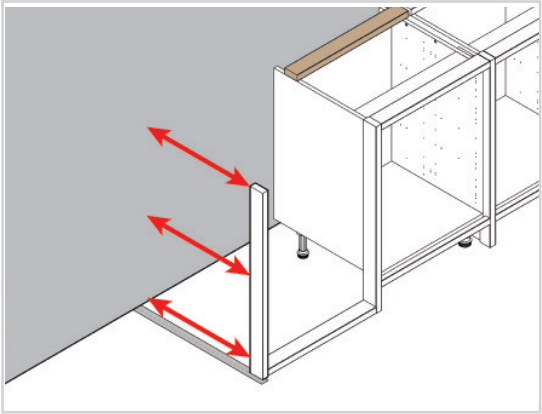

Cutting the decor panel to size

Mark the measurements onto the decor panel using masking tape and a pencil, then use a circular saw to cut the decor panel to size.

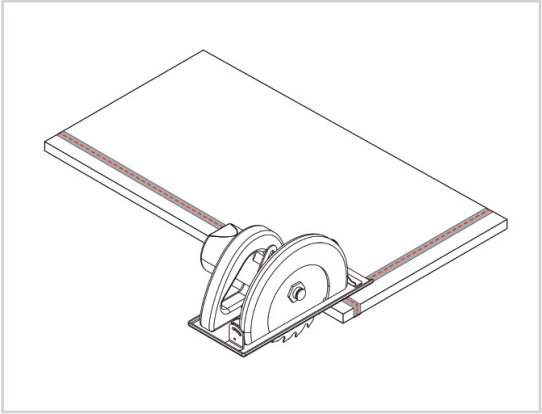

Drilling pilot holes

Mark **4** equally spaced locations on the inside of the decor panel near the front, uncut edge.

Use a pocket hole jig to drill **4** pilot holes as shown.

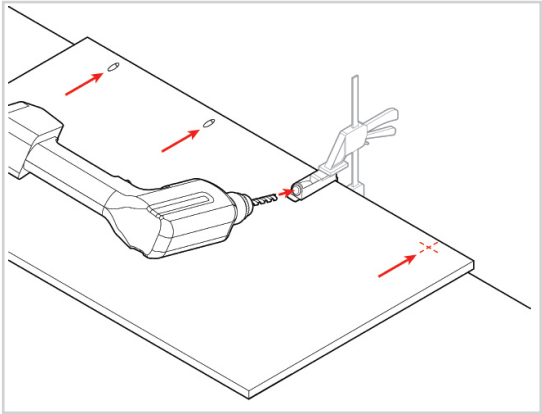

Place the cut side of the end profile to the top of the decor panel.

Securing the profile to the decor

Next, using **4x30mm** panhead screws, secure the profile to the decor panel.

Make sure the profile sits flush with the outside of the decor panel and is positioned so that the cut edge of the decor panel will face upwards when it is installed.

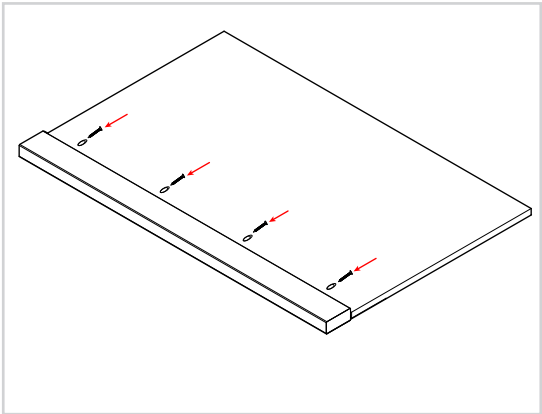

Attaching the L brackets

On the inside of the decor panel, position **2** L brackets at the bottom of the panel and **2** L brackets at the back of the panel, using **2x15mm** screws per bracket.

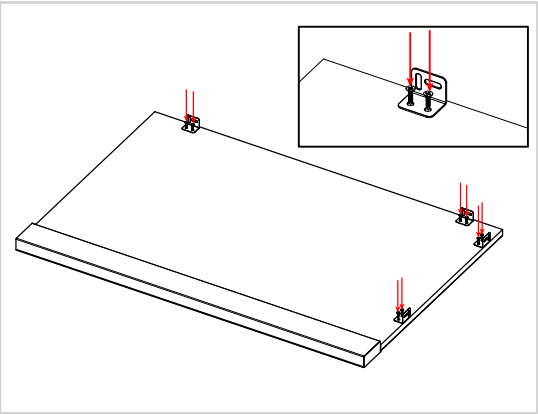

Marking the position of the decor panel

Place the decor at the end of the run, using the profile and markings on the floor to position the decor. Checking that it is level with a long spirit level.

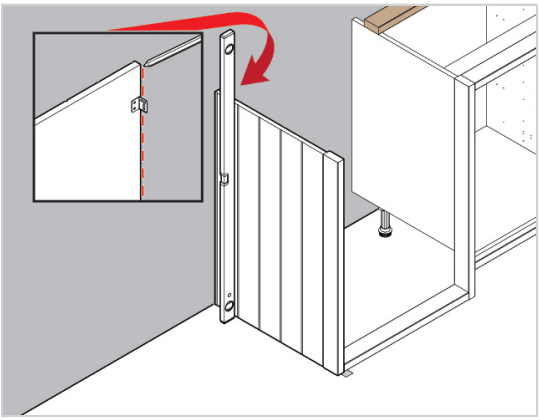

Screws or wall plugs for attaching the decor to the wall and floor are not supplied. This is due to variations in wall and floor materials and construction.

Securing the decor panel

Secure the decor in place.

Loosen any screws as necessary to remove the tape from the floor, then re-tighten.

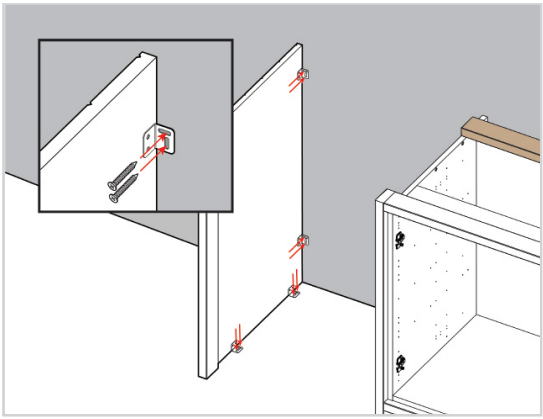

Drilling the pilot holes

Next, using a pocket hole jig, drill **2** holes at both ends of **1** of the wrapped front profiles.

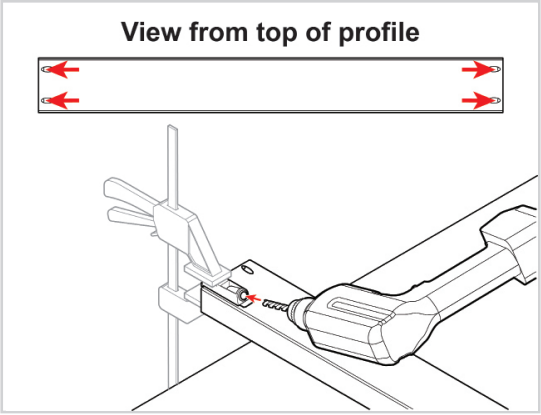

Attaching the front profile

Use **2x30mm** pan head screws to attach the front profile to the vertical end profiles. Ensure the profile is aligned correctly with the adjacent front profile.

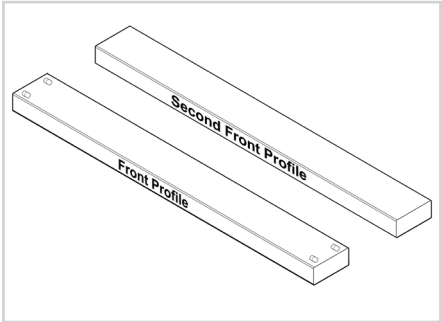

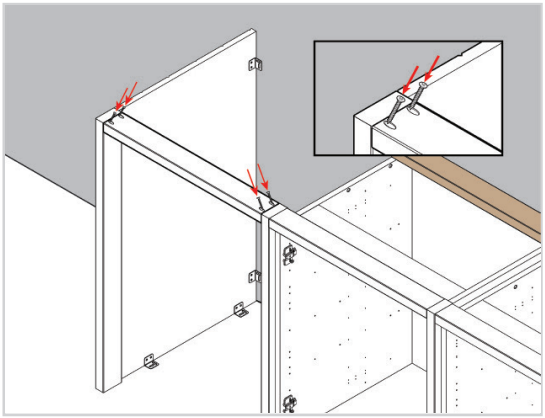

This step is essential, as the dishwasher cannot be fitted without the second profile installed.

Positioning the second profile

Place the second front profile into position underneath the attached front profile. Offset the front of the second profile backwards by **30mm**.

Clamp the profile into position and double check that the offset is correctly set at each end.

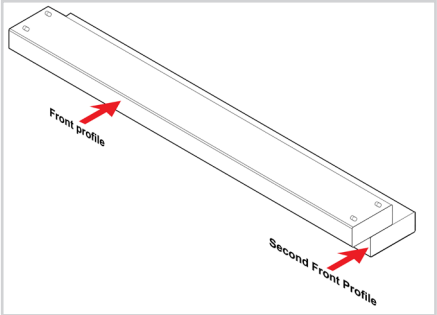

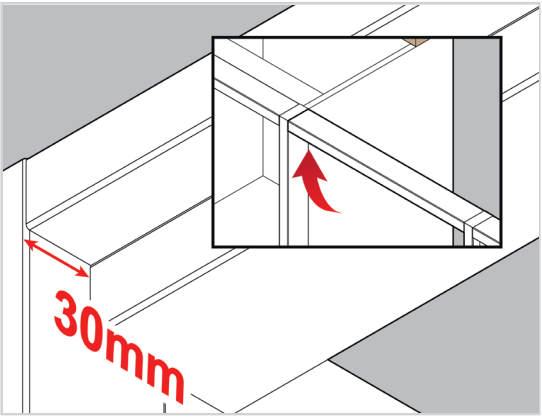

Attaching the second profile

Predrill and countersink **4** equally spaced holes along the top of the front rail. Use **4x45mm** screws to secure the two profile pieces together.

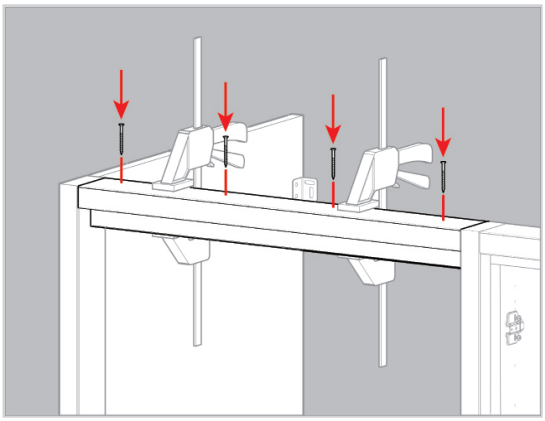

Attaching L brackets to the back profiles

Attach a large L bracket to each end of both of the back profiles using **2x15mm** screws per bracket.

Make sure the L brackets are placed as shown.

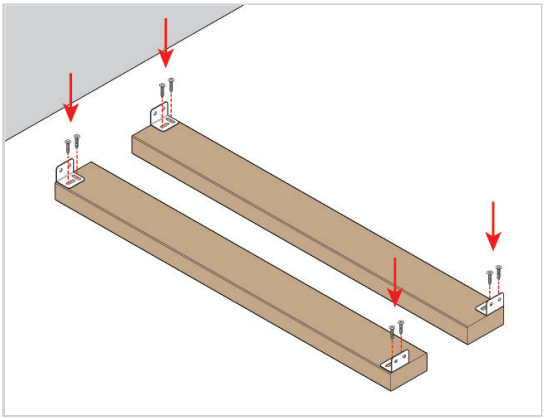

Attaching the profile pieces together

Position the other back profile on top of the first profile, offset by **30mm**. Clamp the two pieces together, making sure the ends are flush and the offset is even at both ends.

Drill **4** equally spaced countersunk holes along the top profile, then attach the two pieces together using **4x45mm** screws.

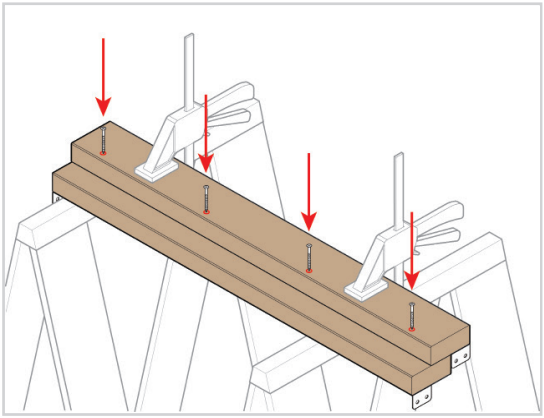

Attaching the back profiles

Use **2x15mm** screws per L bracket to attach the back profiles to the adjacent unit and the inside of the decor panel.

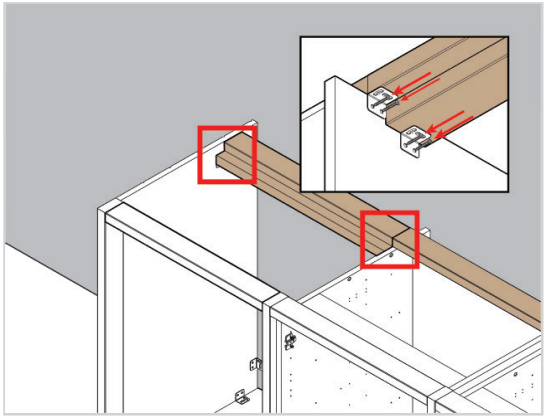

Fixing the offcut

From inside the unit towards the back drill and countersink a hole through the side panel.

Using a **40mm** screw fix a piece of wood to the opposite side of this panel. Make sure the offcut used is the same width as the mid-profile.

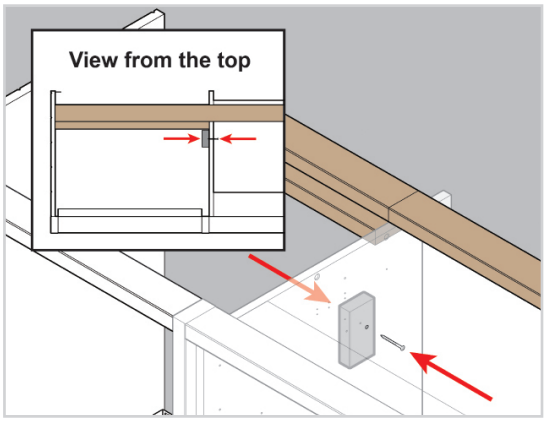

Preparing the frontal

Connect the dishwasher frontal and the **30mm** rail using **2x** connecting plates and 4x15mm screws per plate.

Make sure a **2mm** gap is maintained between the frontal and the rail.

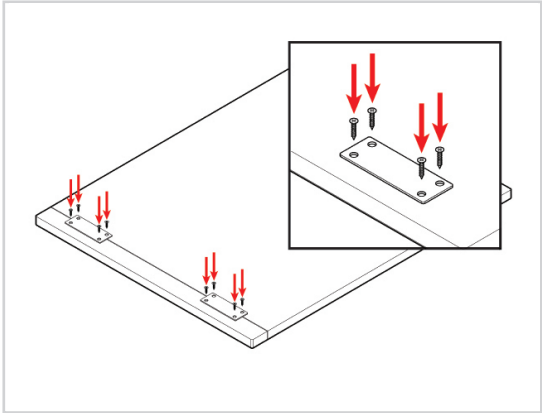

Attaching the handle

To attach the handle to the frontal, please refer to the specific **'Handle'** guide.

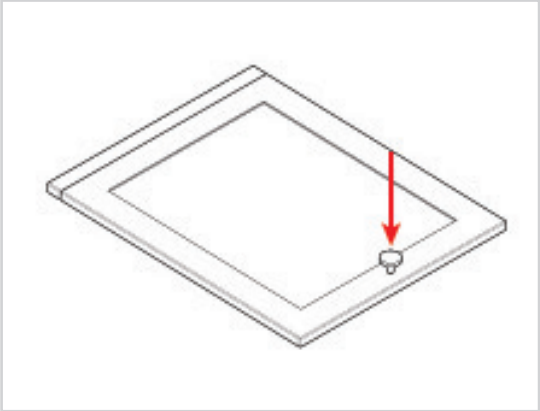

Please see the dishwasher manufacturer's instructions for attaching the frontal and installing the dishwasher.

Finishing touches

Finally, finish off by fitting cover caps over any visible screw heads and cleaning the profiles and units of any dust created during installation.

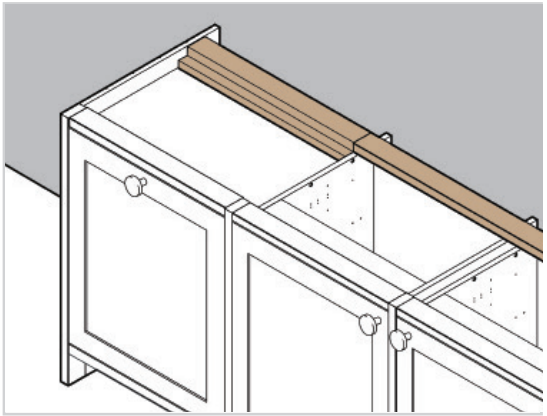

INFINITY PLUS INFRAME

Tower Unit

Profile and Adjacent Unit Fitting Guide

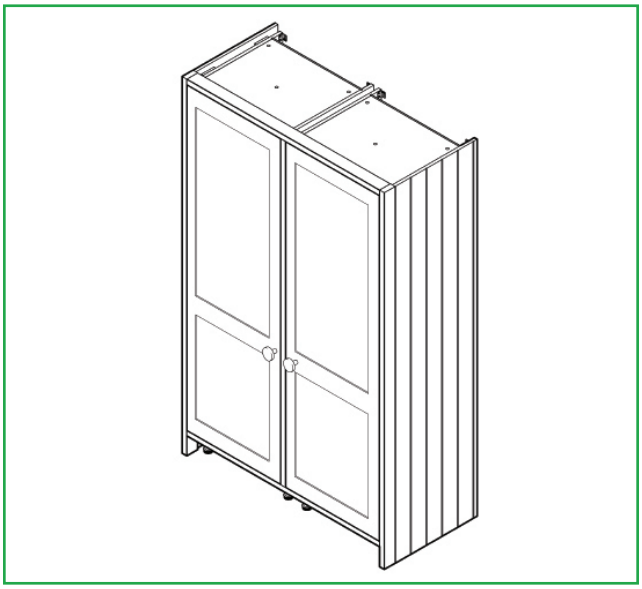

Parts Required

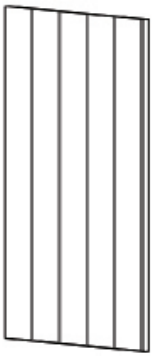

Decor Panel

Profile

Packer

40mm Screws

20mm Screws

Cover Caps

Tools Required

Circular Saw

Chop Saw

Spirit Level

Drill

Screwdriver

Clamps

Sealant

Pencil

Masking Tape

Tape Measure

The tower units should already be built. If not, please refer to the “tower unit” fitting guide before starting this guide.

Remember to take care when unpacking. Please keep your workspace clean, clear, and tidy when working. This will help keep all items safe from damage. Any unneeded cardboard or plastic should be flattened down and placed in the bin.

Removing the frontal

To remove the frontal, pull the release catch at the end of the hinge arm, as shown in the image.

Place the frontals in a door-safe pack until needed again.

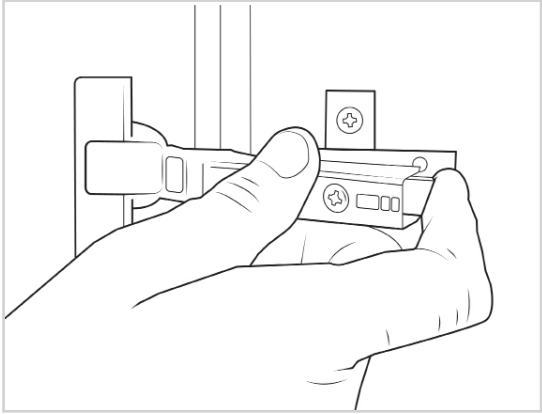

Adjusting the leg height

Make sure the legs are adjusted to **140mm** high and the unit is level.

If necessary, adjust the legs by turning them clockwise or anti-clockwise.

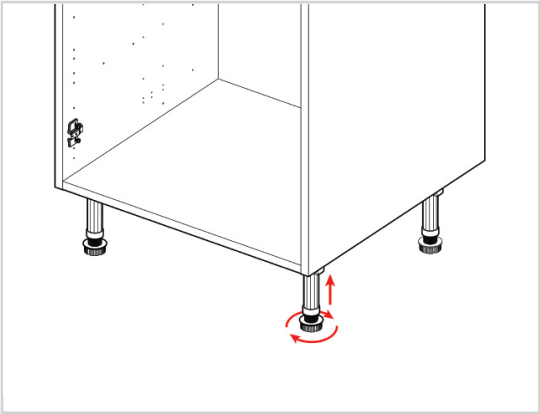

An off-cut piece of profile can be placed on top of the unit to get the additional 30mm needed in the next step.

Finding the measurements for the profiles

End profile:
For the end profile, measure from the floor to the top of the unit **+ 30mm**.

Mid-profile:
For the mid-profile, measure from the bottom of the unit to the top.

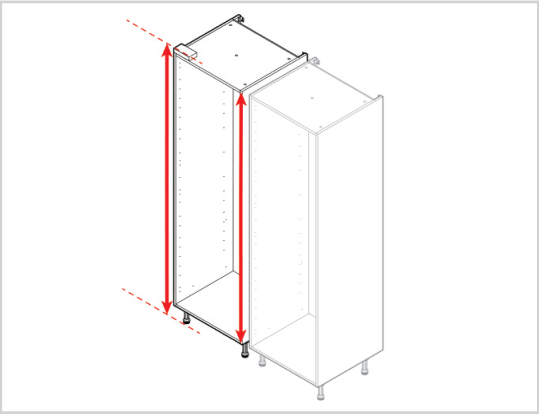

Cutting the profiles

Use a chop saw to cut the mid and end profiles to size.

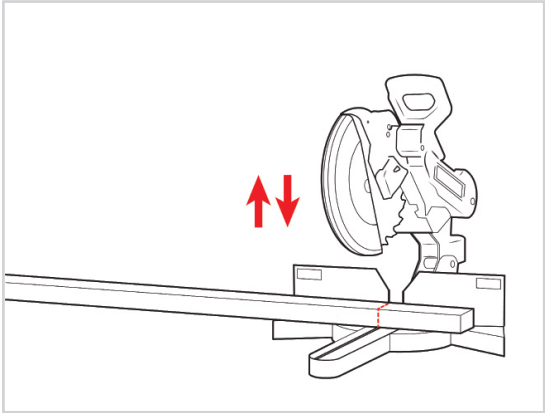

Sealing the profile (If required)

Spread a thin layer of silicone sealant over the cut end of the profile. See the manufacturer's guides for drying times.

Sealing the profile is only required if the cut edge is being placed on the floor.

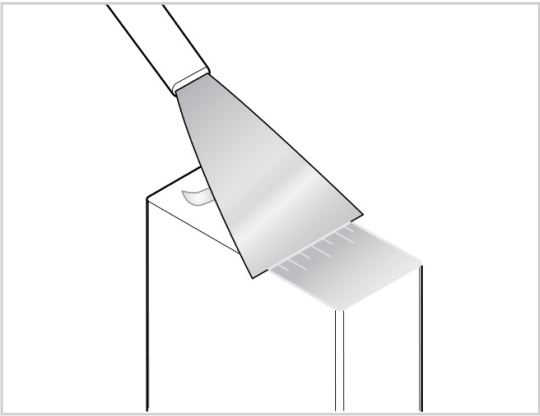

Screws should be placed in front of the hinge plate, where possible. This will help conceal the screw head.

Securing the End Profile

Position the profile against the unit and clamp in place, ensuring the profile is set forward by the **frontal thickness + 2 mm.**

Then drill and countersink **4** holes inside the unit, and secure the profile using **4x40mm** countersunk screws.

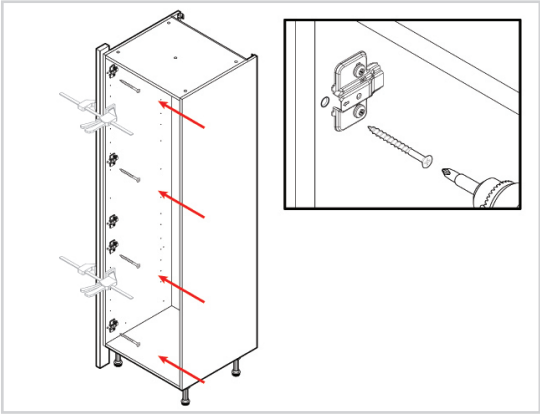

Preparing the packers

Prepare the two packers by cutting them to the unit height.

Then drill and countersink **4** holes along each packer, the first **500mm** from the bottom and the others **500mm** from the previous hole.

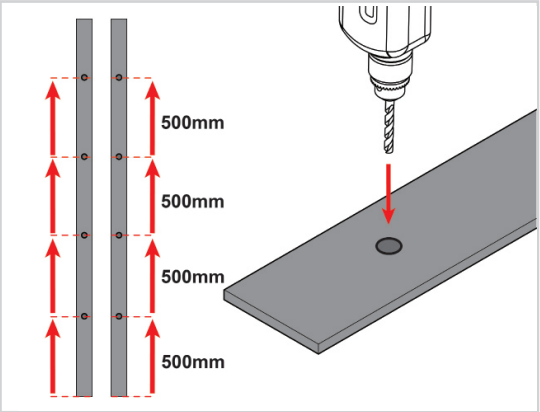

Securing the packers

Secure both packers to the unit using **4x20mm** screws per packer.

Make sure the packers are in line with the top and bottom of the unit and that the screws sit flush with the packer.

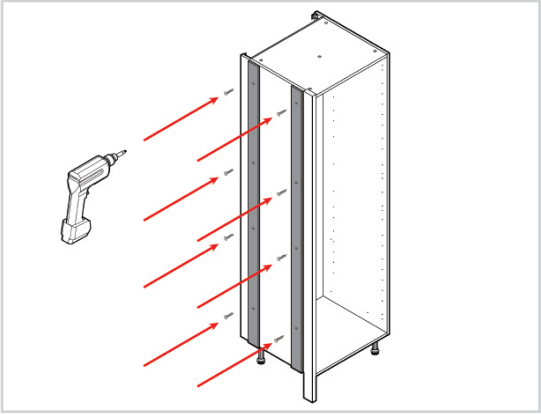

Measuring for the decor panel

For the decor height, measure the height of the unit and add **30mm**.

For the width, measure the distance from the wall to the back edge of the profile.

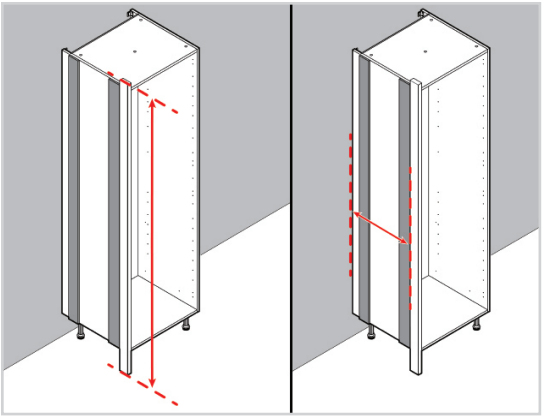

Cutting the decor panel to size

Mark the measurements onto the decor panel using masking tape and a pencil, then use a circular saw to cut the decor panel to size.

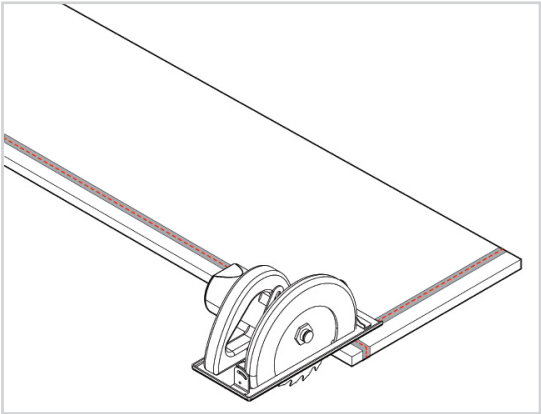

Securing the Decor

Clamp the decor in place with the cut ends facing the top and back.

Drill and countersink **8** holes on the inside of the unit. The holes should line up with the packers and hinge plates, as shown.

Then secure the decor using **4x40mm** countersunk screws down each packer.

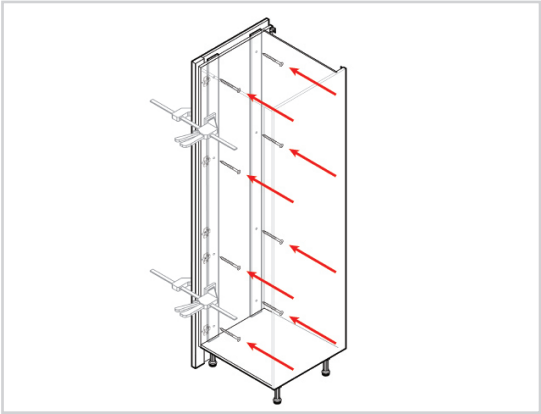

If an additional unit is being added, a mid-profile is required.

Attaching the mid-profile (if required)

Position and clamp the profile, ensuring it sits flush with the top and bottom of the unit and is set forward from the units by the **frontal thickness + 2mm.**

Now, drill and countersink **2** holes on the inside of the unit, and secure the profile using **2x40mm** countersunk screws.

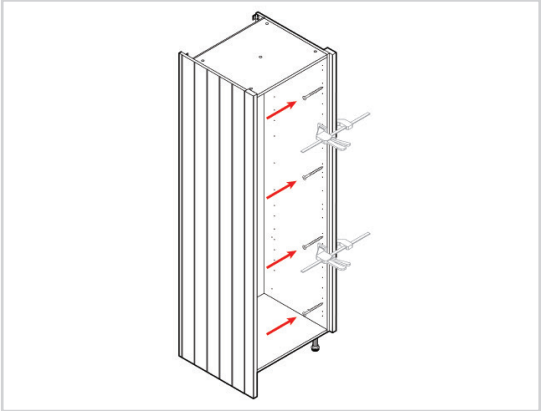

Fixing the offcut between units

From inside the unit towards the back drill and countersink holes through the side panel.

Using **40mm** screws fix pieces of wood to the opposite side of this panel. Make sure the offcuts used are the same width as the mid-profile.

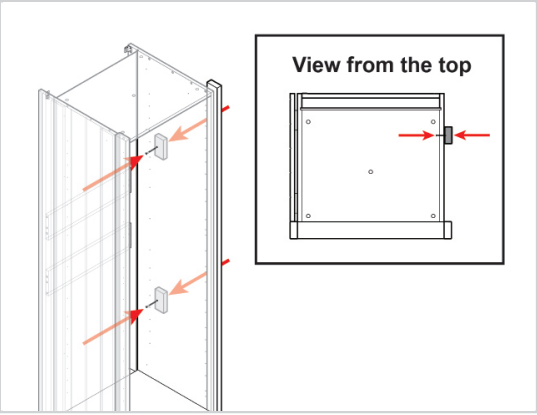

Aligning the additional unit (if required)

Align the next unit alongside the previous unit and mid-profile.

Use a spirit level to make sure the units are level, adjusting the units as required.

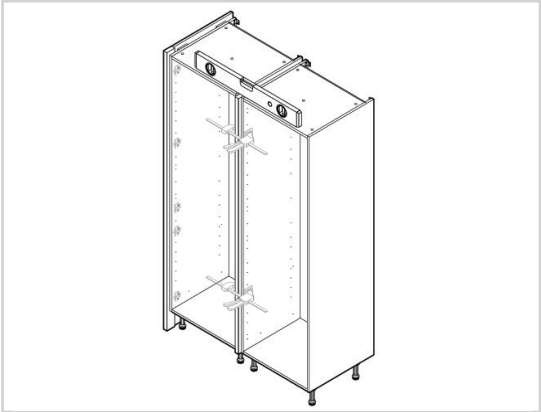

Securing the additional unit

Drill and countersink **4** holes on the inside of the unit, and secure the unit using **4x40mm** countersunk screws.

Make sure that the screws are placed so they will not clash with the screws from the first unit.

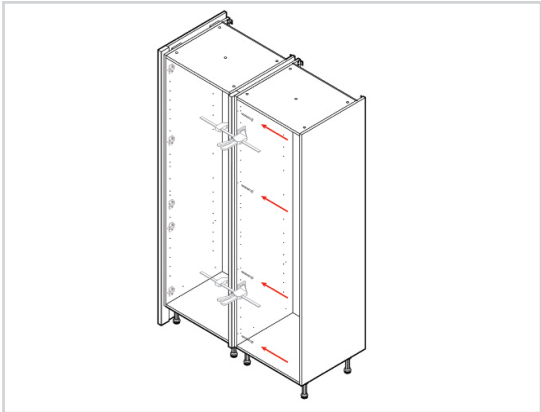

Repeat these steps as required if there are more units on this run.

Finding the measurements for the top and bottom profiles

Measure the distance between the profiles at each end of the run.

Take this measurement at the front top and the front bottom, as shown.

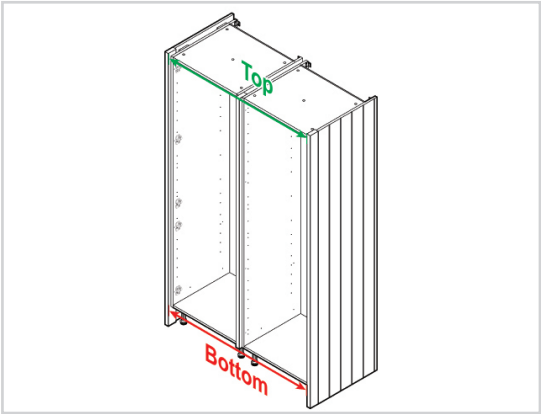

Making a cutting list

Make a cutting list with the measurements taken.

This step will help you avoid mistakes and will allow you to determine the most efficient use of the materials available.

Keep all offcuts as these may be required later.

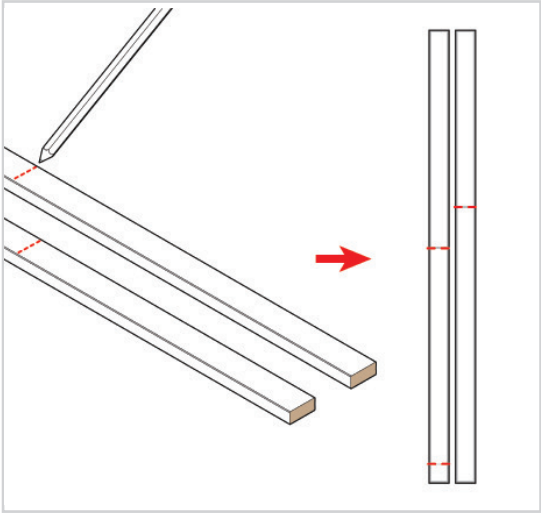

Cutting the profiles

Use a chop saw to cut the top and bottom profiles to size.

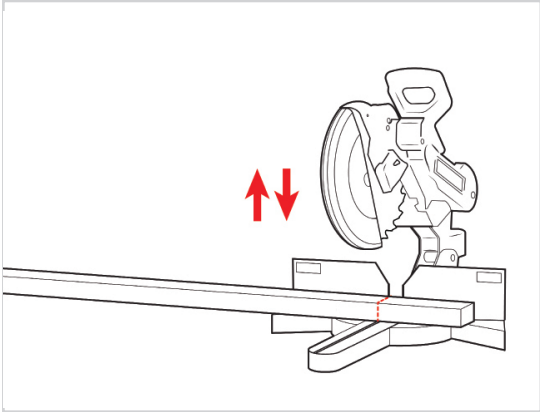

Cutting the bottom profile

Using a circular saw, reduce the depth of the bottom profile from **70mm** to **60mm**, to allow space for the unit legs.

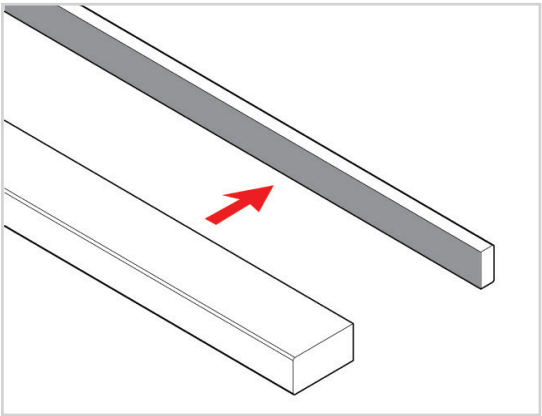

Units 600mm wide or less should have 2 screws along the profile.
Units 650mm wide and above should have 4 screws along the profile.

Securing the bottom profile

Position and clamp the bottom profile in place, making sure the profile is set forward by the **frontal thickness + 2mm.**

Drill and countersink evenly spaced holes along the bottom of the unit, and secure the profile using **40mm** countersunk screws.

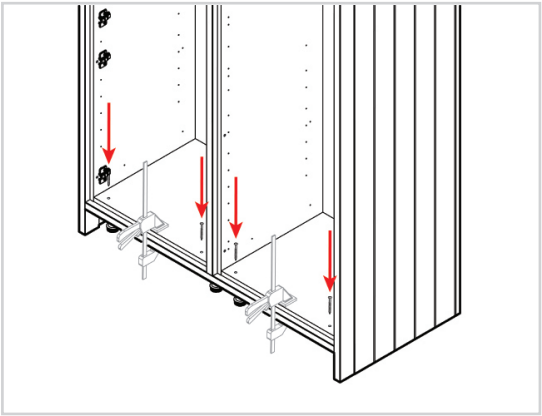

Attaching the frontal

To reattach the frontal, position the hinge arm over the hooks on the hinge plate. Then push the rear of the hinge arm towards the hinge plate until it clicks.

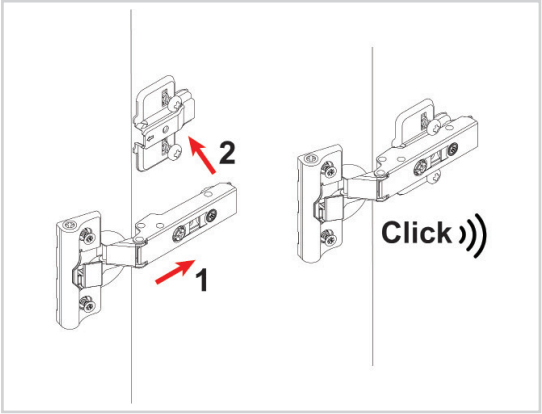

Finishing Touches

Finally, finish off by fitting cover caps over the visible screw heads and cleaning the unit of any dust created during installation.

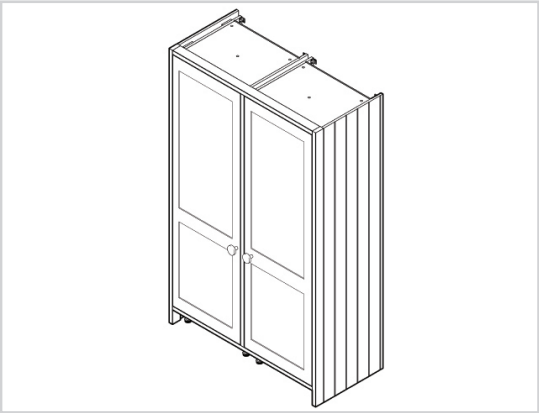

INFINITY PLUS INFRAME

Wall Unit

Profile and Adjacent Unit Fitting Guide

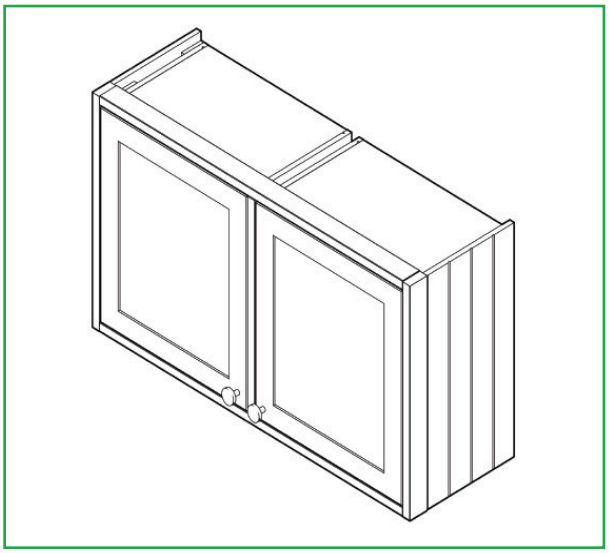

Parts Required

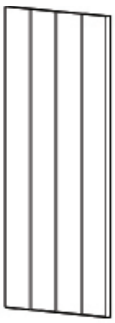

Decor panel

Profile

Packer

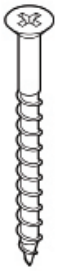

40mm Screws

20mm Screws

Cover Caps

Tools Required

Circular Saw

Chop Saw

Drill

Screwdriver

Clamps

Spirit Level

Pencil

Masking Tape

Tape Measure

The wall units should already be built. If not, please refer to the “wall unit” fitting guide before starting this guide.

Remember to take care when unpacking. Please keep your workspace clean, clear, and tidy when working. This will help keep all items safe from damage. Any unneeded cardboard or plastic should be flattened down and placed in the bin.

Removing the frontal

To remove the frontal, pull the release catch at the end of the hinge arm, as shown in the image.

Place the frontals in a door-safe pack until needed again.

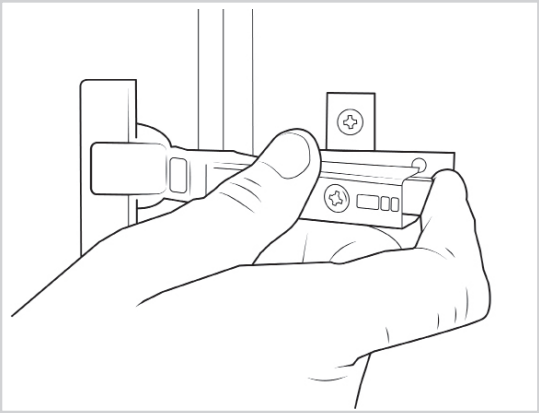

An off-cut piece of profile can be placed on the top and bottom of the unit to get the additional 60mm needed in the next step.

Finding the measurements for the profiles

End profile:
For the end profile, measure from the bottom of the unit to the top of the unit **+60mm** (**30mm** above and below the unit).

Mid-profile:
For the mid-profile, measure from the bottom of the unit to the top.

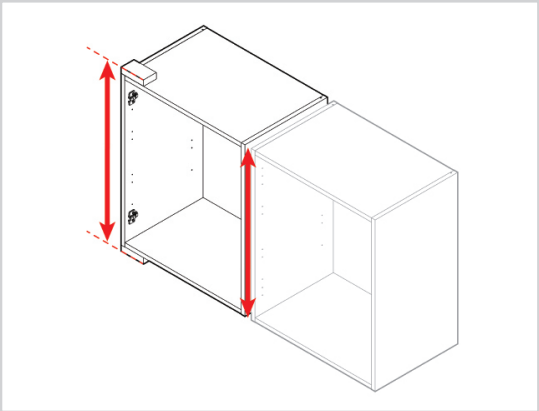

Cutting the profiles to size

Use a chop saw to cut the mid and end profiles to size.

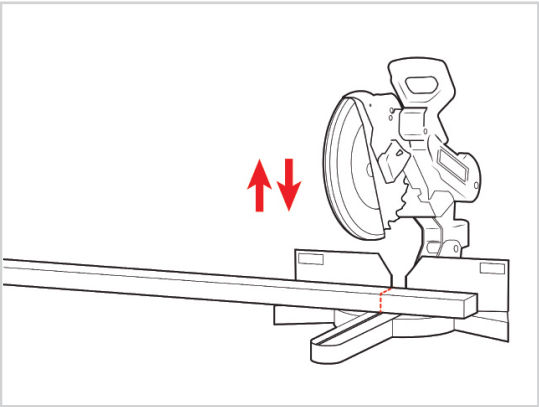

Securing the end profile

Position the end profile against the unit and clamp in place, ensuring the profile is set forward by the **frontal thickness + 2 mm.**

Then drill and countersink **2** holes inside the unit, and secure the profile using **2x40mm** countersunk screws.

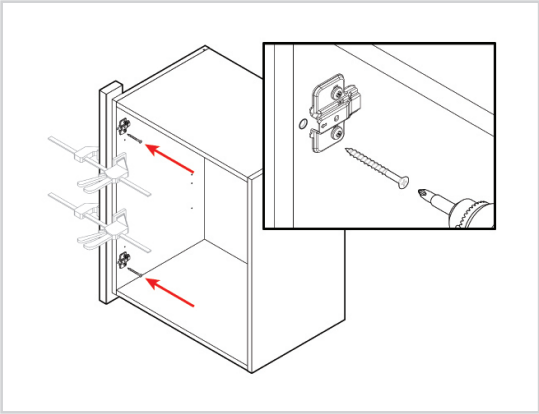

Screws should be placed in front of the hinge plate, where possible. This will help to conceal the screw heads.

Preparing the packers

Prepare the two packers by drilling and countersinking a hole at each end of each packer piece.

The holes should be created 50mm from the packer ends, as shown.

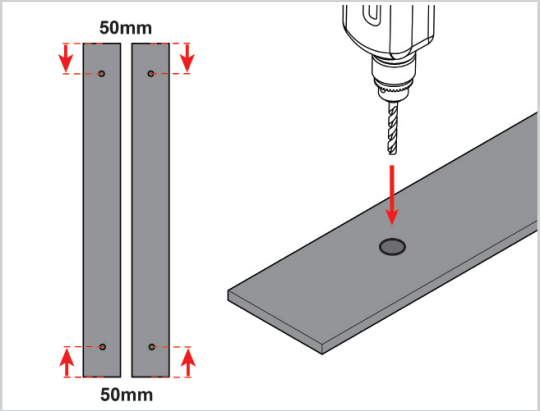

Securing the packers

Secure both packers to the unit using **2x20mm** countersunk screws per packer.

Make sure the screws sit flush with the packer.

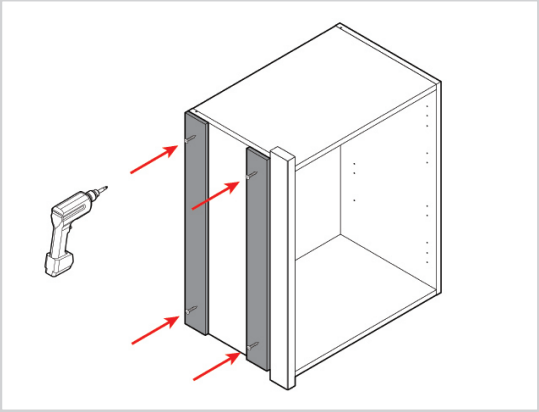

Measuring for the decor panel

For the decor height, measure the height of the unit and add **60mm** (**30mm** above and below the unit).

For the width, measure the distance from the wall to the back edge of the profile.

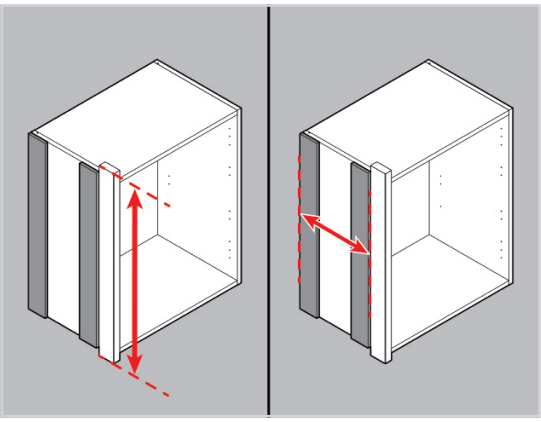

Cutting the decor panel to size

Mark the measurements onto the decor panel using masking tape and a pencil, then use a circular saw to cut the decor panel to size.

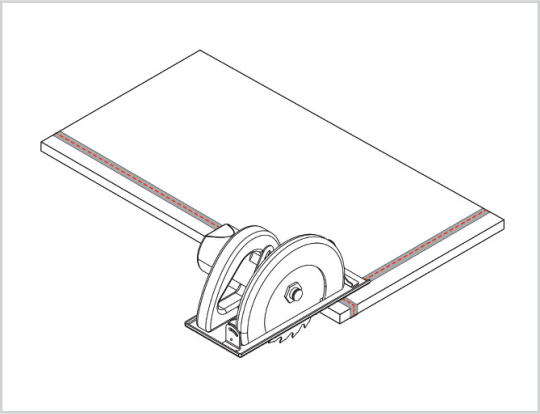

Securing the decor

Clamp the decor against the side of the unit with the cut edges facing upwards and towards the back.

Use **4x40mm** countersunk screws on the inside of the unit, as shown.

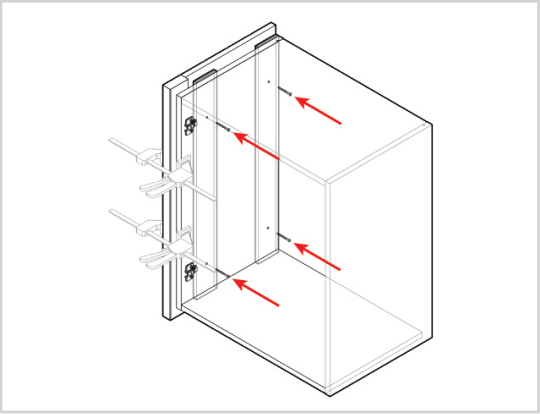

If an additional unit is being added, a mid-profile is required.

Attaching the Mid-Profile (if required)

Clamp the profile in place, ensuring it sits flush with the top and bottom of the unit and is set forward from the unit by the **frontal thickness + 2mm.**

Then, drill and countersink **2** holes on the inside of the unit, and secure the profile using **2x40mm** countersunk screws.

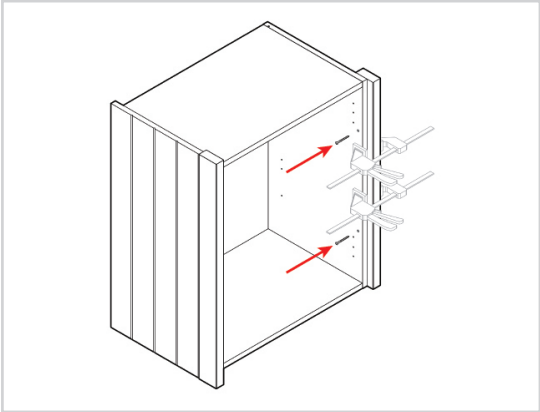

Aligning additional units (if required):

Align the additional unit with the mid-profile and first unit.

Use a spirit level to make sure the units are level, then clamp the units together.

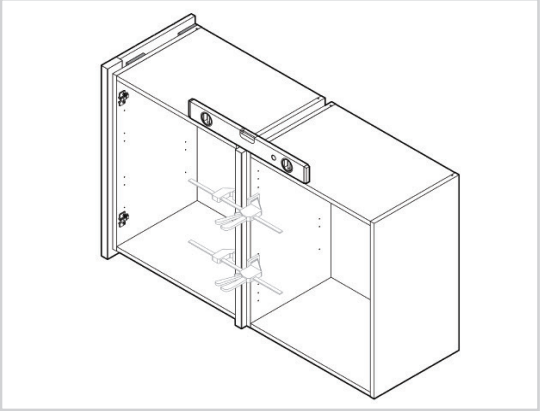

Securing the units

Now, drill and countersink **2** holes on the inside of the unit, and secure the profile using **2x40mm** countersunk screws.

Please ensure the screws do not clash with the screws already installed.

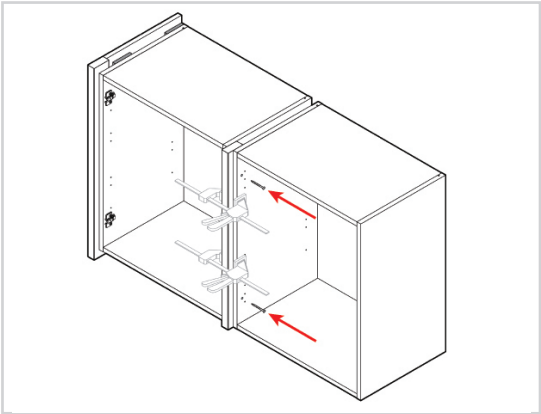

Repeat these steps as required. If there are more units on this run.

Finding the measurements for the top and bottom profiles

Measure the distance between the profiles at each end of the run.

Take this measurement at the top and the bottom of the unit, as shown.

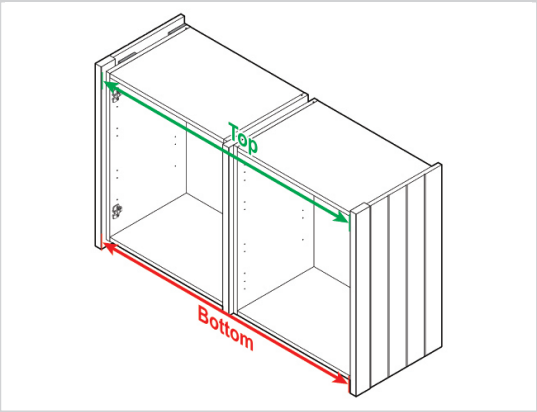

Making a cutting list

Make a cutting list with the measurements taken.

This step will help you avoid mistakes and will allow you to determine the most efficient use of the materials available.

Keep all offcuts as these may be required later.

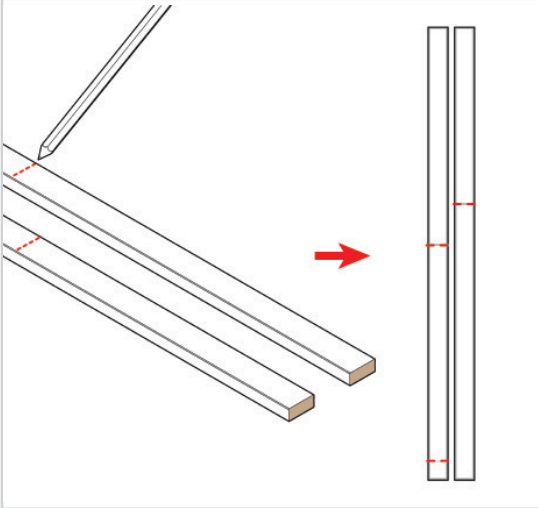

Cutting the profiles

Use a chop saw to cut the top and bottom profiles to size.

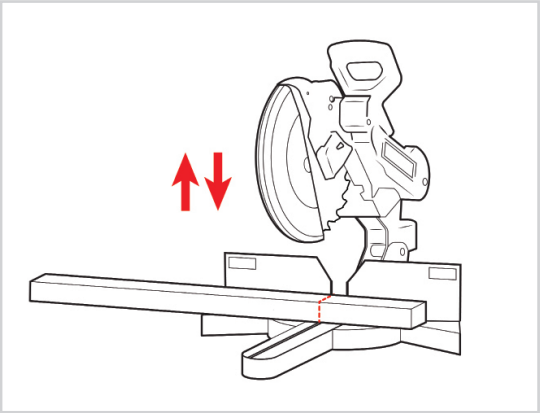

Fixing the offcut between units

From inside the unit towards the back drill and countersink a hole through the side panel.

Using a **40mm** screw fix a piece of wood to the opposite side of this panel. Make sure the offcut used is the same width as the mid-profile.

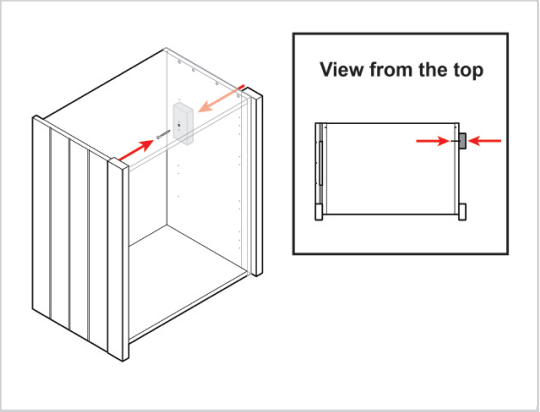

Units 600mm wide or less should have 2 screws along the profile.
Units 650mm wide or above should have 4 screws along the profile.

Securing the bottom profile

Drill and countersink evenly spaced holes along the bottom of the profile.

Then position and clamp the profile in place. Ensuring the profile sits the **thickness of the frontal + 2mm** forward from the unit.

Secure using **40mm** countersunk screws.

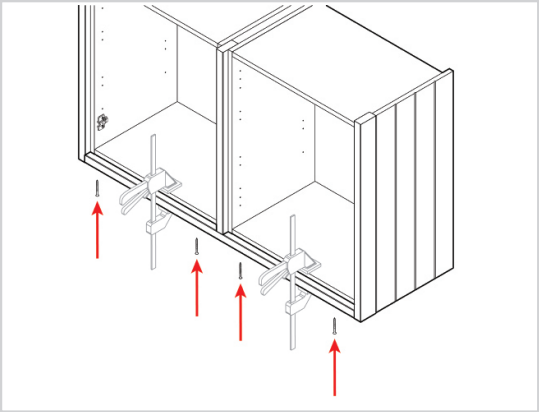

Units 600mm wide or less should have 2 screws along the profile.
Units 650mm wide or above should have 4 screws along the profile.

Securing the top profiles

Drill and countersink evenly spaced holes along the top profile.

Position the profile on top of the unit, ensuring it sits forward of the unit by the **thickness of the frontal + 2mm.**

To secure the profile, use **40mm** countersunk screws.

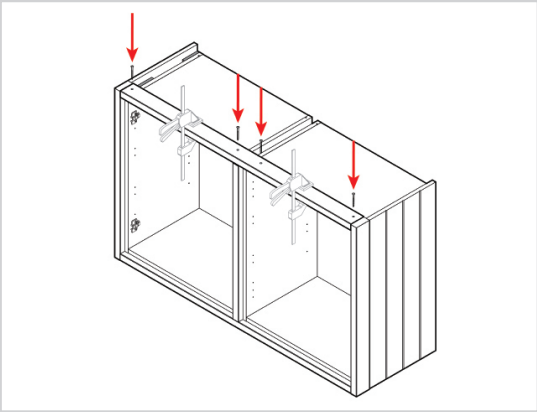

Attaching the frontal

To reattach the frontral, position the hinge arm on the hooks on the hinge plate.

Then push the rear of the hinge arm towards the hinge plate until it clicks.

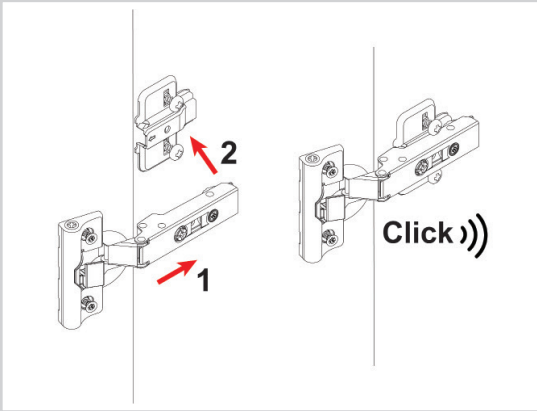

Finishing Touches
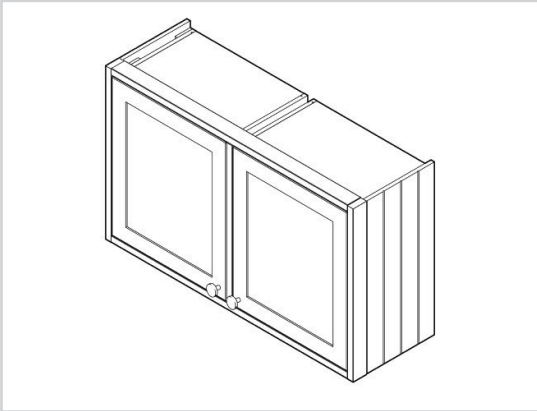
Finally, finish off by fitting cover caps over the visible screw heads and cleaning the unit of any dust created during installation.