Pelmet

Pelmet, Traditional Butted, Mitred and Curved - Fitting Guide

Check the design choices of the kitchen, as the decor panel sizes are determined by whether the pelmet is mitred or butted.

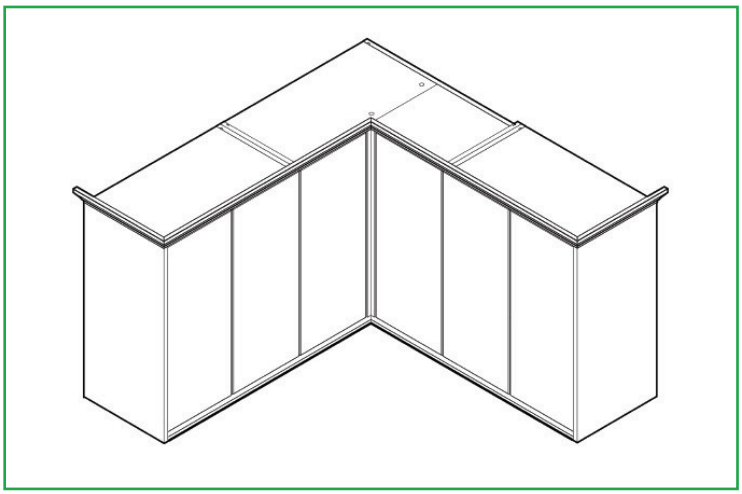

Parts Required

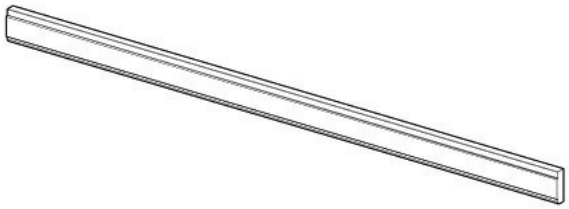

Pelmet

Small
L Brackets

15mm
Screws

Tools Required

Drill

Screwdriver

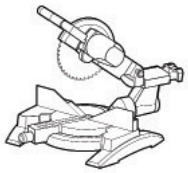

Mitre Saw

Glue

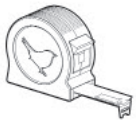

Tape Measure

Remember to take care when unpacking. Please keep your workspace clean, clear and tidy when working. This will help keep all items safe from any damage. Any un-needed cardboard or plastic should be flattened down and placed in the bin.

Internal and external corners

Please see the diagrams showing the different joint types

A - **External mitre**

B - **Internal mitre**

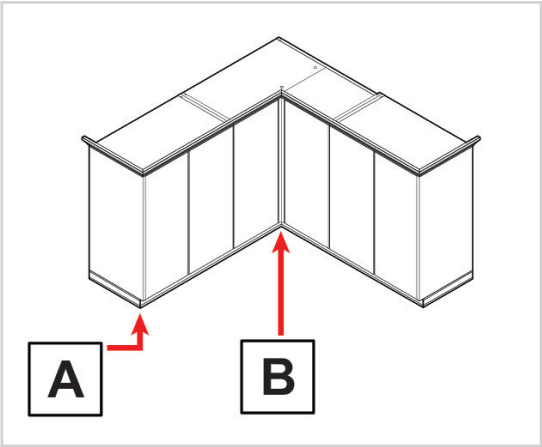

Finding the pelmet measurement

The measurements of the pelmet will vary depending on how it is butted or mitred. This will be specified in the kitchen plan.

A - **Wall to wall (butted fit)**- Find the measurement of the run by measuring the distance between the **2** walls.

B - **Wall to internal mitre -** Find the measurement of the run by measuring the distance between the wall and the front carcase edge of the adjoining run.

C - **Wall to external mitre -** Find the measurement of the run by measuring the distance between the wall and the front edge of the unit carcase.

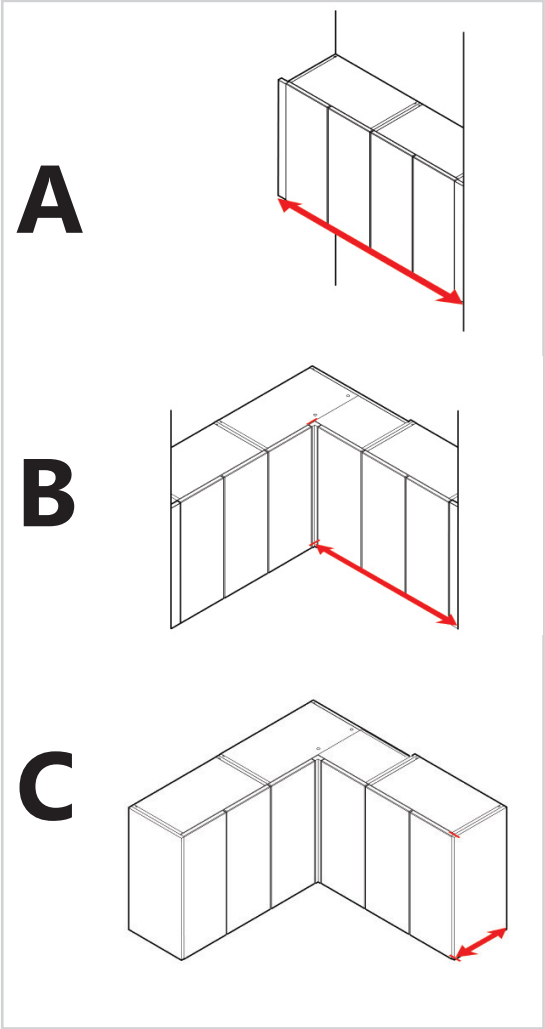

D **- Internal mitre to Decor -** Find the measurement of the run by measuring the distance between the internal corner and inner side of the decor panel.

E **- Internal mitre to external mitre -** Find the measurement of the run by measuring the distance between the internal corner and far edge of the run.

F - **Internal mitre to Internal mitre -** Find the measurement of the run by measuring the distance between the internal carcase corners at each end of the run.

G **- External mitre to external mitre -** Find the measurement of the run by measuring the distance between the **2** external edges.

H - **Decor to decor (butted fit) -** Find the measurement of the run by measuring the distance between the inner sides of the decor panels.

I - **Curved unit** - Find the length of the curved pelmet by measuring the curved edge of the unit from edge to edge as shown in the diagram.

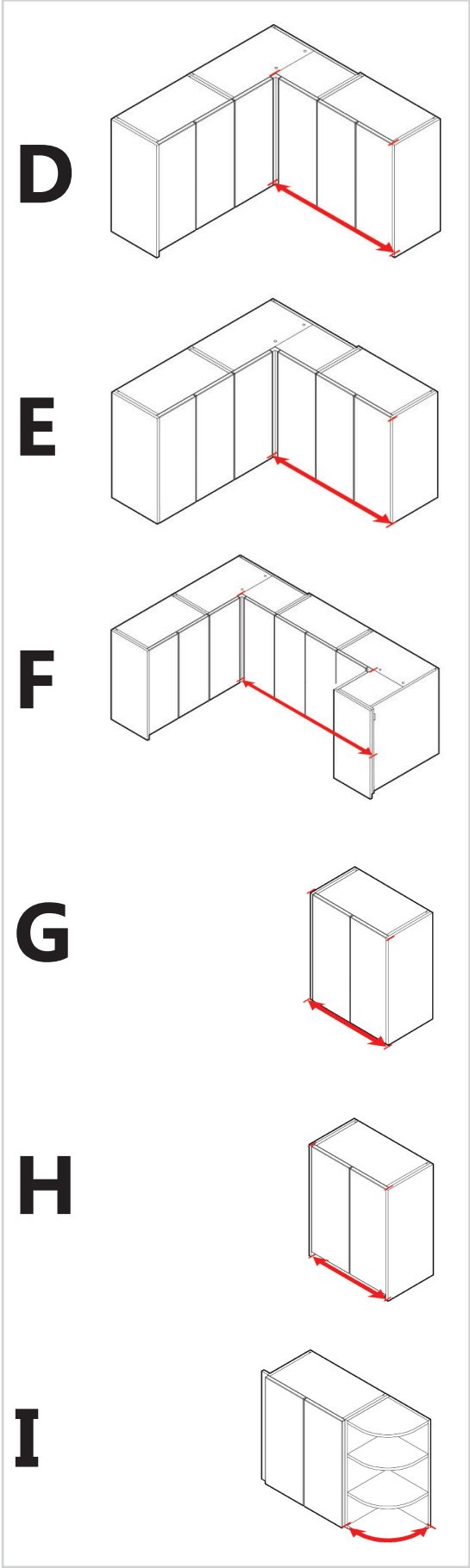

If attaching the pelmet to a wall, allow extra length in case the wall isn't straight.

Creating a cutting list

Make a cutting list of the pieces required. Plan how you will get the pieces from the lengths of pelmet you have.

This step will help you avoid mistakes and will allow you to determine the most efficient use of the materials available.

Mark the measurements obtained on the top flat plane of the pelmet.

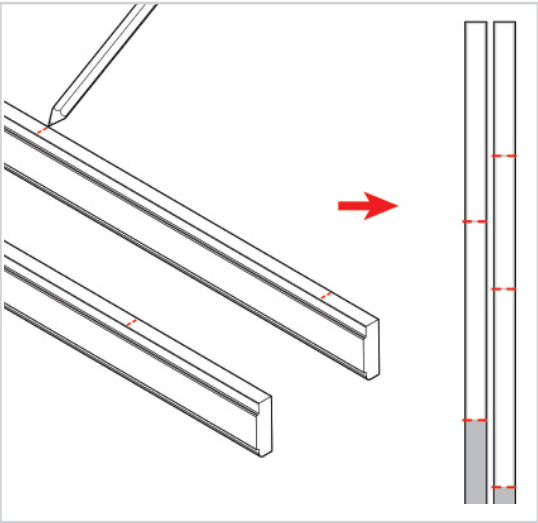

Ensure you add an additional 100mm per mitre. This will ensure you have enough material for any cut you make.

Cutting the pelmet

Straight cut -
Set the saw to a **90 degree angle** and position the pelmet on the saw making sure the flat rear face of the pelmet is facing away from you.

Mitre cut -
Set the saw to a **45 degree angle** and position the pelmet on the saw making sure the flat rear face of the pelmet is facing away from you.

Make a practice cut close to the marked measurement before you make the final cut. This will help to ensure the pelmet is cut correctly.

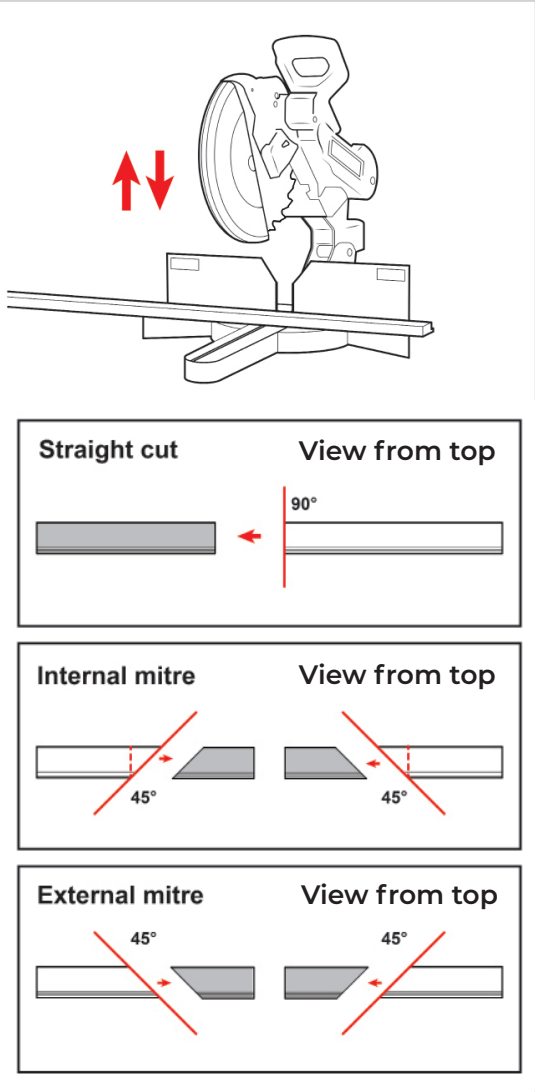

Attaching the L-brackets

Fix the L-brackets on the back of the pelmet in the postion shown in the diagram.

Ensure these are placed next to the flat top edge on the back of the pelmet.

Use **2x15mm** screws per L-bracket. There should be a minimum of **3x** L-brackets per **1** metre of pelmet and at least 2 per piece.

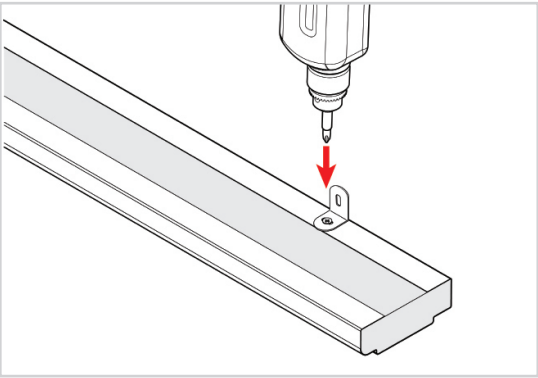

Glueing the pieces together

Use the mitre pen and glue to fix the **2** mitred pieces of pelmet together.

Step 1 -

Apply the mitre pen to one side of the cut edges of the cornice.

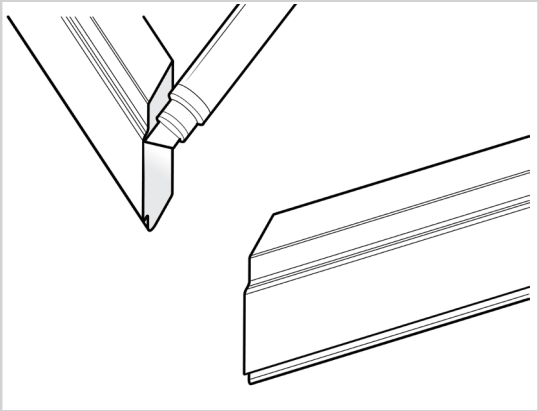

Step 2 -

Apply mitre glue to the oppsite cut edge of the mitred pieces then stick them together ensuring the edges are flush for a neat finish.

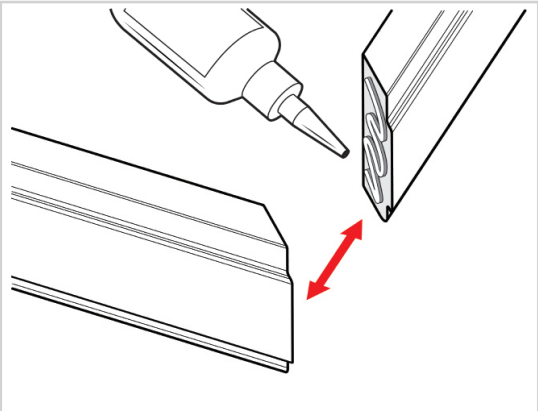

Positioning the pelmet

Hold the pelmet in position underneath the wall units. Ensure the front of the pelmet is in line with the front edge of the units as shown in the diagram.

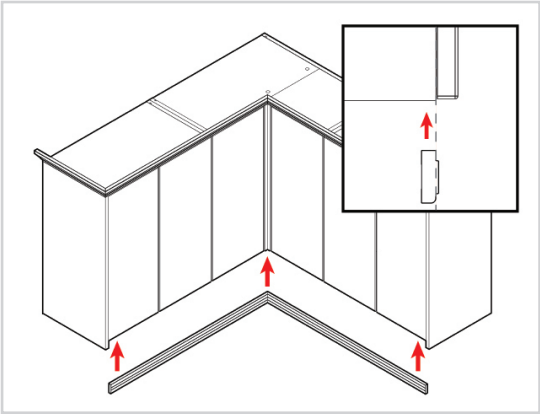

Securing the pelmet to the unit

Screw through the L-bracket into the underside of the wall units with **1x15mm** screw per L- bracket.

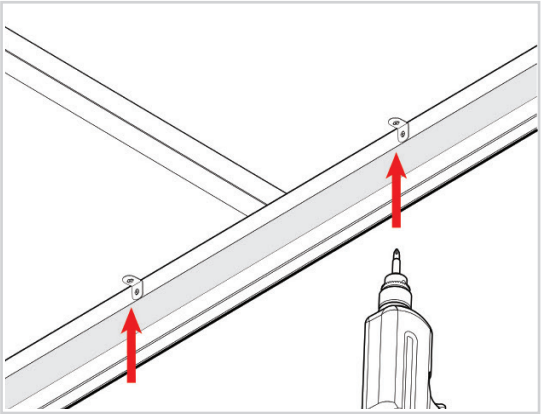

Apply soft wax to any joints where an unfinished edge is visible on the pelmet, particularly on lighter-coloured finishes, as the exposed edges tend to be more noticeable.

Applying the soft wax

Use the soft wax and apply to the pelmet join.

Apply in a side to side motion across the join working your way down. Ensure the join is fully covered with the soft wax.

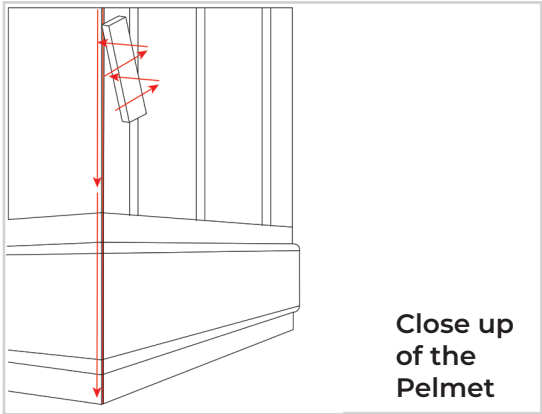

Shaping the soft wax

Take the soft wax applicator and gently shave down each side of the pelmet join on each side.

Keep the applicator flat to scrape away any excess wax. The applicator should wiped clean after each stroke.

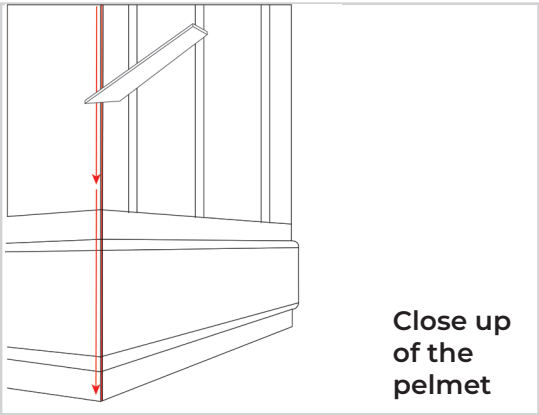

Cleaning the excess wax

Gently wipe the pelmet with the abrasive sponge provide.

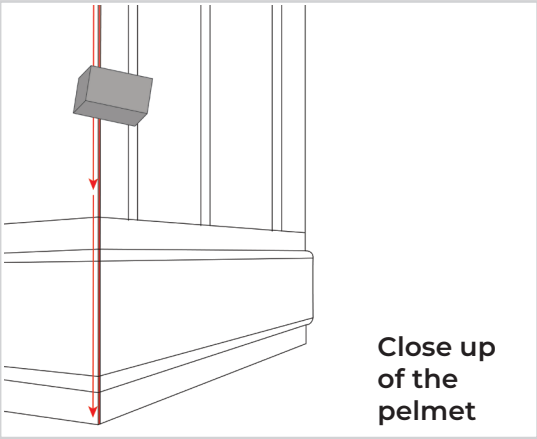

Cleaning the units
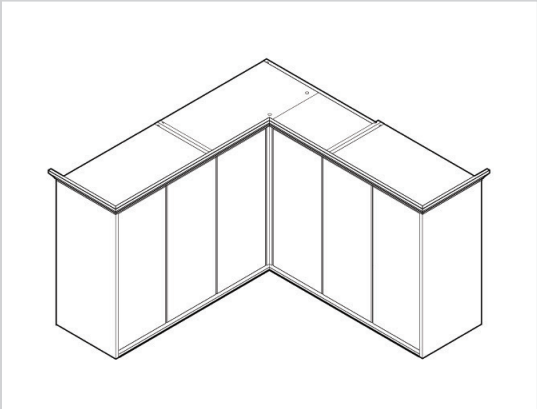
Once the pelmet is secured. The units should be thoroughly cleaned to remove any debris that may have accumulated during the installation.