Milano Profile

Milano End Profile, Fitting Guide

Page 1 Fitting End Profile to a Unit/Decor Panel

Page 10 Fitting End Profile to a Unit/Filler

Fitting End Profile to a Unit/Decor Panel

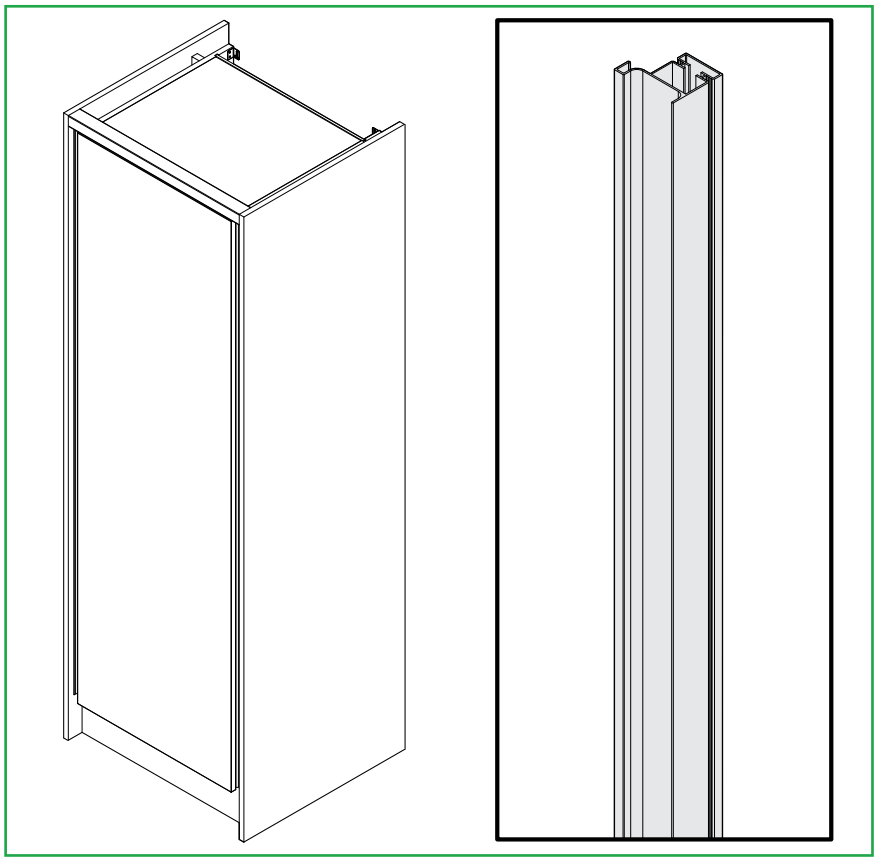

Parts Required

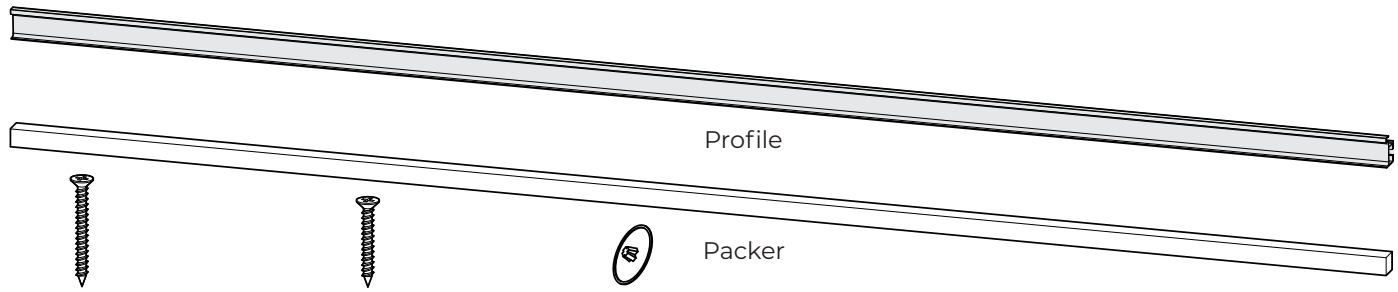

40mm Screws (not supplied)

30mm Screws (not supplied)

Cover Caps (supplied with unit)

Tools Required

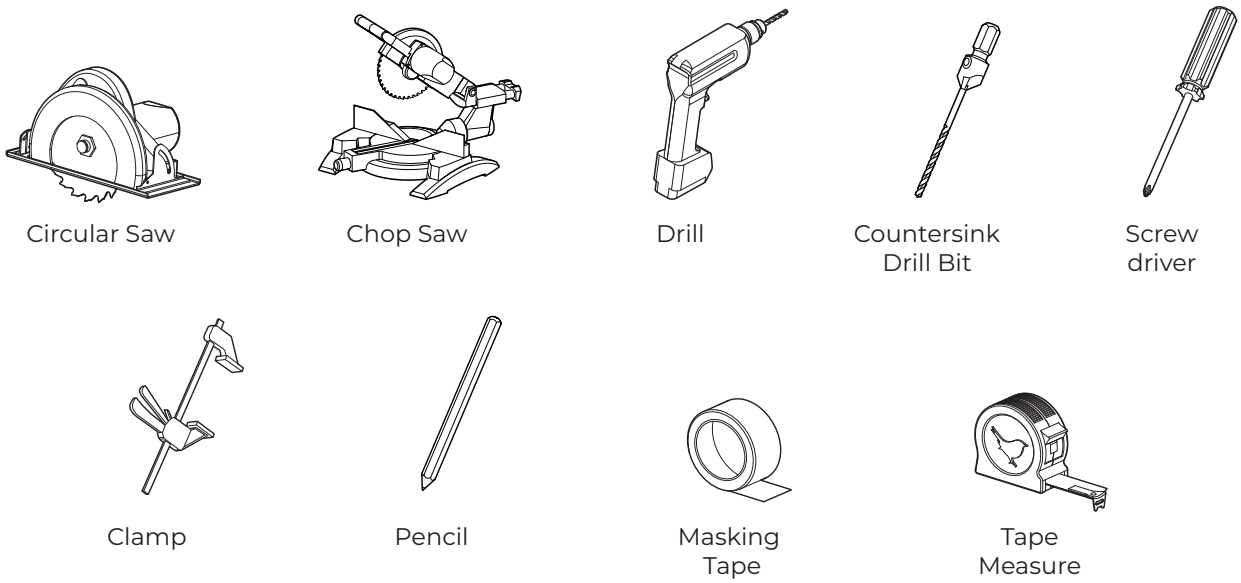

Remember to take care when unpacking. Please keep your workspace clean, clear and tidy when working. This will help keep all items safe from any damage. Any un-needed cardboard or plastic should be flattened down and placed in the bin.

Removing the frontal

Remove the frontal from the tower unit by pulling the release catch.

Remove any shelves and fixings from within the unit and put in a safe place.

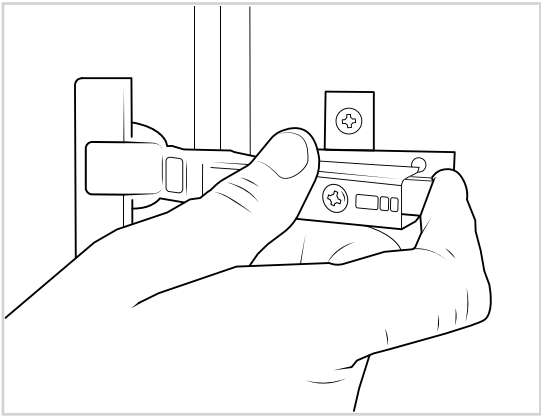

Finding the length of the profile and packer

To find the length of the profile and packer measure the height of the tower unit.

The profile and packer will sit in line with the underside and top of the unit as shown.

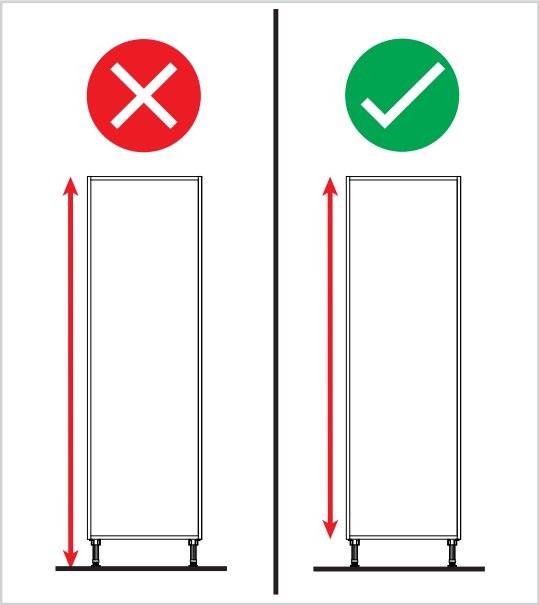

Marking the profile and packer measurements

Apply masking tape to the profile and packer. Using a pencil, mark the measurement obtained.

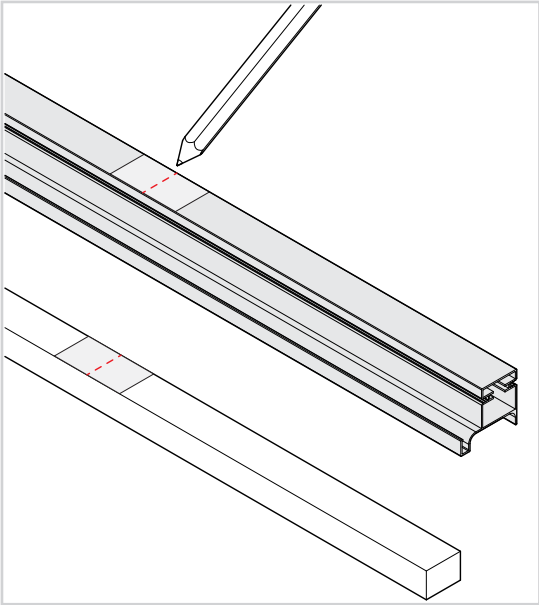

Cutting the profile and packer

Using a chop saw, line up the marked measurement and cut the profile and packer to size.

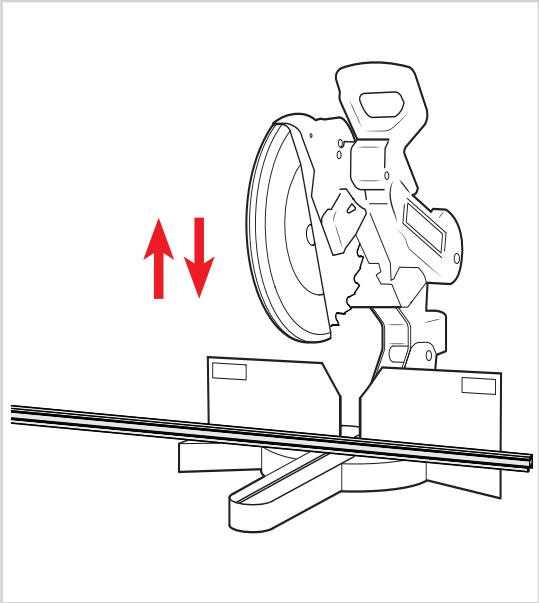

Find the decor panel measurements and cut to size (if required)

Find the height and depth of the decor panel and cut to size using a circular saw.

For more details on finding the correct measurements for the tower unit decor panel please review the '**Tower decor panel - fitting guide**'.

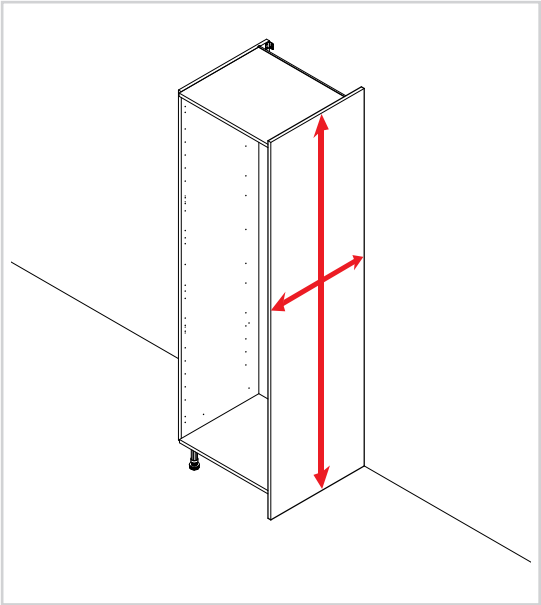

Clamping the decor panel

Clamp the decor panel to the side of the unit.

For more details on finding the correct positioning for tower unit decor panels please review the '**Tower decor panel - fitting guide**'.

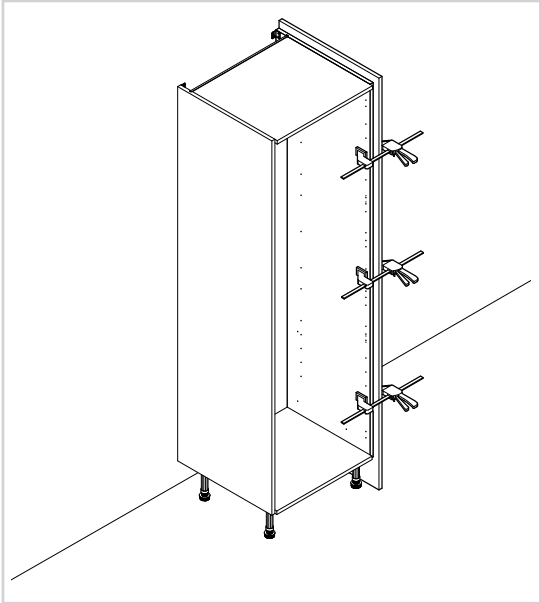

Marking the profile position

Use a pencil to lightly mark the points where the decor panel meets the top, bottom and front edges of the unit. This will indicate where the profile needs to be fixed to the decor panel.

Mark the positions of any hinge plates using masking tape and a pencil if applicable. This is to prevent screws clashing at a later stage.

Once marked remove the clamps and place the decor panel on an even surface with the marked side facing up.

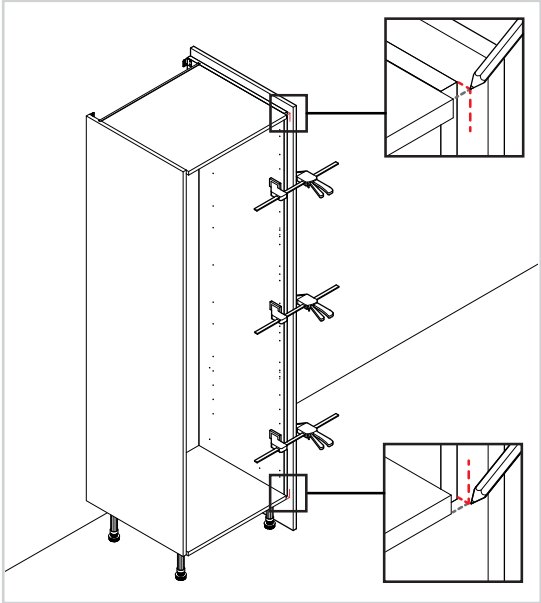

Please be aware, when securing the profile to the decor, screws appropriate for metal are required.

Fixing the profile to the decor panel

Align the profile to sit within the markings made. Position the flat edge of the profile against the decor and secure it in place with clamps.

Once secured, pre-drill **4** evenly spaced holes into the profile making sure to avoid any hinge plate locations if marked. Refer to the diagram for positioning.

Use **4x40mm** screws through the pre-drilled holes to fix the profile to the decor panel.

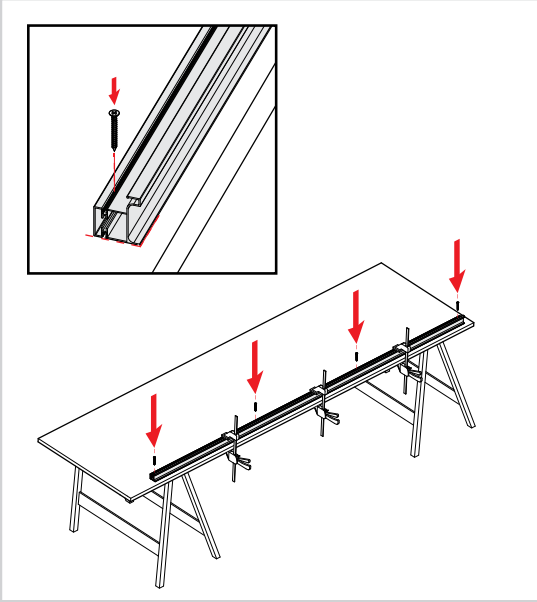

Measuring the packer postion

From inside the unit drill **4** holes aligned vertically through the side panel.

Drill the holes towards the rear of the unit in front of the back panels. Any screw heads can be hidden by positioning these holes behind shelf sides where possible.

From the outer side of the unit measure the distance between the drilled holes and rear wall.

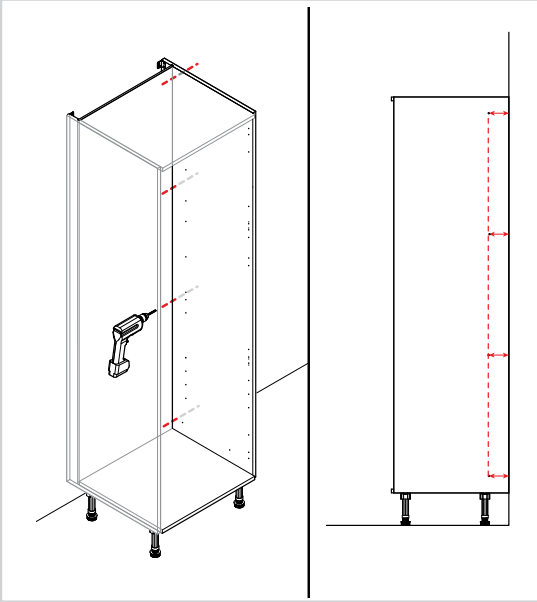

Marking the packer postion

Using a pencil, lightly mark the obtained measurements on to the decor panel. Draw a straight line through these points to mark the central packer position.

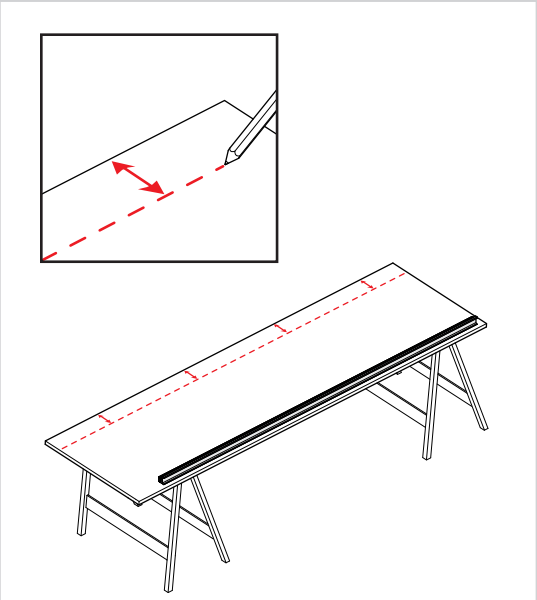

Positioning the packer on the decor panel.

Make sure the packer is placed with the **shortest** side against the decor panel as shown in the diagram.

This will allow the packer to sit flush with the rear profile section and prevent the screws from going through the decor panel.

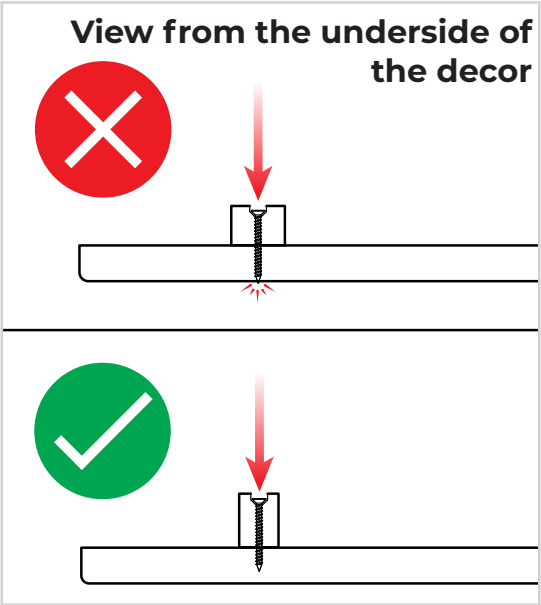

Clamping the packer to the decor panel

Align the packer to sit centrally over the marked line and in line with the top and bottom of the attached profile.
Secure the packer to the panel using clamps.

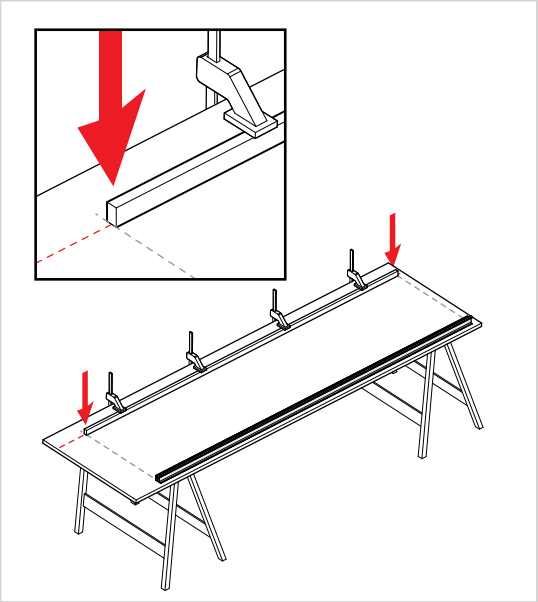

Fixing the packer to the decor panel

Once secured to the panel drill and countersink **5** equally spaced holes along the packer.

Insert **1x40mm** screw into each hole and tighten.

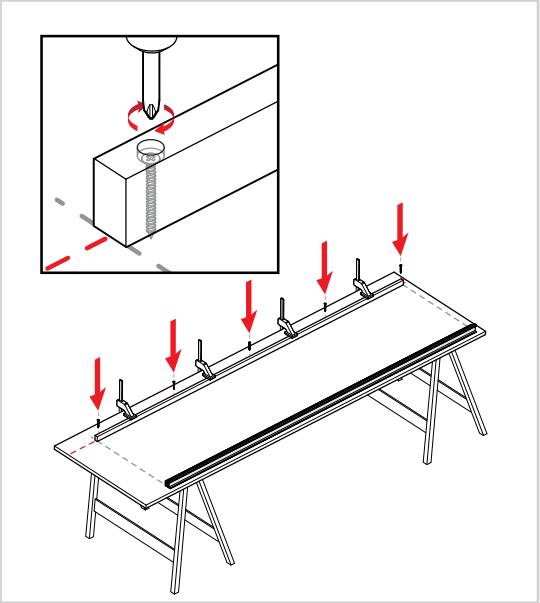

Clamping the decor to the unit

With the packer and profile attached, fix the decor panel to the side of the unit with clamps.

Ensure the front section of the profile rail sits flush with the top, bottom and front edges of the unit.

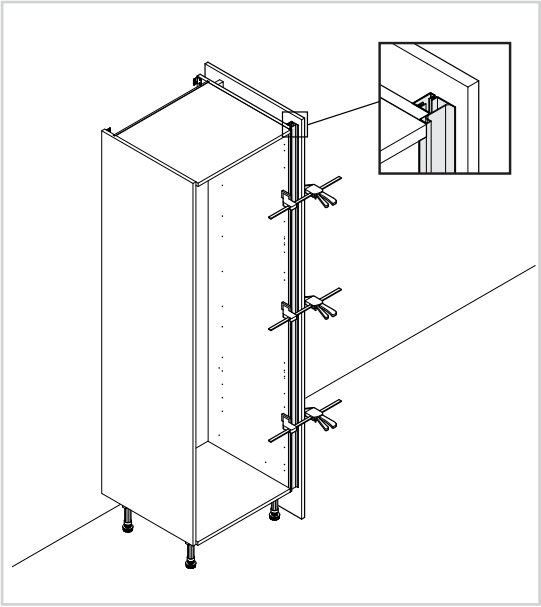

When securing the profile to the unit, screws appropriate for metal are required.

Where an appliance housing is fixed, the screws should be situated behind the appliance.

Marking the screw positions (profile)

Place low adhesive masking tape to the inner side of the unit near the front edge.

In **4** evenly spaced positions measure **32mm** from the front of the profile into the unit and mark where the screws will be placed with a pencil.

Where possible position the holes behind shelves and hinge plates to conceal any screw heads.

These markings will represent where the screws will be fixed.

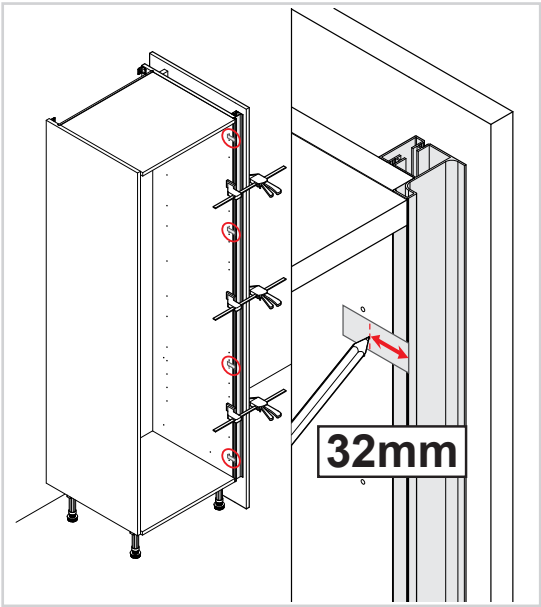

Fixing the decor panel to the unit (profile)

Pre-drill a hole in each of the marked positions and remove the masking tape.

Use **4x40mm** screws into the pre-drilled holes to fix the profile and decor panel to the front of the unit.

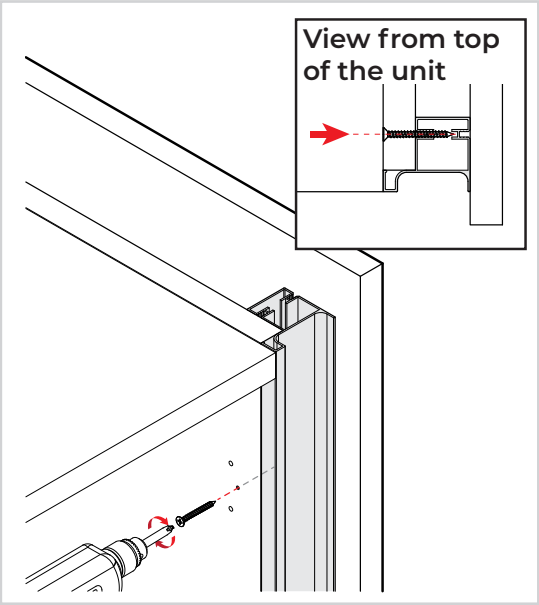

Fixing the decor panel to the unit (packer)

To fix the packer to the unit fix **1x30mm** screw into each of the **4** holes previously drilled at the back of the unit.

Once the screws are in place remove the clamps and add cover caps where necessary to hide any visible screw heads.

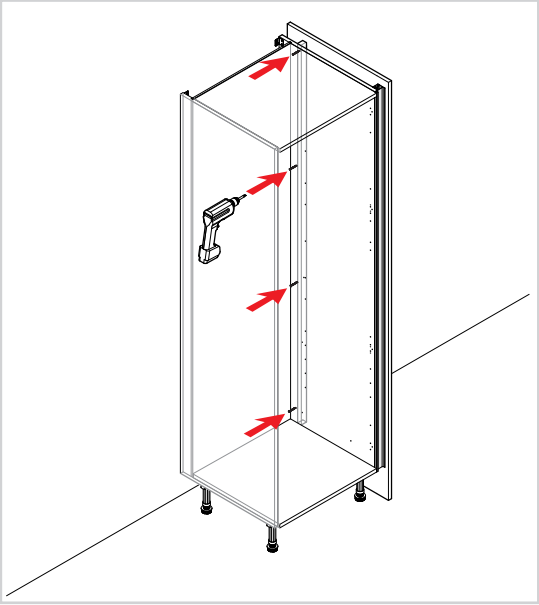

Attaching the frontal

The frontal should be re-attached to the unit by clipping the hinges onto the hinge plates. The bar of the hinge needs to be positioned into the hooks on the hinge plate. Then the rear of the hinge pushed to the hinge plate until it clicks.

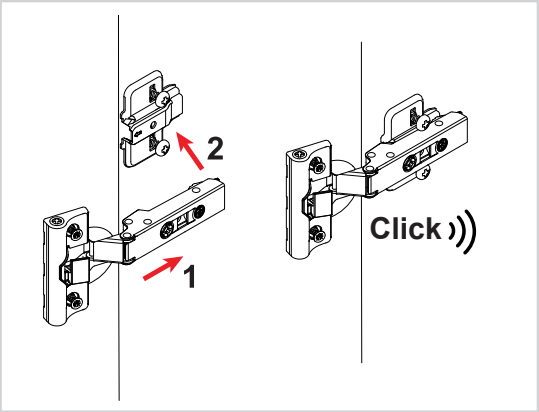

Cleaning the unit

Once the decor has been attached, clean the unit of any debris. Insert all fixings and shelves back into the unit.

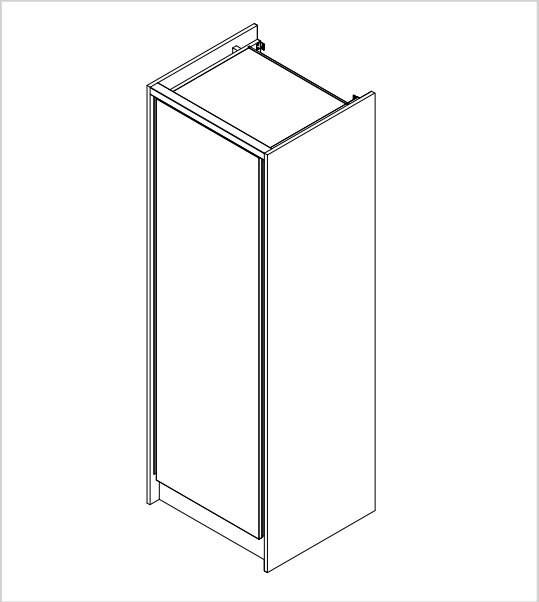

Fitting End Profile to a Unit/Filler

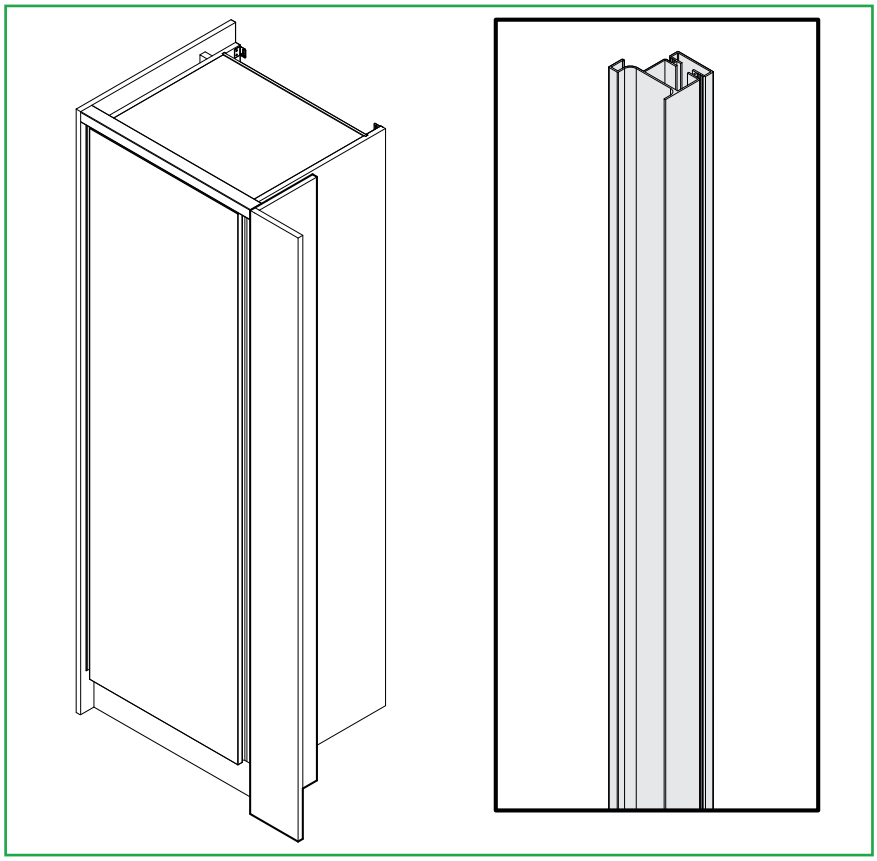

Parts Required

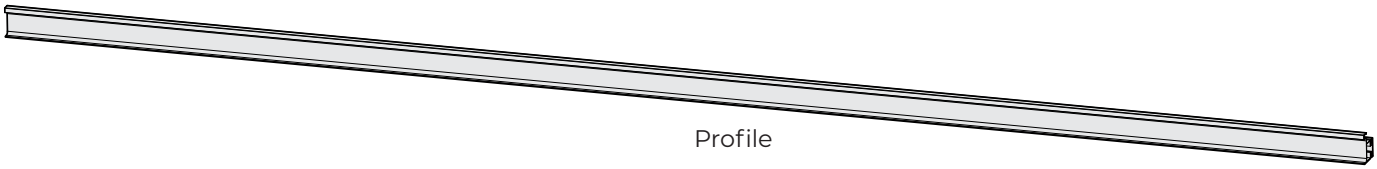

Profile

40mm
Screws
(not supplied)

30mm
Screws
(not supplied)

Cover Caps
(supplied with unit)

Tools Required

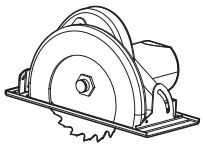

Circular Saw

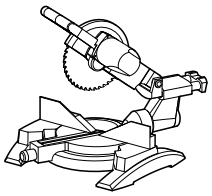

Chop Saw

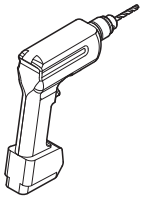

Drill

Countersink
Drill Bit

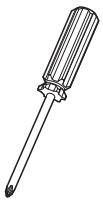

Screw
driver

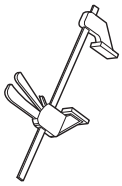

Clamp

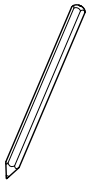

Pencil

Masking
Tape

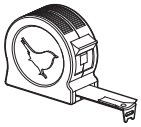

Tape
Measure

Remember to take care when unpacking. Please keep your workspace clean, clear and tidy when working. This will help keep all items safe from any damage. Any un-needed cardboard or plastic should be flattened down and placed in the bin.

Removing the frontal

Remove the frontal from the tower unit by pulling the release catch.

Remove any shelves and fixings from within the unit and put in a safe place.

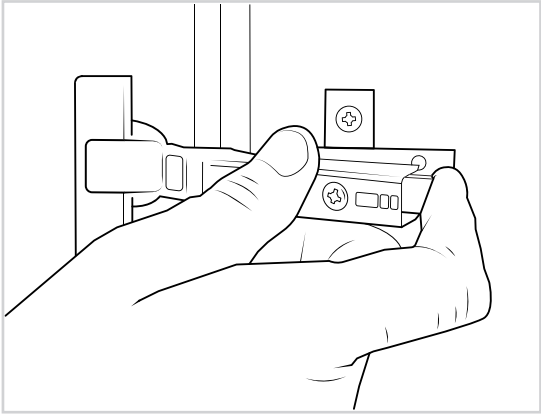

Finding the length of the profile

To find the length of the profile, measure the height of the tower unit.

The profile will sit in line with the underside and top of the unit as shown.

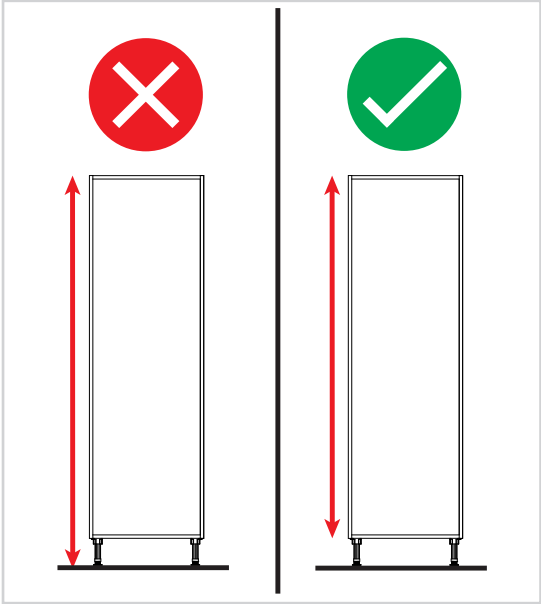

Marking the profile measurements

Apply masking tape to the profile. Using a pencil, mark the measurement obtained.

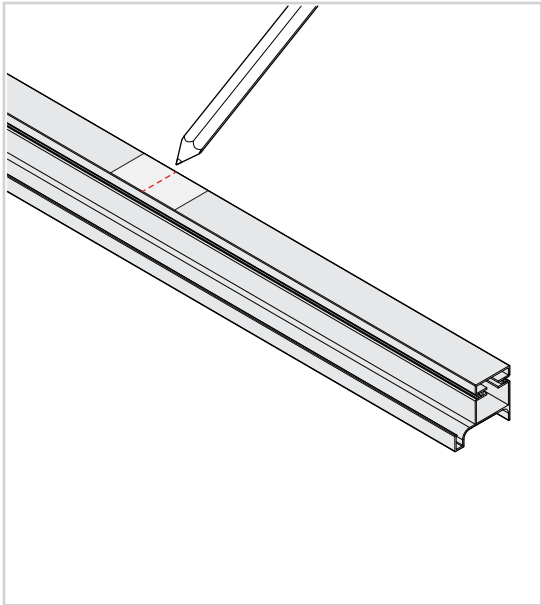

Cutting the profile

Using a chop saw, line up the marked measurement and cut the profile to size.

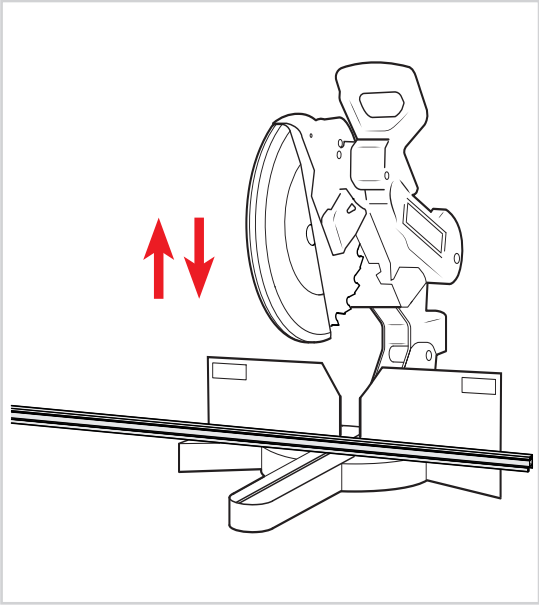

Find the filler measurements and cut to size and assemble (if required)

For more details on finding correct measurements and assembly for the filler, please review the '**Filler panel - fitting guide**'.

Important:

When you take the first measurements from the unit to the wall, make sure you subtract **30mm** from the measurement to allow space between the filler and the unit for the end profile.

Once the filler is assembled, **do not** attach it to the unit at this stage.

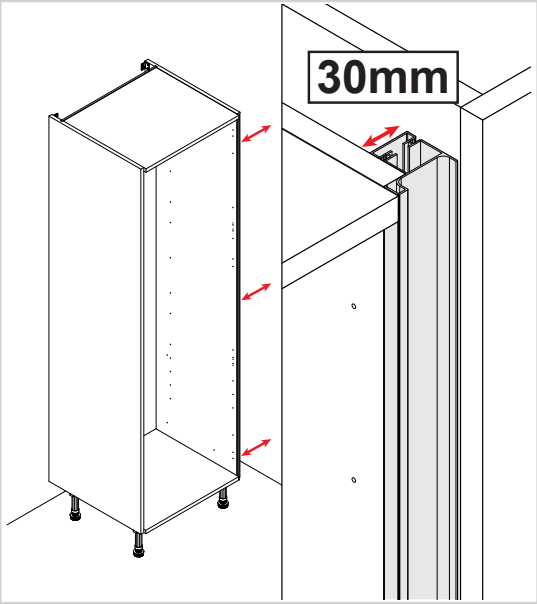

Marking the profile edge on the filler return

Place masking tape on the return edge of the filler where it will sit next to the profile.

Mark a line on the tape, **20mm** back from the front edge as shown.

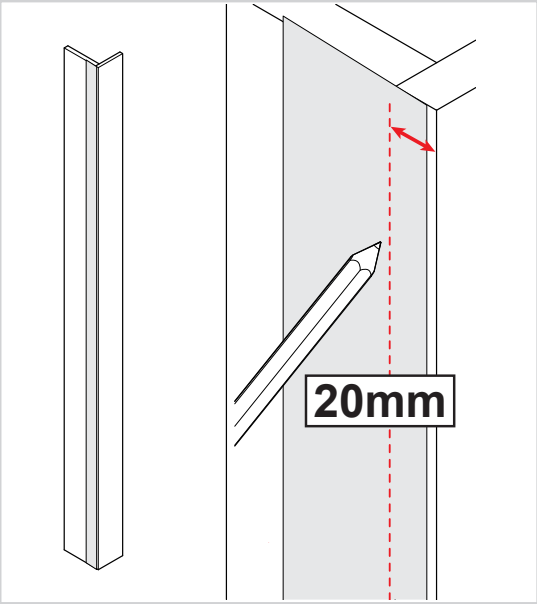

Marking the profile top and bottom

Hold the filler in place next to the unit, and mark the top and bottom edge onto the tape.

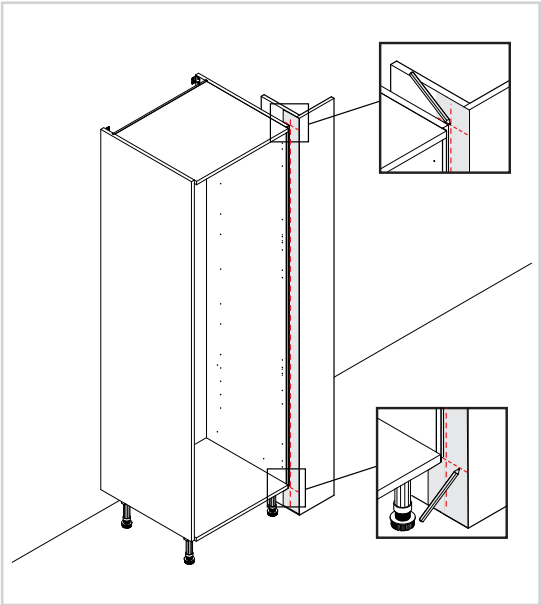

When securing the profile to the filler or unit, screws appropriate for metal are required.

Pre drilling the filler

Clamp the profile onto the assembled filler as shown, making sure the flat edge of the profile lines up with the marking on the masking tape, and the top and bottom line up with the cabinet markings.

Using an appropriately sized bit suitable for metal, pre drill **3** evenly spaced holes through the profile back and into the filler return at the top, middle and bottom of the filler assembly.

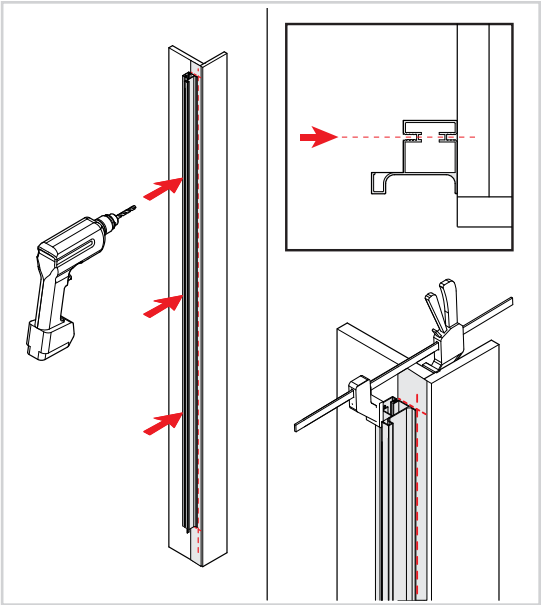

Attaching the profile to the filler

Attach the profile to the filler using **3x40mm** screws through the pre drilled holes.

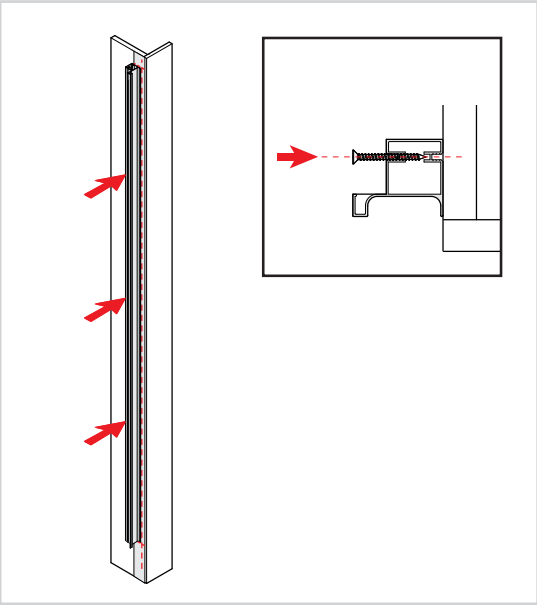

Where an appliance housing is fixed, the screws should be situated behind the appliance.

Marking the screw positions

Put the filler and profile assembly in position, making sure the profile is properly positioned within the notch on the unit.

Place low adhesive masking tape to the inner side of the unit near the front edge.

In **4** evenly spaced positions measure **32mm** from the front of the profile into the unit and mark where the screws will be placed with a pencil. Make sure the screws will not clash with the previously placed screws.

Where possible position the holes behind shelves and hinge plates to conceal any screw heads.

These markings will represent where the screws will be fixed.

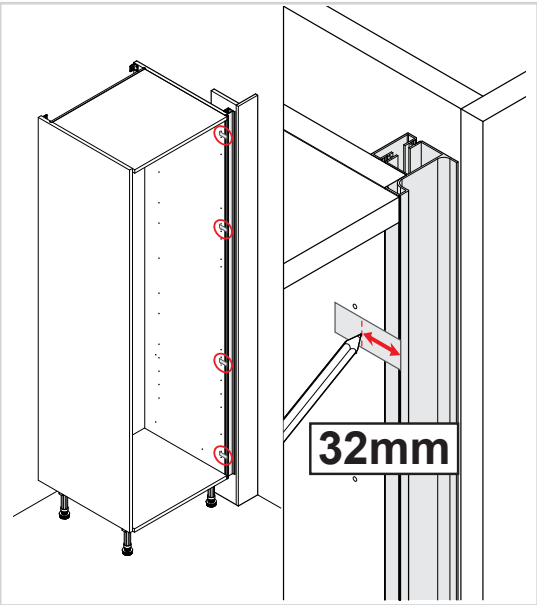

Fixing the profile

Pre-drill a hole in each of the marked positions and remove the masking tape.

Use **4x40mm** screws into the pre-drilled holes to fix the profile and filler to the front of the unit.

Use cover caps to conceal any visible screw heads.

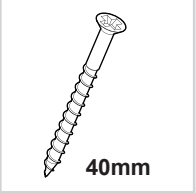

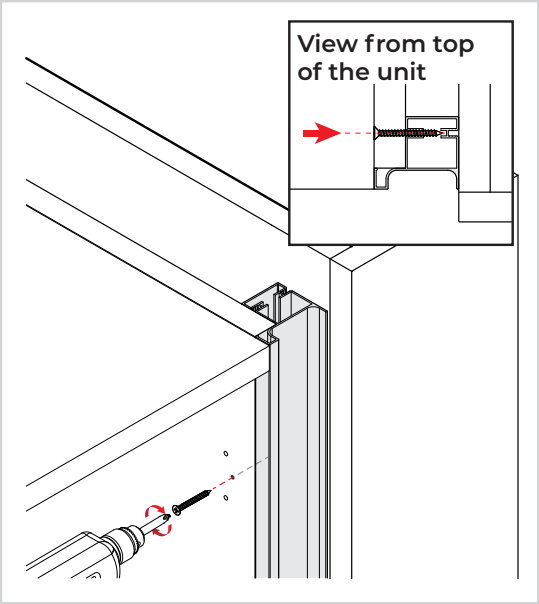

Attaching the frontal

The frontal should be re-attached to the unit by clipping the hinges onto the hinge plates. The bar of the hinge needs to be positioned into the hooks on the hinge plate. Then the rear of the hinge pushed to the hinge plate until it clicks.

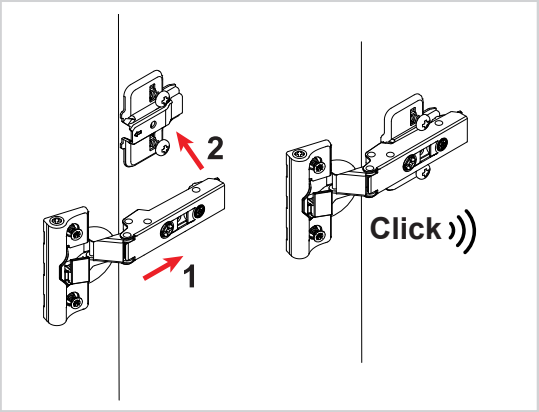

Cleaning the unit
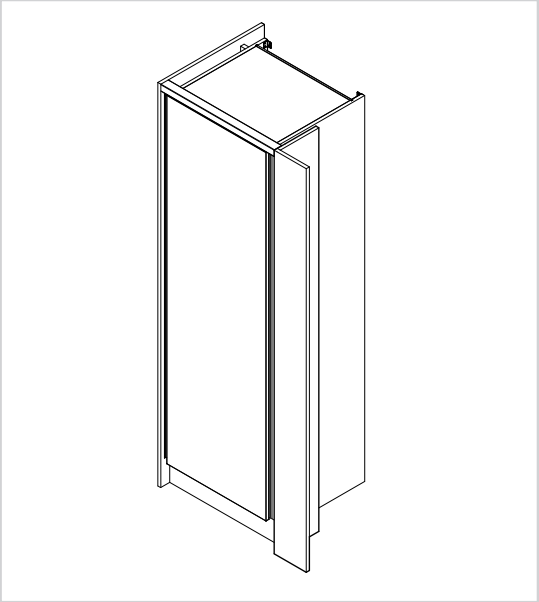
Once the decor has been attached, clean the unit of any debris. Insert all fixings and shelves back into the unit.