INFINITY LINEA

Tower Unit

300 - 500mm Tower (Door, Solid Top, 4 Legs) - Fitting Guide

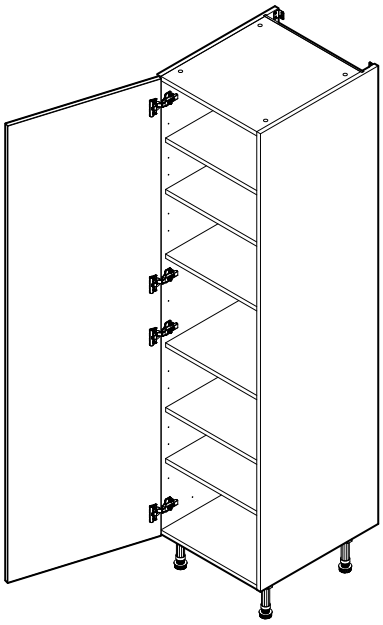

2070 height

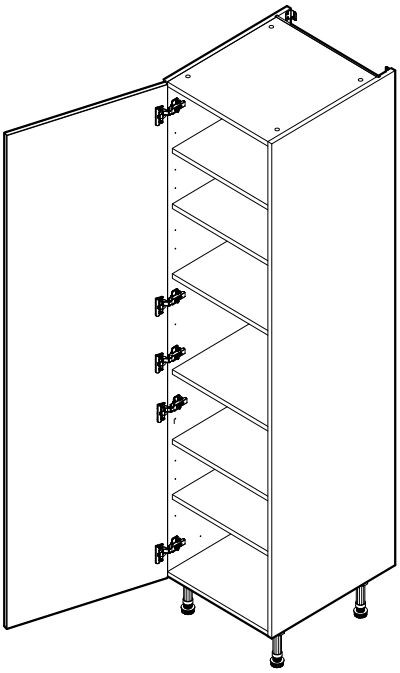

2250 height

Units Parts

30x
15mm Screws

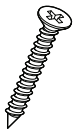

6x
30mm Screws

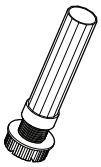

4x
Legs

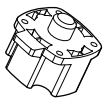

4x
Leg Brackets

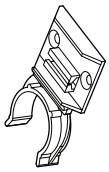

2x
Plinth Clips

18x
Cover Caps

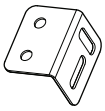

2x
L-Brackets

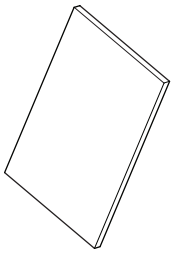

6x
Shelves

24x
Shelf Pegs

5x
Door Buffers

Tools Required

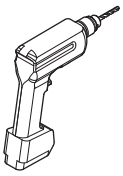

Drill

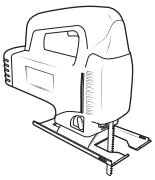

Jigsaw

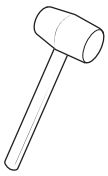

Mallet

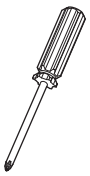

Screwdriver

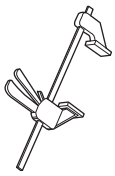

Clamp

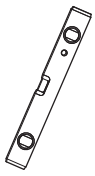

Spirit Level

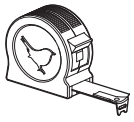

Tape Measure

Remember to take care when unpacking. Please keep your workspace clean, clear and tidy when working. This will help keep all items safe from any damages. Any waste cardboard or plastic should be flattened down and placed in the bin.

A minimum of two people will be needed to lift the unit.

Removing the frontal

Before installing the unit, remove the frontal by pulling the release catch.

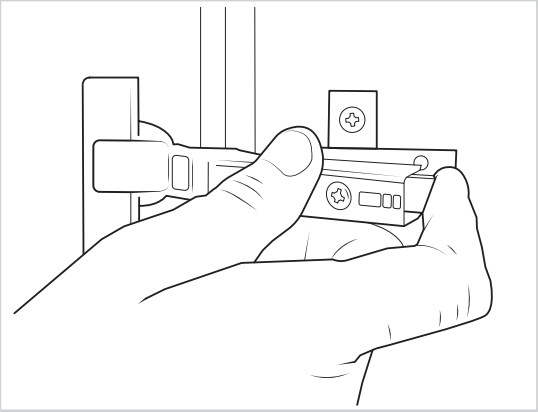

Removing the fittings

Remove all content so the unit is empty.

All fittings and shelves should be kept on a clean and level surface.

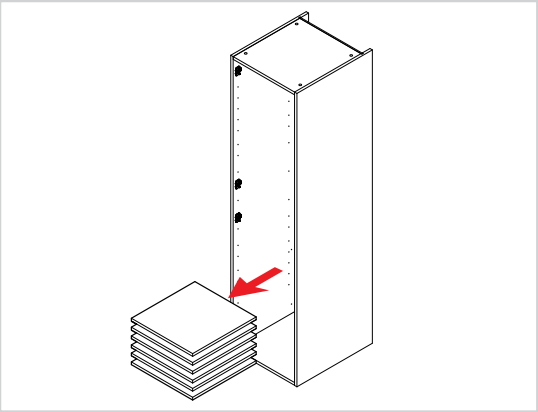

Positioning the leg brackets

Locate the leg brackets and position, as shown in the diagram. Ensure the leg brackets are rotated so the flange covers the outer edge, as this provides support for the edge of the unit.

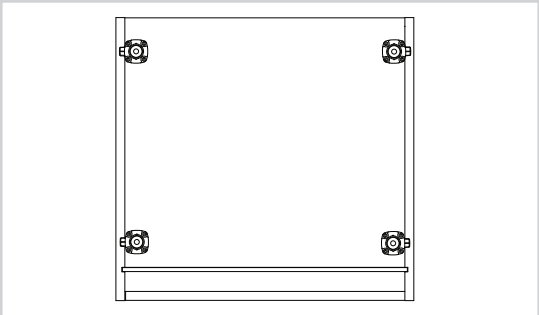

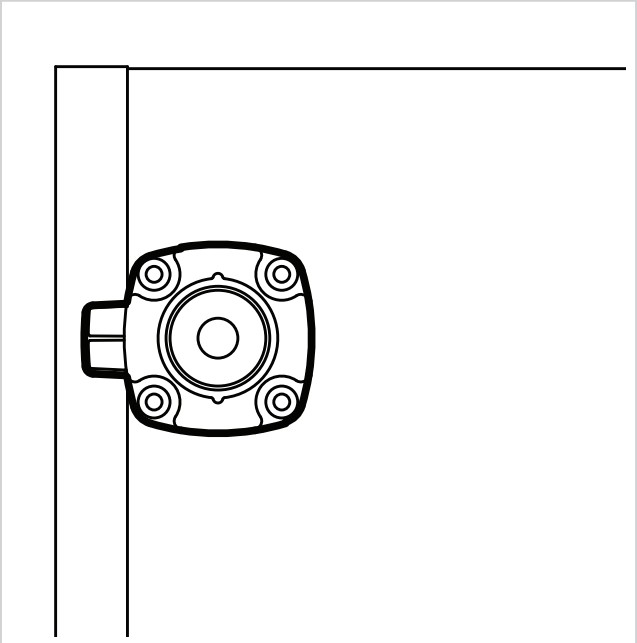

Fixing the leg bases

Secure each of the leg brackets into place with **4x15mm** screws per bracket.

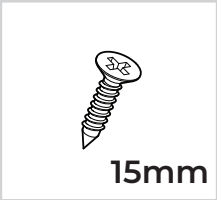

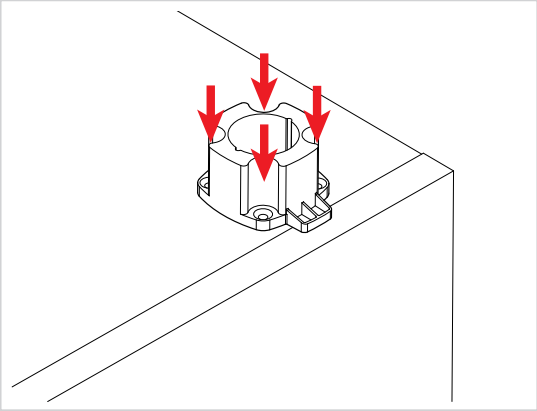

Inserting the legs

Push each leg firmly down into the leg bracket. Adjusting each leg to **165mm**.

Adjust the legs to the correct height by turning clockwise or anti-clockwise.

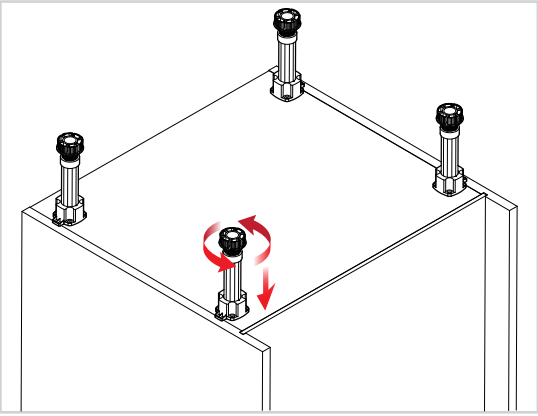

Securing the L-bracket

Secure each of the L-bracket to the rear of the unit using **2x15mm** screws at each side.

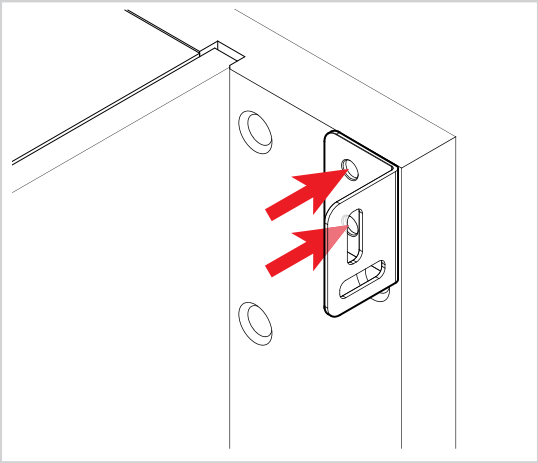

Notching out the side panels (when required)

In order to allow for any horizontal pipework running behind the unit, some units will require the back of unit's side to be notched out.

Create a notch for the horizontal pipes at the back of the end panels using a jigsaw.

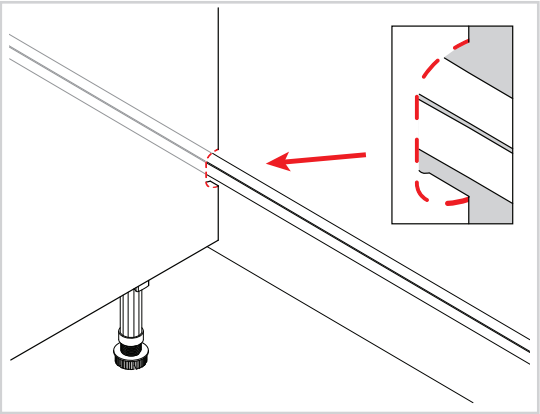

Lifting the unit into place

When lifting the unit into place do **not** tilt as this can damage the legs.

Place the unit against the wall and align it with the wall markings that will have been drawn during the room preparation stage.

Use a spirit level to ensure the unit is level from front to back, left to right, and diagonally. Adjust the legs if required.

The leg height can be adjusted by turning the foot of the leg clockwise or anti-clockwise.

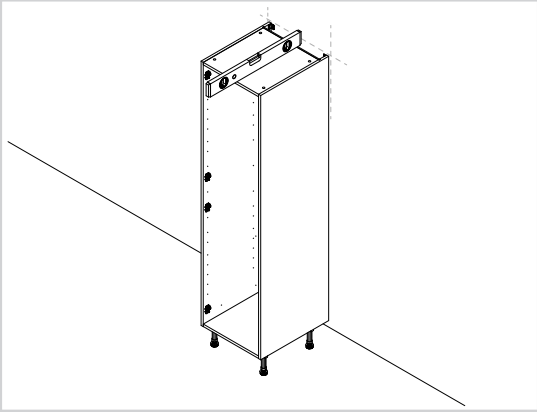

No screws are provided for attaching the unit to the wall.
This is due to variations in wall construction.

Before drilling into the wall you MUST check for any hidden services or pipework within the walls.

Attaching the tower unit to the wall

Fix the unit to the wall through the L-brackets as shown in the image (these fixings are not provided).

For guidance on the appropriate wall fixing for each wall type, please consult the "**Room Preparation Guide**."

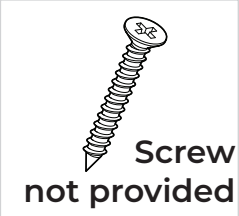

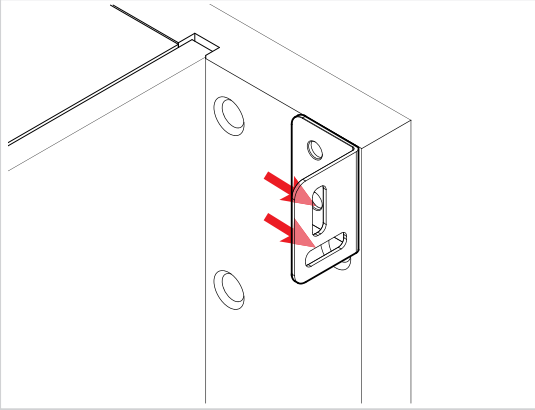

To attach adjacent tower units to this unit, refer to:
Milano Mid Profile - Fitting Guide.

To attach adjacent base or wall units to this unit, refer to:
Milano End Profile - Fitting Guide.

Placing the shelf into position

Position the shelf pegs into the pre-drilled holes.

Place the shelves into position so the pin of the shelf peg is inserted into the pre-drilled holes.

The shelves will touch the back panel when installed, if there is a gap between the back panel and shelf then the shelf has been installed back to front and the shelf needs to be rotated.

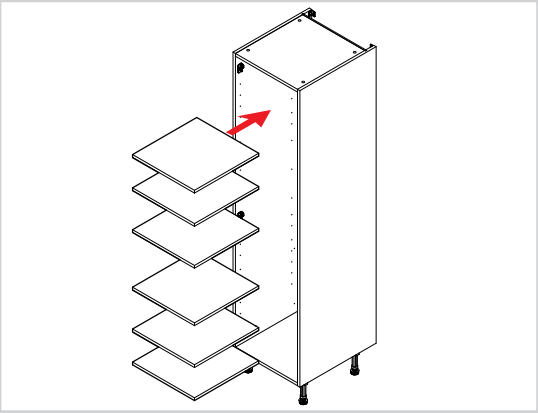

Attaching the frontal

The frontal should be re-attached to the unit by clipping the hinges onto the hinge plates. The bar of the hinge needs to be positioned into the hooks on the hinge plate. Then the rear of the hinge pushed to the hinge plate until it clicks.

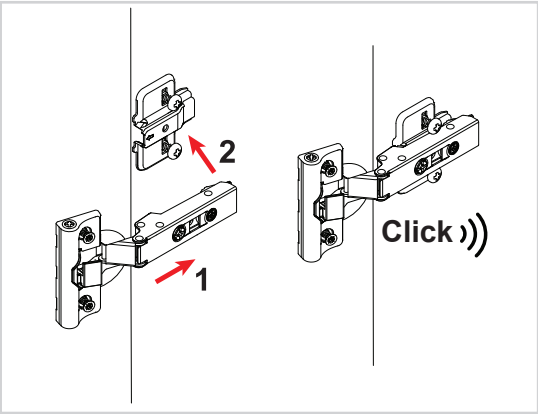

Adding the door buffers

Position **1x** door buffer at the top and bottom corners of the carcase, as illustrated in the image.

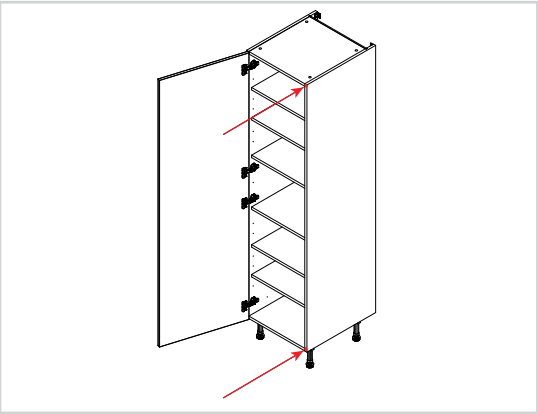

Cleaning the unit

Finally, the unit should be thoroughly cleaned to remove any debris that may have accumulated during the installation.

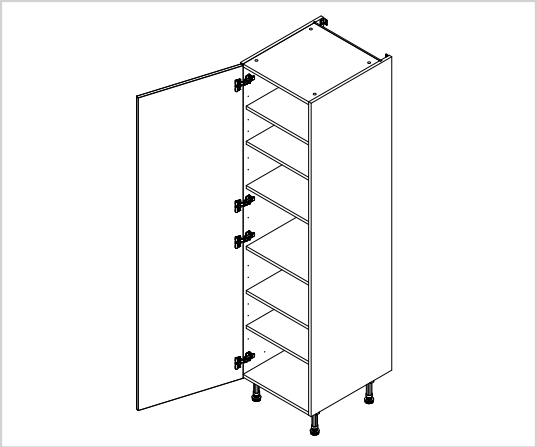

Store the plinth clips and the remaining 15mm screws.
These will be used later when attaching the plinth.

For door alignment please review the following installation guide:
Door - Door Frontal Hinge Adjustment