EASY-FIT

Tower Unit

1 or 2 Appliance Tower (Door, Solid Top, 5 Legs) - Fitting Guide

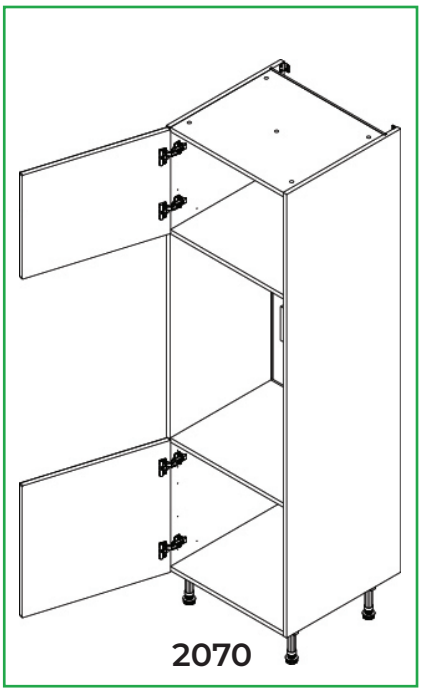

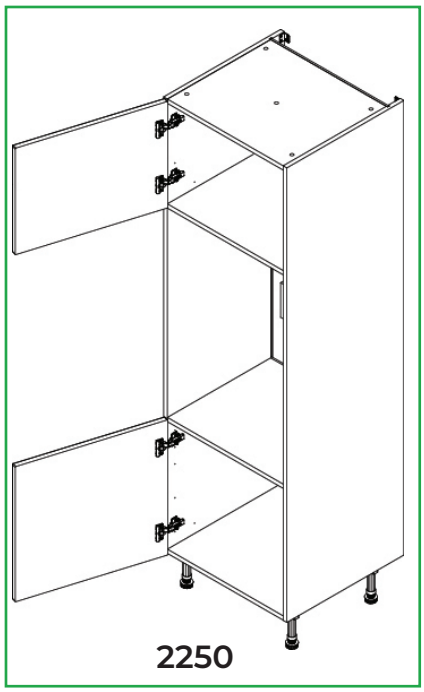

Unit Parts

32x 15mm Screws

6X 30mm Screws

18x Cover Caps

5x Legs

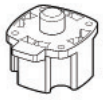

5x Leg Brackets

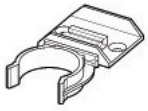

2x Plinth Clips

5x Door Buffers

2x L-Brackets

4x Small L-Brackets

1x Shelf

Tools Required

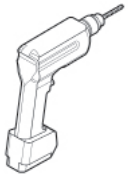

Drill

Jigsaw

Mallet

Screwdriver

Clamp

Spirit Level

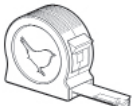

Tape Measure

Remember to take care when unpacking. Please keep your workspace clean, clear and tidy when working. This will help keep all items safe from any damage. Any un-needed cardboard or plastic should be flattened down and placed in the bin.

A minimum of two people will be needed to lift the unit.

Removing the frontals

Before installing the unit, remove the frontal by pulling the release catch.

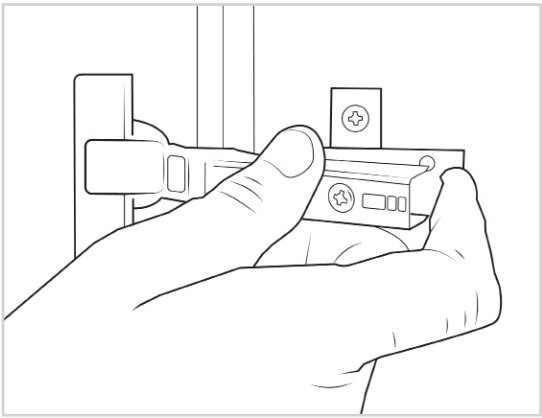

Removing the fittings

Remove all content so the unit is empty.

All fittings should be kept on a clean and level surface and the shelf placed in the door safe along its longest length.

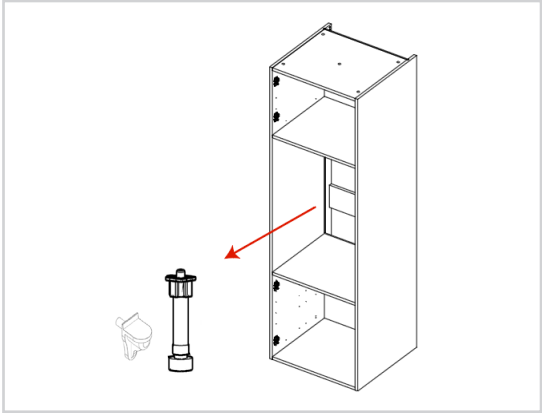

Positioning the leg brackets

Locate the leg brackets and position, as shown in the diagram. Ensure the leg brackets are rotated so the flange covers the outer edge, as this provides support for the edge of the unit.

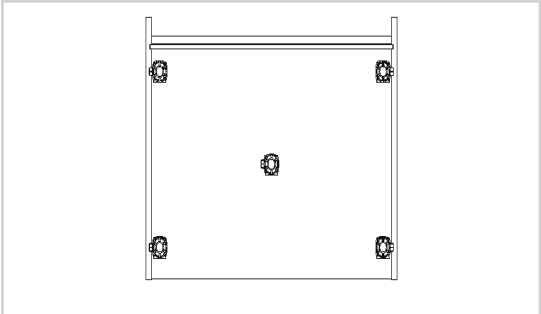

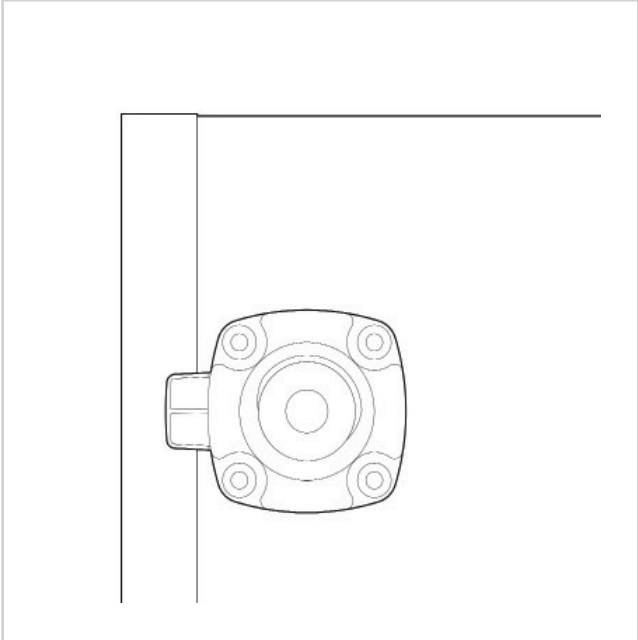

Fixing the leg bases

Secure each of the leg brackets into place with **4x15mm** screws per bracket.

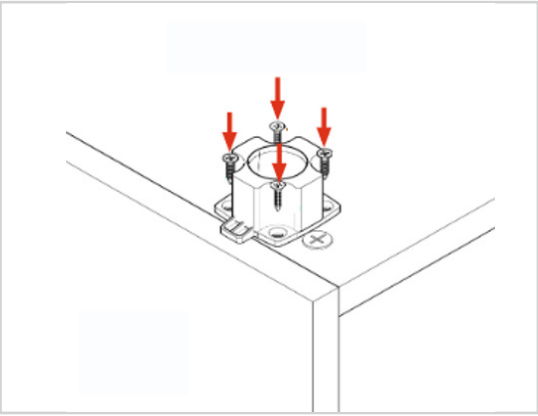

Inserting the legs

Push each leg firmly down into the leg bracket. Adjusting each leg to **155mm**.

Adjust the legs to the correct height by turning clockwise or anti-clockwise.

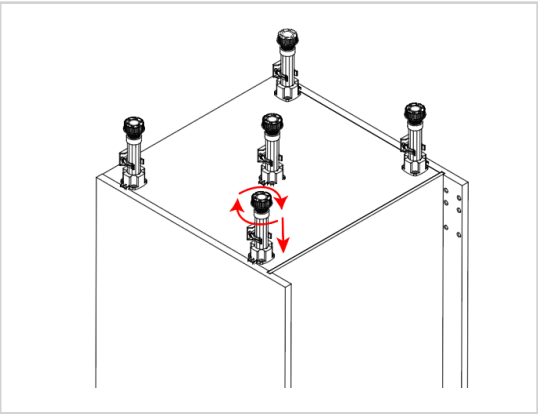

Securing the L-bracket

Secure each of the L-brackets to the upper rear of the unit using **2x15mm** screws at each side.

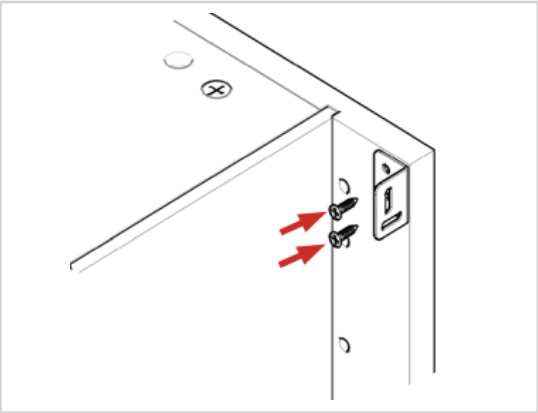

Removing the transport panel

Slide the transport panel out from the back of the unit and discard the panel.

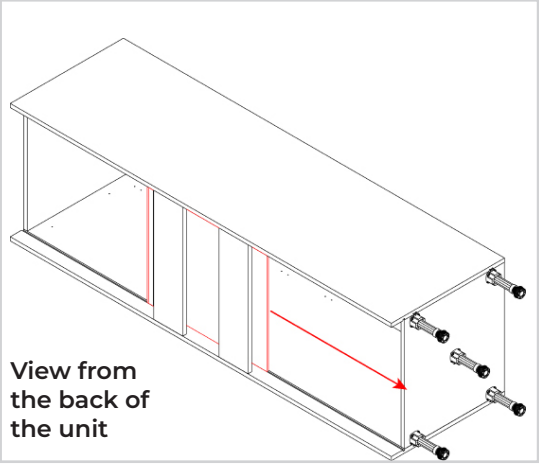

Lifting the unit into place

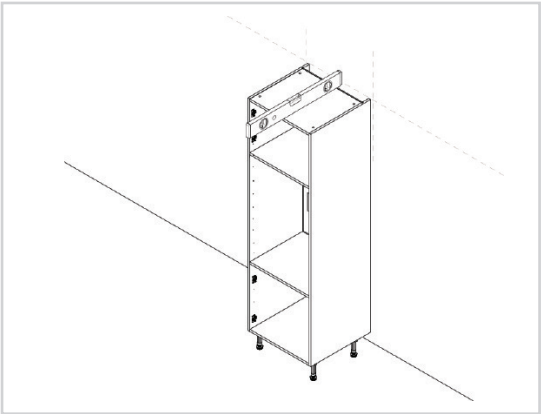

When lifting the unit into place do not tilt as this can damage the legs.

Place the unit against the wall and align it with the wall markings that will have been drawn during the room preparation stage.

Use a spirit level to ensure the unit is level from front to back, left to right, and diagonally. Adjust the legs if required.

The leg height can be adjusted by turning the foot of the leg clockwise or anti-clockwise.

No screws or wall plugs are provided for the wall attachment due to variations in wall materials, thickness, and construction.

Before drilling into the wall you MUST check for any hidden services or pipework within the walls.

Attaching the unit tower to the wall

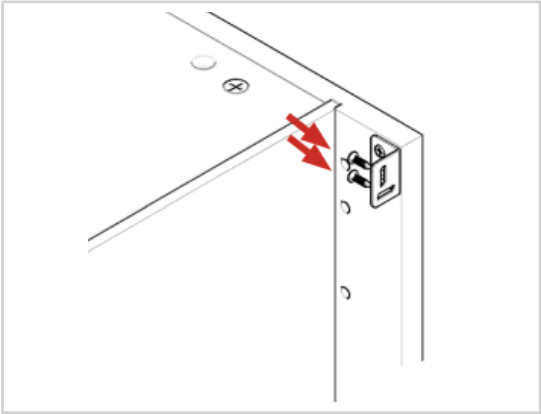

Fix the unit to the wall through the L-brackets as shown in the image (these fixings are not provided).

Securing to adjacent units

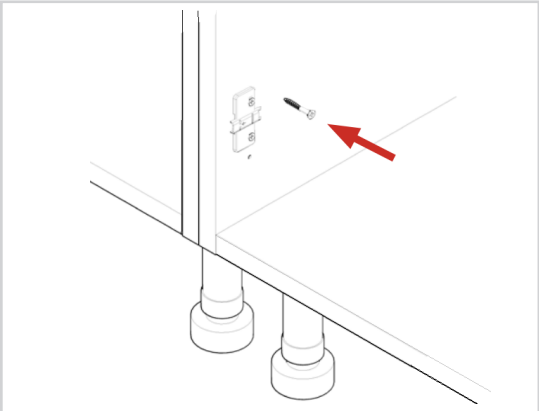

Clamp together the two units, checking the front edges are level and flush.

Using the screws provided, **1x30mm** screw should be fixed into each corner of the carcase side.

The screws can be concealed by placing them behind the shelf or behind the hinge plates. The cover caps can be used to hide any visible screw heads that remain.

The following steps are to help you find the height of the shelf that is required if more than one appliance is planned in the unit.
Do NOT fit the appliances at this stage.

Placing the appliance shelf correctly (required for 2 appliances)

If there are two appliances the shelf should be fitted to go between them as shown.

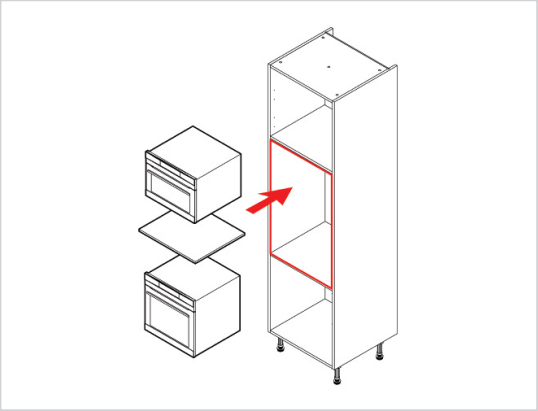

Planning the shelf height

When planning the height of the shelf, make sure that when the appliances and frontals are in position, the gaps at points **A**, **B** and **C** between the appliances and unit frontals will be equal.

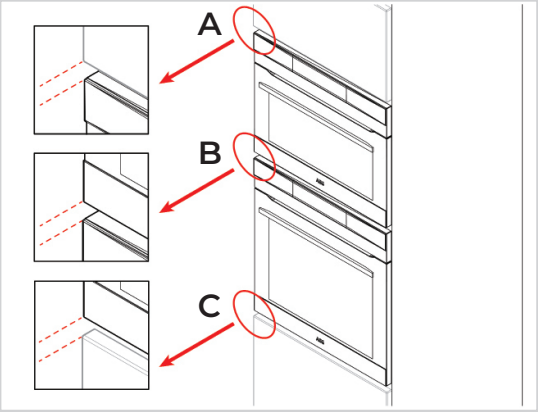

Securing the shelf

Before inserting the appliances, secure the shelf to the tower using **4x** L brackets with **4x15mm** screws per bracket.

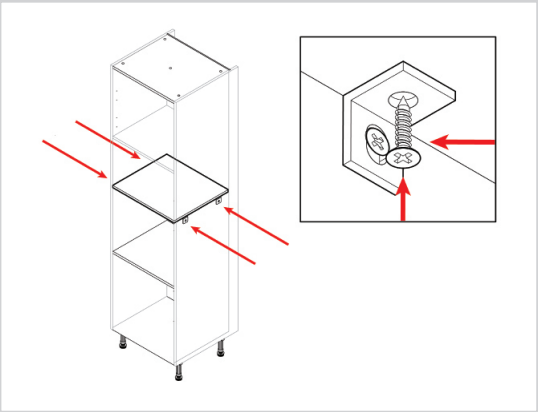

Attaching the frontal

The frontal should be re-attached to the unit by clipping the hinges onto the hinge plates. The bar of the hinge needs to be positioned into the hooks on the hinge plate. Then the rear of the hinge pushed to the hinge plate until it clicks.

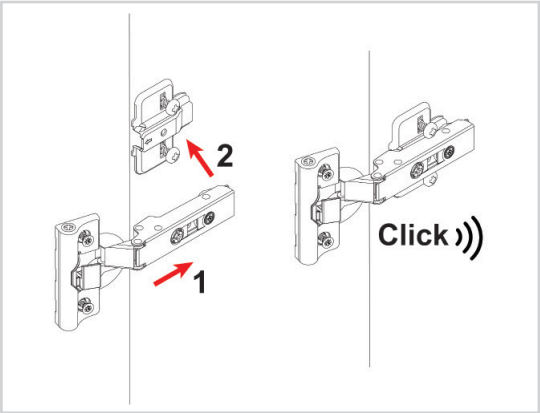

Adding the door buffers

Position **4x** door buffer along the carcase, as illustrated in the image, ensure to place them where the door meets the carcase.

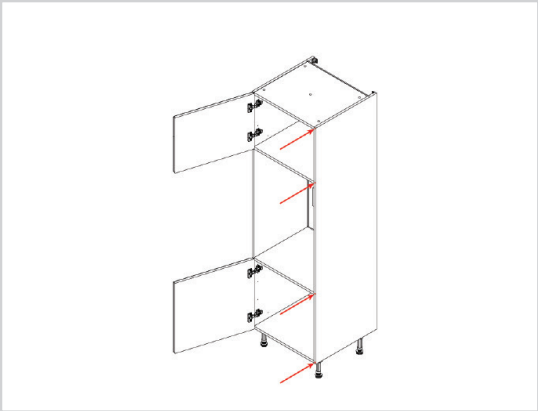

Cleaning the unit

Finally, the unit should be thoroughly cleaned with a vacuum or dust pan and brush to remove any debris that may have accumulated during the installation.

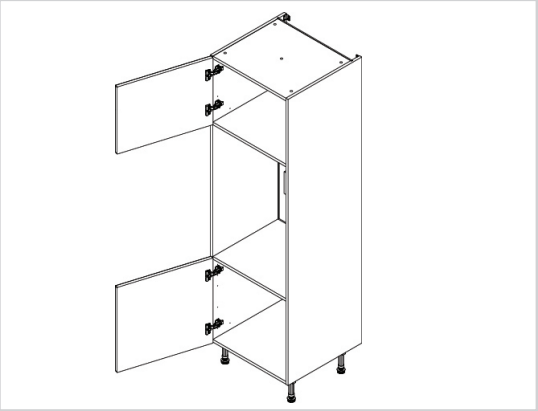

Store the plinth clips and the remaining 15mm screws.
These will be used later when attaching the plinth.

For door alignment please review the following installation guide:
Door - Door Frontal Hinge Adjustment

wren KITCHENS