LINEA/MILANO

Base Unit

600 Appliance Base (Open Top, 4 Legs) - Fitting Guide

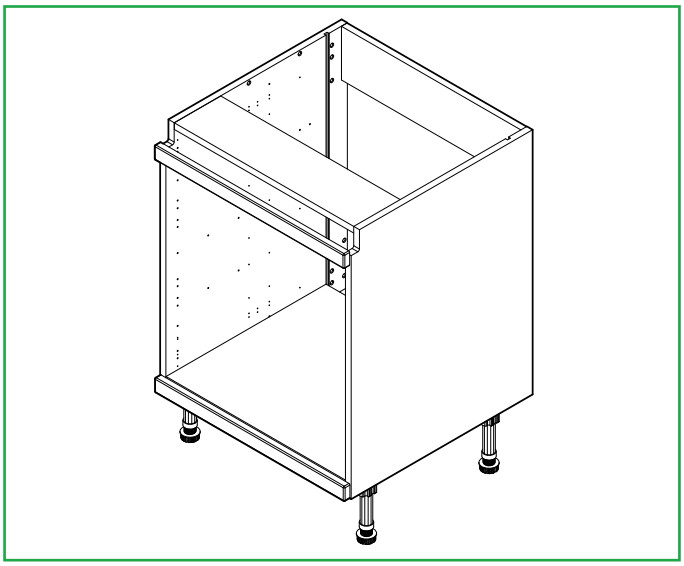

Unit Parts

22x
15mm Screws

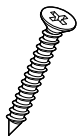

6x
30mm Screws

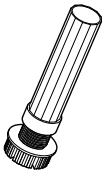

4x
Legs

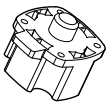

4x
Leg Brackets

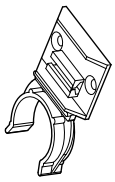

2x
Plinth Clips

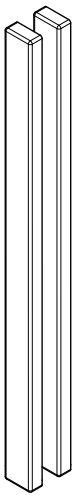

2x
Fillers (Packed separately)

18x
Cover Caps

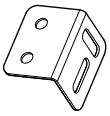

2x
L-Brackets

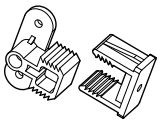

2x
Dummy Fixing
Clip Inc Screws

2x
Small
L-Brackets

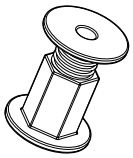

1x
Space Plug

Tools Required

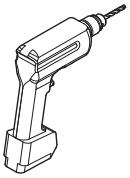

Drill

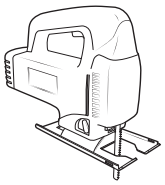

Jigsaw

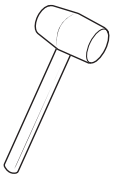

Mallet

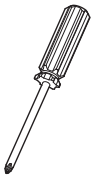

Screwdriver

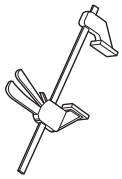

Clamp

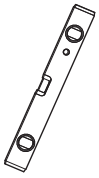

Spirit Level

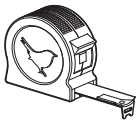

Tape Measure

Remember to take care when unpacking. Please keep your workspace clean, clear and tidy when working. This will help keep all items safe from any damage. Any un-needed cardboard or plastic should be flattened down and placed in the bin.

A minimum of two people will be needed to lift the unit.

Removing the fittings

Remove all content so the unit is empty.

All fittings should be kept on a clean and level surface.

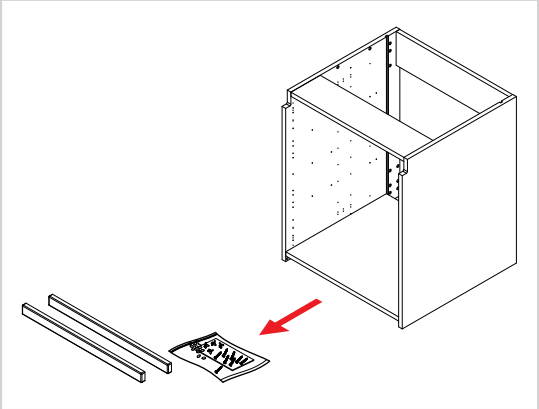

Positioning the leg brackets

Locate the leg brackets and position, as shown in the diagram. Ensure the leg brackets are rotated so the flange covers the outer edge, as this provides support for the edge of the unit.

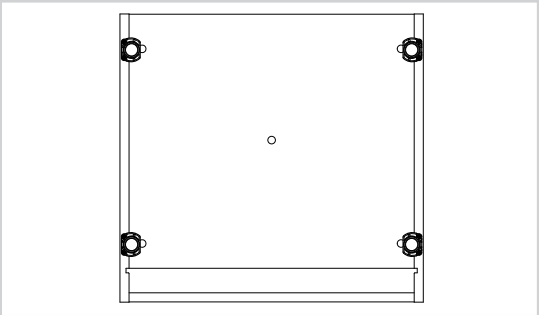

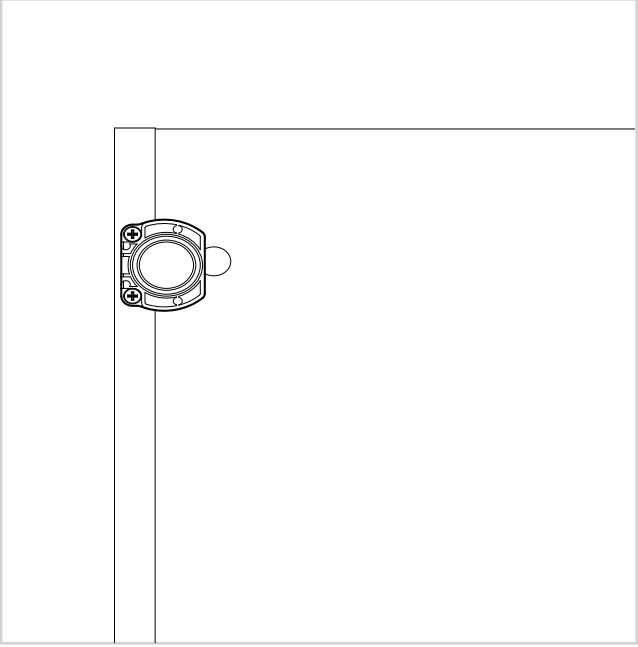

Fixing the leg bases

Using **4x15mm** screws for each leg, fasten the leg bases into position. As indicated in the picture, there are **2x** screws on the bottom and **2x** screws on the side.

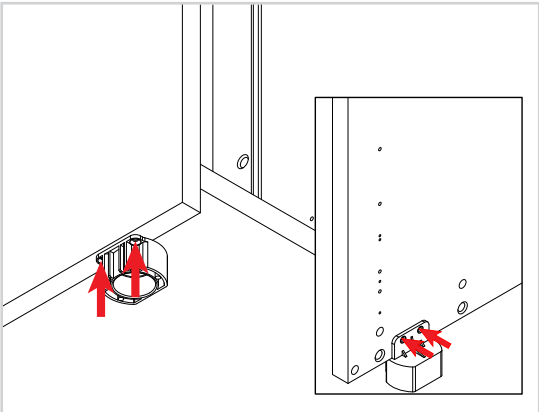

Inserting the legs

Push each leg firmly down into the leg bracket. Adjusting each leg to **165mm**.

Adjust the legs to the correct height by turning clockwise or anti-clockwise.

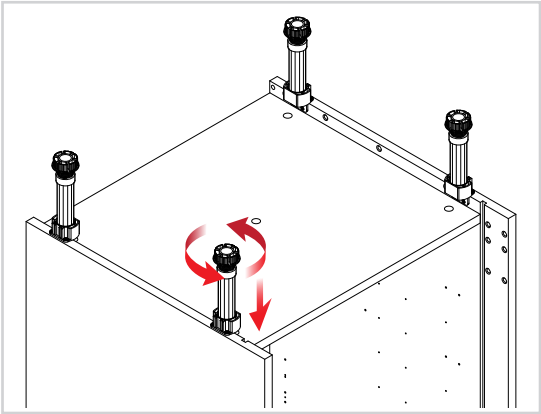

Attaching the L-brackets to the filler

Using one **1x15mm** screw per small L bracket, attach the two small L brackets to the inner face of the Filler.

The screw holes for the brackets should be positioned **155mm** from the side edges and **24mm** from the bottom edge as shown in the diagram.

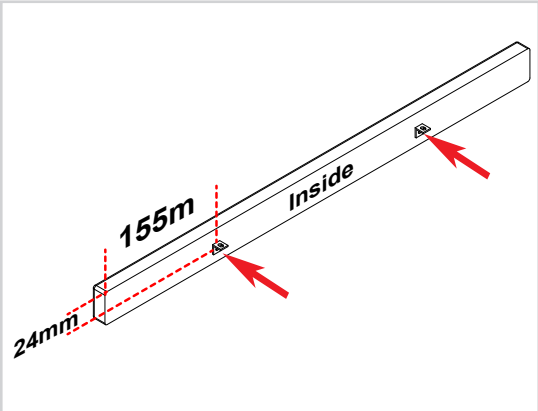

Fixing the filler to the unit

Put the unit in position next to it's adjacent units. The adjacent units should have their frontals attached.

Hold the filler and brackets against the bottom of the unit to check that the filler will allign with the frontals.

Turn the unit upside down and secure the filler with **1x15mm** screw per small L bracket to the base of the unit as shown.

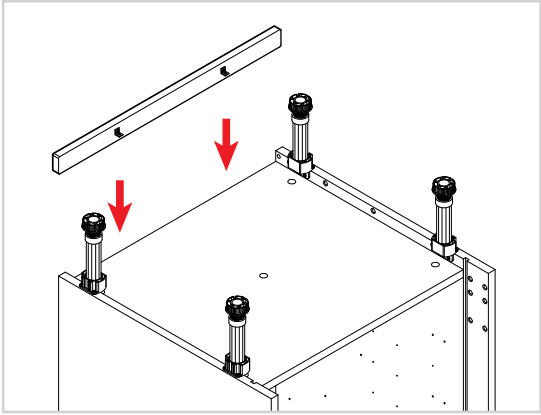

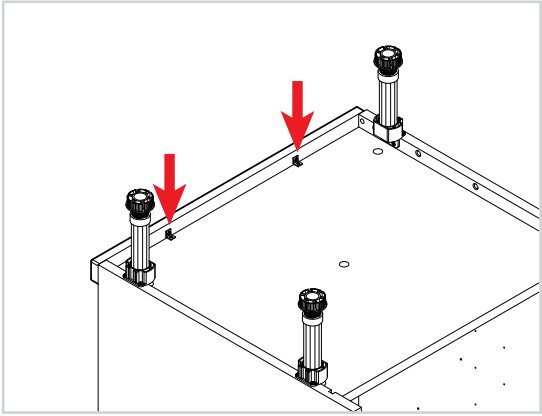

Securing the dummy fixing clips onto the unit (Part A)

Secure the dummy fixing clips (Parts A) onto both side panels of the unit using **2x15mm screws** for each of the clips.

Using the pre-drilled hole, position the bottom screw hole **74mm** from the top of the unit's side panel.

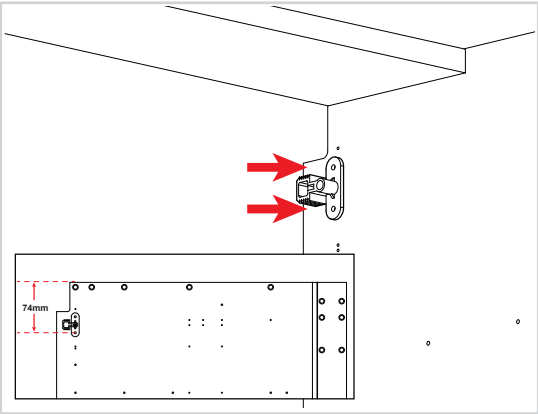

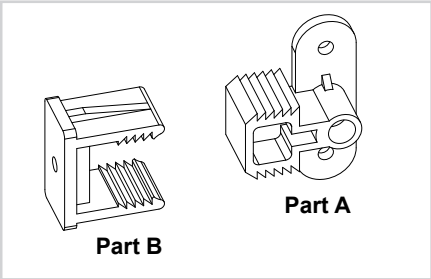

Securing the dummy fixing clips onto the 2nd filler (Part B)

Using one **1x15mm** screw per dummy fixing clip (Parts B), space them evenly onto the inside face at the bottom of the filler, position them so that the screw holes are **19mm** from the bottom edge and **26mm** from the side edges.

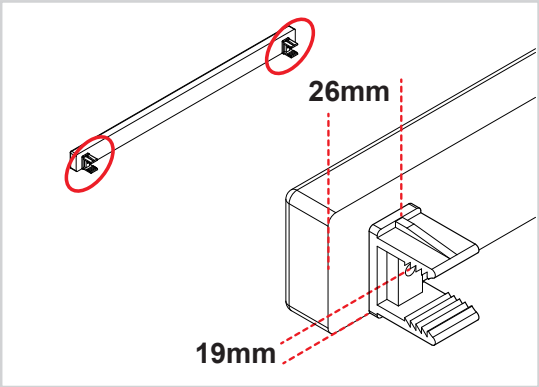

Fixing the filler to the unit

Push the filler and clips (Part A) onto the unit and clips (Part B) to attach.

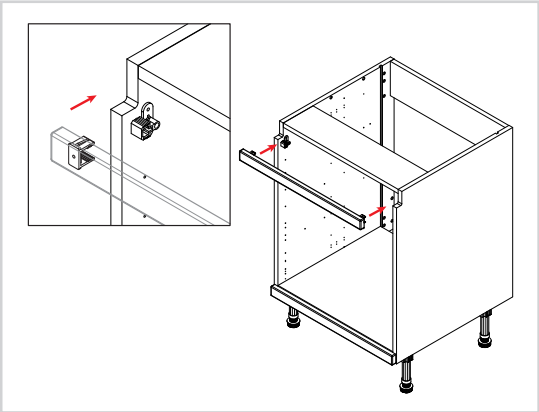

Notching out the end panels (when required)

In order to allow for any horizontal pipework running behind the unit, some units will require the back of the unit sides to be notched out.

Create a notch for the horizontal pipes at the back of the end panels using a jigsaw.

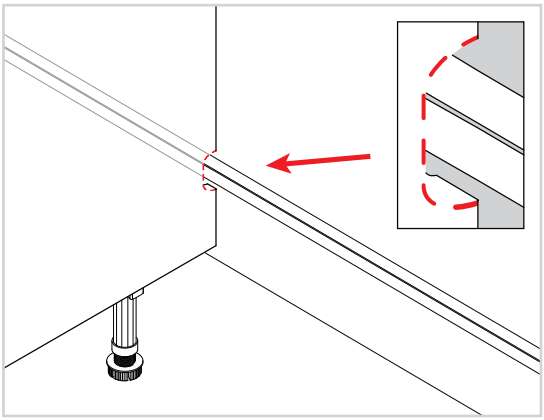

Lifting the unit into place

When lifting the unit into place do **not** tilt as this can damage the legs.

Place the unit against the wall and align it with the wall markings that will have been drawn during the room preparation stage.

Use a spirit level to ensure the unit is level from front to back, left to right, and diagonally. Adjust the legs if required.

The leg height can be adjusted by turning the foot of the leg clockwise or anti-clockwise.

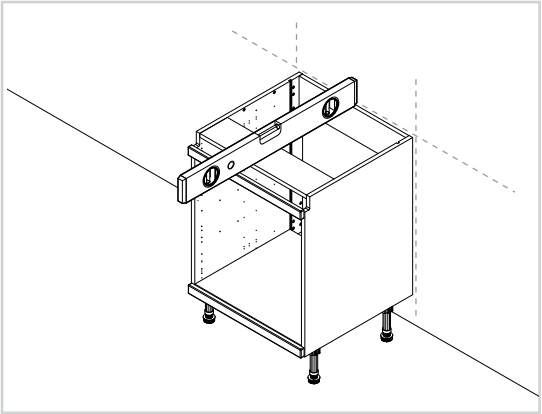

No screws or wall plugs are provided for attaching the unit to the wall. This is due to variations in wall construction.

Before drilling into the wall you MUST check for any hidden services or pipework within the walls.

Drilling the pilot holes

Drill a pilot hole through the back panel making sure to lightly mark the wall to indicate where the wall fixing should be placed. The hole should be located as per the diagram, in the centre and close to the top of the unit.

For guidance on the appropriate wall fixing for each wall type, please consult the "**Room Preparation Guide**."

Once complete lift and move the unit away from the wall. Using the pilot hole, drill a hole to suit the fixing. Place the wall fixing within the hole. Lift and reposition the unit, ensuring it is level and in line with the wall markings.

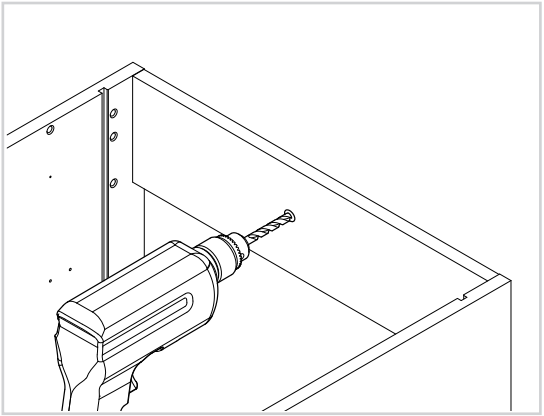

Before attaching the units together, ensure that the Linea/Milano profile cutout of both units align.

Securing to adjacent units

Clamp together the two units, checking the front edges are level and flush.

Using the screws provided, **1x30mm** screw should be fixed into each corner of the unit side.

The screws can be concealed by placing them behind the appliance. Cover caps can be used to hide any visible screw heads that remain.

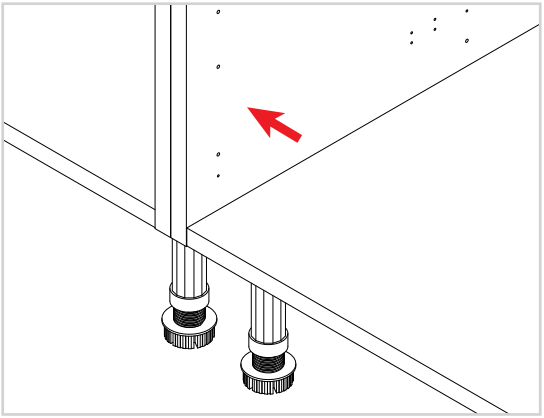

Cleaning the unit

Finally, the unit should be thoroughly cleaned to remove any debris that may have accumulated during the installation.

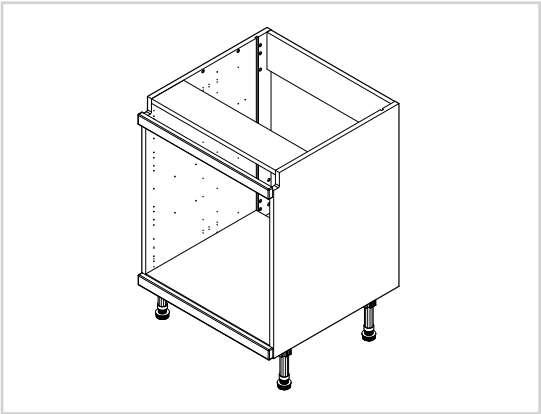

Store the plinth clips and the remaining 15mm screws.
These will be used later when attaching the plinth.

Store the L-brackets.
These will be used later when installing the worktop (laminate or timber).