For Earth, For Life

Kubota

RA

KUBOTA RA SERIES

Fresh thinking is the answer to today's challenges.

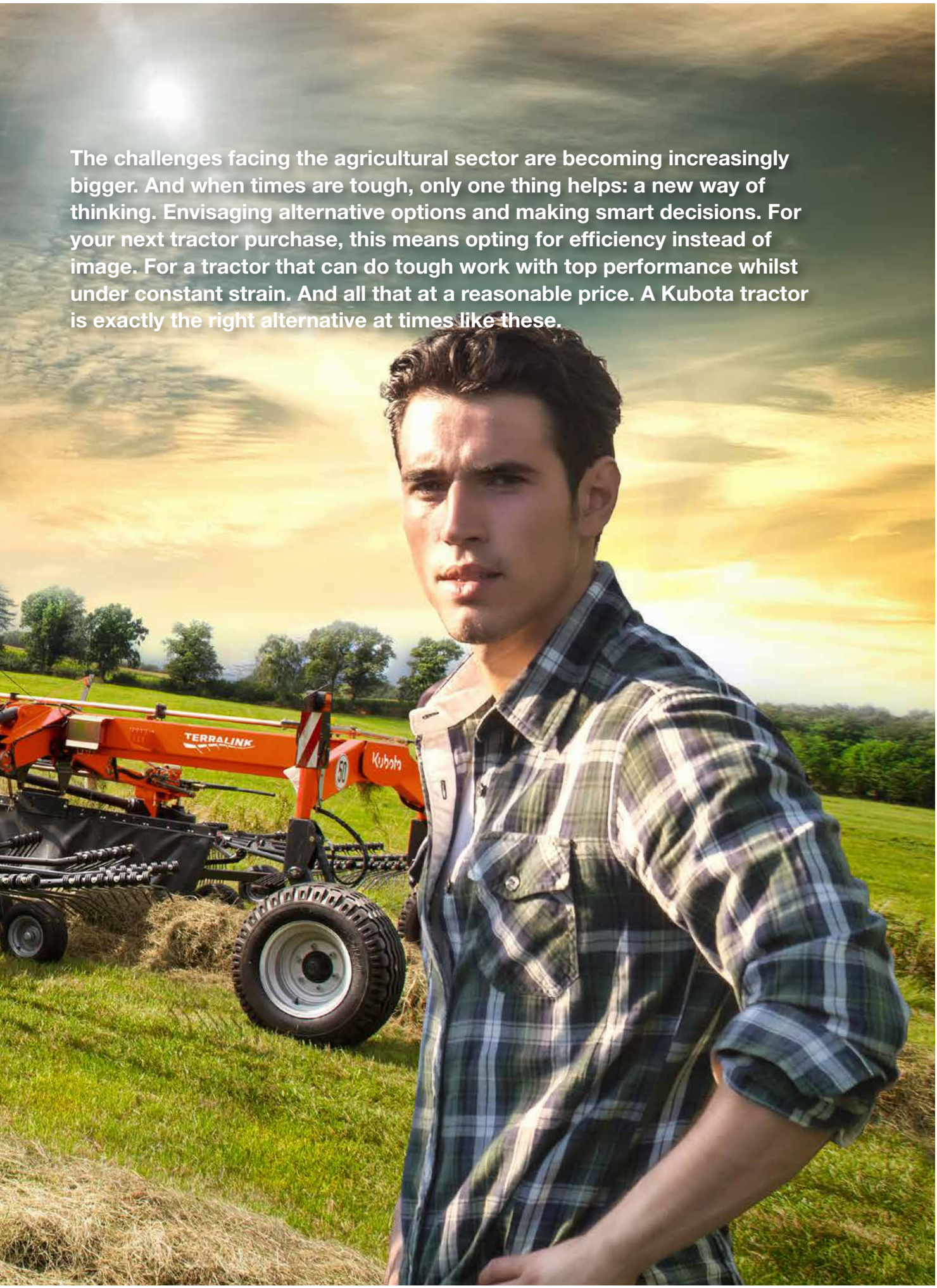

The challenges facing the agricultural sector are becoming increasingly bigger. And when times are tough, only one thing helps: a new way of thinking. Envisaging alternative options and making smart decisions. For your next tractor purchase, this means opting for efficiency instead of image. For a tractor that can do tough work with top performance whilst under constant strain. And all that at a reasonable price. A Kubota tractor is exactly the right alternative at times like these.

#Highlights

RA1000-4500: Made to perform – day in, day out

Correctly adjusting and customising the rake to the exact conditions you are facing today is what adds the extra quality to your forage, ensuring that dirt stays out of the swath, yet leaving no crop behind. Setting the rotor height, adjusting the swath width and fine tuning the cam track (ProLine) is done easily and intuitively on all Kubota rakes, taking the hassle out of the daily work optimisation.

RA1000 series
For smaller raking operations, Kubota offers several **CompactLine** models designed for use on lower horsepower tractors. With the pivoting three point linkage machines and also two trailed versions, there is a model to suit any need.

RA1500 series
Single **ProLine** rotor rakes with excellent working result. The machines are based on ProLine gearbox technology. The rakes offers working width of 4.2m to 4.6m.

RA2000 series
Cost-effective **CompactLine** two rotor rakes with strong design. The rakes produce a nice even centre swath from raking width between 6.2m and 7.8m.

RA2500 series
The tough and sturdy **ProLine** rakes with adjustable working width ranging from 7.0m to 9.0m.

RA4000 series
The **CompactLine** version is an easy-to-use machine with the substantial working width of 10-12.5m.

RA4500 series
Designed for high output and heavy use. Four rotors, **ProLine** gearbox and up to 15m working width.

#Gearbox

Consistently on track for success: durability exemplified

Reliable and solid technology helping you to do more!

Maintenance-free operation

- Steplessly adjustable cam track for easy adaptation to different amounts and types of crop.
- Injection moulded aluminium tine arm support housings provide strength and reduced weight.
- All tine arms, including housing, can be removed individually by just removing 3 bolts.
- Oil-immersed crown wheel and pinion reduce wear to a minimum.
- Pinion gear with two bearings separate from the main driveline keeps pinion and crown wheel securely in place.
- 400mm cast iron cam track with optimised shape, for smooth tine arm control and reduced running speed.
- Unique 4-point ball bearing on crown wheel ensures efficient power transfer to the tine arms.
- Guide rollers with hardened surface minimise wear on cam track and cam follower.
- Heavy duty ball bearings with large distance for excellent support of tine arm shafts.

CompactLine
The Kubota CompactLine rakes feature oil-immersed cam track guide rollers. Also, the tine arm bearings are fully lubricated, and hence absolutely maintenance-free.

High-tensile tine arm holders and two bearings on either side of the driveshaft, provide the compact unit with strength and dependability.

Kubota-developed cam tracks are specifically tailored to individual rotor diameters, for optimal raking at any working width and on any model.

All CompactLine rakes are fitted with curved tine arms, to ensure a regular and even swath formation. Additionally the curved shape prevents material from being pushed in the direction of the rotor and allows a higher lifting out of the swath.

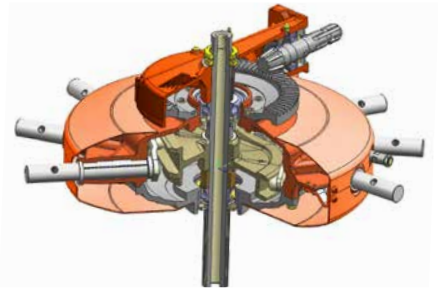

Maintenance-friendly CompactLine rotor head within a fully enclosed housing.

ProLine
The Kubota ProLine rakes feature a unique drive system, which comprises an oil-immersed pinion and crown wheel. The fully enclosed design ensures full and permanent lubrication, and makes the entire system absolutely maintenance-free.

Our extensive experience guarantees well-proven technology of the highest standard. The hardened cam track is adjustable and with an extremely large 400mm diameter, giving positive guidance to the steel rotors and quiet machine running.

The optimised shape of the cam track allows the tine arms to lift higher, leaving a more uniform swath formation which ensures a faster drying process. Aluminium bearing housings, with two widely spaced ball bearings, provide solid and maintenance-free tine arm mounting. Additionally all tine arms including the housing can be removed by simply removing 3 bolts. Fast and easy!

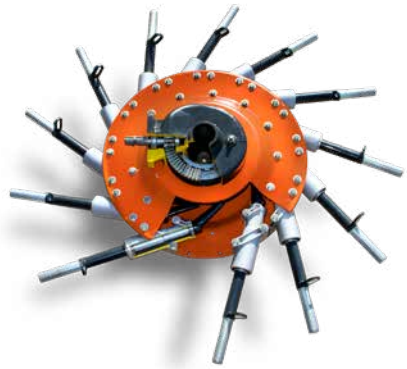

Maintenance-free ProLine rotor – fully enclosed and permanently lubricated rotor gear.

Excellent ground following

Kubota rotary rakes are designed to produce well-shaped and clean swaths, achieved by precision in every part of the raking. The ground contour following ability is important to avoid dirt in the swath - especially in uneven field conditions.

TerraLink Quattro
The TerraLink system consists of two parts. First the lifting arm and second the undercarrier. The arm is slotted on the lower side. This, together with special steel quality, makes it possible for the frame to flex without breaking.

The undercarrier, with a minimum of 4 (Quattro) wheels, guides the rotor perfectly over the ground. TerraLink is a simple system without a complicated and maintenance-intensive cardanic system.

Thanks to the pre-pressure on the front tires during work, the running characteristics is very smooth, also in very uneven conditions.

TerraLink offers 4-fold advantages:
The TerraLink system offers clear advantages over pivoting linkage systems:

- Maintenance-free system - no pivots or joints to wear out.
- Automatic rotor suspension, ensuring smooth operation.
- Built-in pressure bias on front wheels prevents lifting and tine bounce.
- Optimal ground following for clean raking at high forward speeds.
  All wheels are positioned close to the tines.

The rotors are fully flexible in all directions, which means the tines have an exceptional ground following ability...

Did you know?

Did you know that Kubota produces its own engines and that Kubota is the global market leader for industrial diesel engines under 100 hp? You might be surprised to learn under which bonnets Kubota engines are at work. Top quality and efficiency are the main ingredients of this success.

Adaptation in 3 dimensions
These high performance rakes are fitted with the TerraLink Quattro wheel system for superb ground contour following. The TerraLink Quattro system controls the rotor in 3 dimensions, with a unique combination of an undercarriage with 4 wheels and a specially designed rotor suspension system. This ensures superb raking performance, even at higher forward speeds.

TerraLink Quattro is a maintenance-free system - no pivots or joints to wear out.

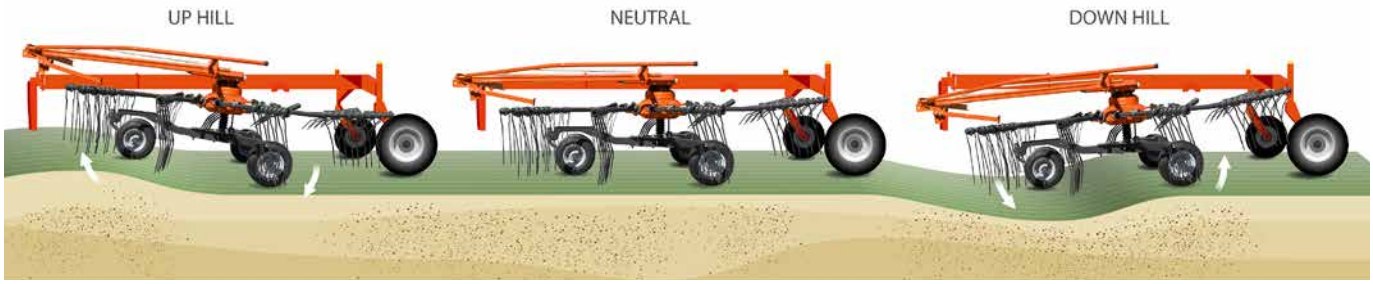

... ensuring a clean raking result without dirt in the crop.

#RA4515 Plus

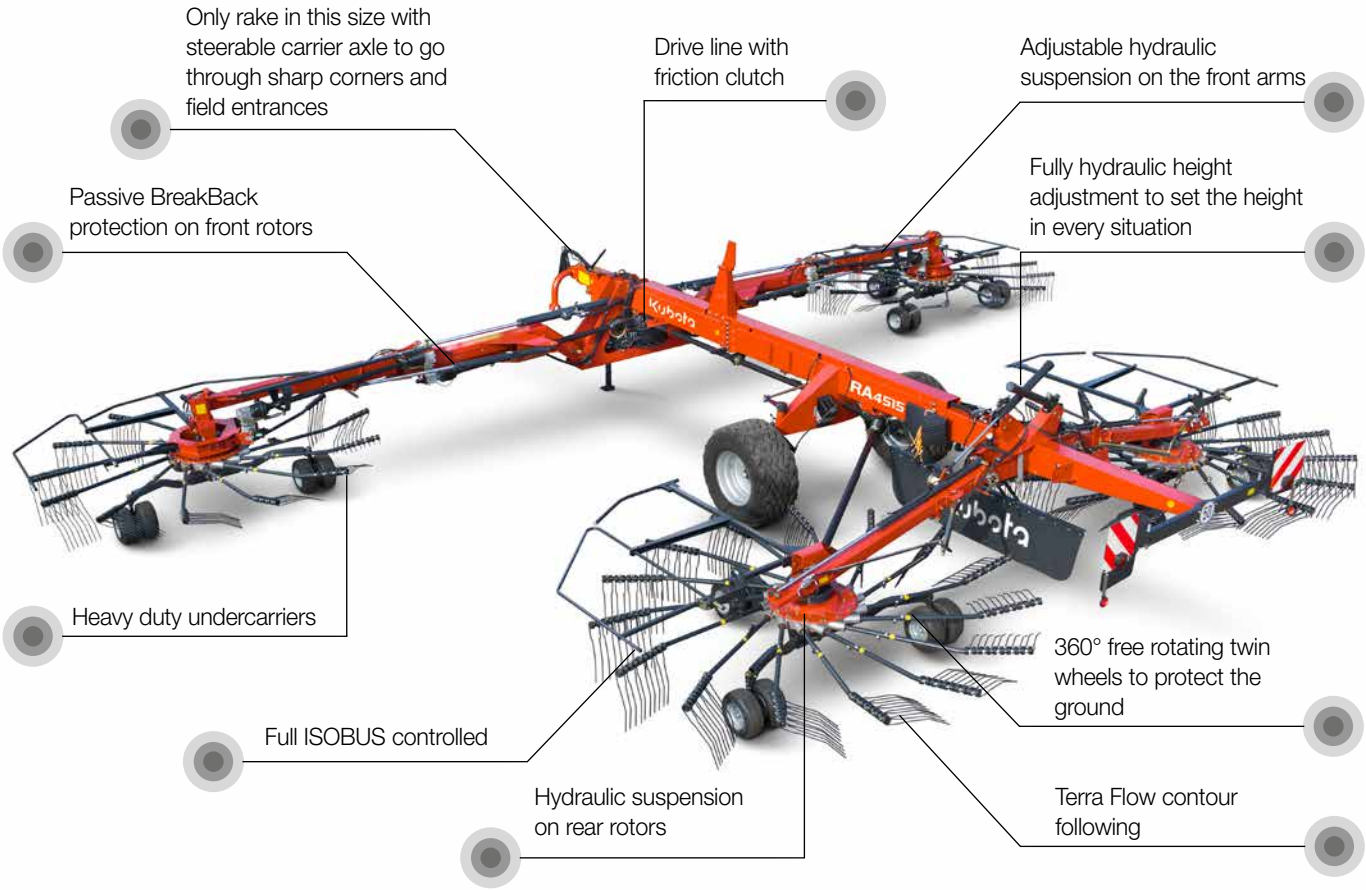

This is efficiency: 15 meter working width

Kubota RA4515 Plus is designed for high output and heavy use.
Four rotors, maintenance-free ProLine gearbox, 15m working width and heavy duty mainframe design underline its potential as a rake for the most demanding customer segment.

The unique elbow construction positions the front rotors close to the driver for excellent overview.

The elbow design makes the difference
The special elbow design of the front rotor arms is a unique feature of the RA4515. Raking width can be matched to differing crop characteristics, to obtain an evenly shaped and equally wide swath across the full width.

The design also allows quick working width adjustment. In case of contact with an obstacle, the overload protection on the outer arm ensures that it folds back at a certain pressure, securing the main frame structure from damage.

Also when raking along borders, the fast moving front arms can be used to steer along fences etc. without slowing down. Especially while raking corners, it is possible to clean them in one go as the front rotor can be pushed into the corner.

The biggest benefit of the system is that the next swath will still be straight, as the rotor towards the non-raked area stays in position. When passing obstacles in the field, the front rotors can quickly be moved inwards, ensuring the swaths stays straight.

#RA4515 Plus

Unbeaten flexibility

Tackle the terrain
The front rotors are fitted with hydraulic ground pressure control for constant adjustment of ground pressure. Regardless of chosen working width, ground pressure remains even, allowing the rotor to instantly react to uneven field conditions for accurate tracking.

The advantages are obvious, as it leads to less damage and faster regrowth from the stubble and minimum dirt into the crop. Especially in wet conditions the low remaining weight on the rotor is a big advantage in order to get clean crop.

Adjustable hydraulic suspension on the front arms and fixed hydraulic suspension on the rear rotors takes the weight away from the undercarrier The hydraulics are operated on load sensing reducing fuel consumption, but also with possibility to run on constant flow.

All four rotors can be lifted individually.

A superbly manoeuvrable unit
The 2-pt headstock allows a turning angle up to 80° and the optional unique steered wheel axles ensure these Kubota rakes have unequalled maneuverability. Despite a total length of 9.20m, even narrow gateways or approach lanes to fields are easily negotiated.

For easy headland management it is possible to tailor the sequence of lifting and lowering the front and rear rotors, to optimise the delay between front and rear rotors. Three different possibilities can be chosen. All 4 rotors can be lifted individually, allowing you to rake any size or shape of field in a professional and efficient way.

Each rotor can be independently and hydraulically set for height. A minimum height can be mechanically adjusted as well, to secure a correct setting.

High lift of rotors ensures generous clearance during headland turns. Clearance height can be adjusted.

Brakes and tyres
The wide tires not only ensure gentle treatment of the ground, but also makes for excellent stability both in the field and on the road. Hydraulic or pneumatic brakes permit road speeds up to 40km/h.

All rotors are equipped with three pairs of wheels, which can rotate 360°, for perfect guidance and no danger of damage to the sward even when making the tightest turns.

#RA4515 Plus

Absolutely customizable

Raking width can be continuously varied on the move between 9.80m and 15.00m. Raking width can be matched to the density of crop to obtain an evenly shaped and equally wide swath over the full length. Working width can be adjusted, either during work or while stationary with rotors on the ground. If the width needs to be adjusted temporarily, the previously set working width can be recalled automatically.

Everything under control with ISOBUS Technology
The Kubota RA4515 Plus is fully ISOBUS compatible. This means that it will be plug and play with an ISOBUS compatible tractor without the need for a separate terminal.

The Kubota RA4515 Plus is available with the IsoMatch Tellus 1200 or the IsoMatch Tellus 700 control terminals. The IsoMatch Tellus 700 is especially developed for controlling machines in a simple way. Just connect your machine, step into the tractor cab, switch on the power button and GO. The terminal brings the implement automatically into view. To maximise user comfort all buttons are positioned on the right hand side of the terminal. No need to look at the touchscreen when operating the machine.

Did you know?

Did you know that Kubota is not only one of the top-50 most recognised brands in Japan, but also one of the largest tractor manufacturers in the world? In 2014 alone, Kubota produced more than 180,000 tractors.

IsoMatch joystick.

Take full control

The following functions can be operated with the terminals:

- Swath and working width.
- Programmable lifting height of rotors.
- Automatic selection of transport or working position by pressing an icon.
- Separate lifting of all four rotors.
- Setting of rotor height.
- Adjustment of working width, left and right hand side.
- Active and selectable hydraulic suspension on front rotors.
- Steering of transport axle.
- Headland management activation.
- Adjustment of delay time/meters or manual operation of headland managment.
- Special customized user interface, developed with contractors, for very simple control of functions.
- Optional with joystick.

The two outer rotors can be adjusted individually to obtain working widths between 9.80-15.00m.

Hydraulic suspension of front lift arm and Break-Back system.

The optional active steering wheel provides excellent manoeuvrability during narrow gateways.

With its clever folding mechanism the total height remains below 4.00m - despite a rotor diameter of 3.85m. And there is no need to remove tine arms for road transport.

#RA4513 Plus-RA4513 Pro Plus

ProLine: efficiency simplified

The Kubota 13m 4-rotor rake is offered with ProLine gearbox. For heavy duty conditions, the RA4513 Pro Plus ProLine machine has been developed. Kobota RA4513 Pro Plus is targeted at making lighter work of tough and demanding operations. Being able to accurately feed the following machine and keeping up efficiency of the complete harvesting system is an essential part of the raking job. With their impressive capacity of 12.50m working width, straightforward design and possibility to adjust both work and swath width, these machines are designed to boost the complete process of collection and pick-up, adjusting to the changing crop intensity during the season.

Easy handling – more productivity
Kubota 4513 Plus is designed with uncomplicated work days in mind. Forget about sophisticated sensors and control functions, they are designed around the operator with simplicity in mind, focusing on the elements that add real value. Take the control unit for instance. It comes with a rather handy design including pre-selected functions for an array of easy operations. Only one double and one single acting spool valve are required to run RA4513 Plus.

More uptime with max 4m transport height
No reason for wasting time, not even when moving between fields. Just raise the rotors and off you go, safely below 4.00m transport height – no need to leave the tractor for removing tines arms. Large transport wheels and hydraulic brakes are standard. Kubota RA4513 Pro Plus tine arms are generally fixed, but the top 4 are optionally detachable, to reach same low storage height.

Excellent swath formation
To prevent an uneven appearance of the swath and to keep capacity up, the rear rotors are smaller in diameter and have one arm more. This secures the additional capacity needed on the rear rotors for the double volume, and as the rear rotor with one more arm, it also prevents roping.
The maintenance-free TerraLink Quattro rotor suspension system, operating in 3 dimensions for excellent tracking, works in close combination with the 4 wheeled rotor to ensure high accuracy and stability on slopes. And it is absolutely maintenance- and wear-free.

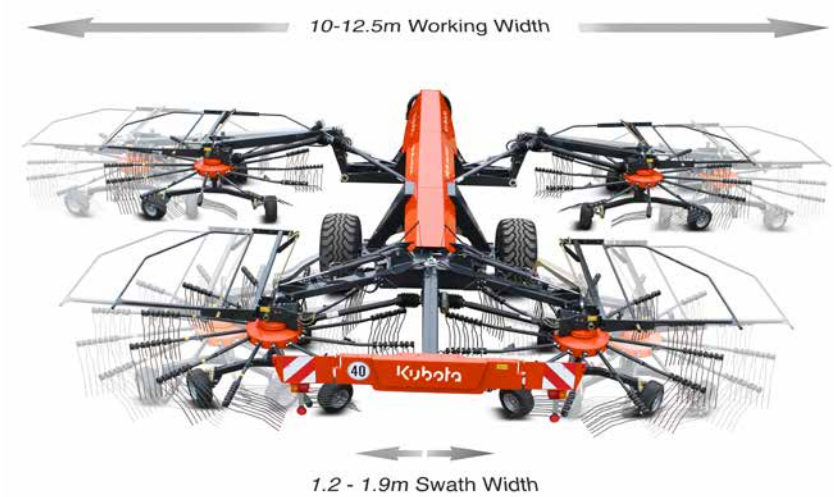

#4513 Plus

A clear advantage: compact but capable

The hydraulic adjustment of working and swath width allows you to customise swath intensity and width to the capacity of the following machine. All conveniently handled and controlled from the tractor seat. The working width can be set between 10-12.50m and swath width can be adjusted between 1.20-2.20m, adding the necessary flexibility.

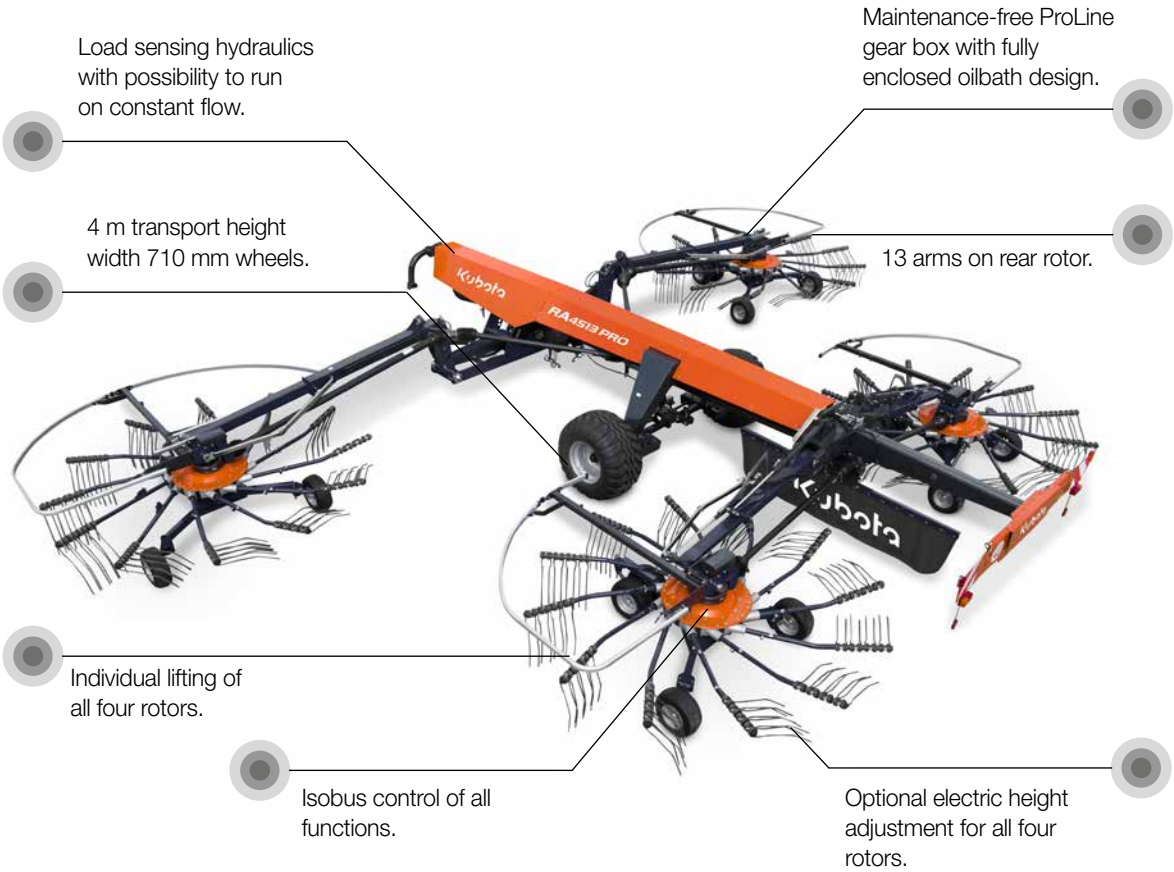

Easy and intuitive control function, all handled from the tractor cab.

Easy headland management
These machines come with enhanced headland management. In addition to high ground clearance of rotors during headland turns, it is possible to tailor time delay between lifting/lowering the front and rear rotors to driving speed and field conditions. This is done mechanically in an easy and uncomplicated way.

RA4513 Plus can make sharp turns of up to 80°, both on headlands and during transport when entering narrow gateways.

The rotors can as a standard feature lift in pair, convenient for raking crop away from fence lines or when raking low crop fields. Optionally the front rotors can be lifted individually.

Working width can be set hydraulically between 10-12.5m. Swath width is also set hydraulically between 1.2 and 1.9m.

High lift of rotors ensures generous clearance during headland turns.

The tough and sturdy rakes

With adjustable working widths ranging from 7.00m to 9.00m, these heavy duty specification rakes provide the swath formation capability to keep harvesting operations running at their optimal output. At the heart of all models is a heavy duty rotor head system. Proven to perform year in, year out in heavy first cut crop, it is superbly engineered, with the crown wheel and pinion assembly running in a fully enclosed oilbath.

ProLine tines with 10mm diameter.

RA2580 - design optimized for transport
RA2580 excels both with its extensive working width and compact transport dimensions. The new design of the wheel axles allows for the addition of generous 380/55 wheels as standard, whilst still offering a narrow outer track width, making it the perfect match for narrow roads and tight gateways. Transport height is below 4.00m, even with all tine arms attached. No need to leave the tractor, just fold and go.

Add in the 80° turning headstock and active wheel steering, and you have a highly maneuverable machine both on the road and in the field.

Flexible working width
RA2580: 7.00-8.00m working width.
RA2584: 7.60-8.40m working width.
RA2590 Hydro: 8.00-9.00m working width.

With 9.00m working width and transport height below 4.00m, even without detaching tine arms, the RA2590 Hydro offers remarkable productivity with no downtime.

Kubota RA2584 is converted hydraulically for transport position from tractor cab.

On-the-go rotor height adjustment
A ComfortKit is optionally available for the RA2580. This includes a hand-held joystick control that brings all control functions into one. The height of each rotor is controlled electronically, and the actual height of each rotor is shown on the screen of the control box. In this way you can finely tune the rotor height, improving your work result is easily done on the go.

A screen indicator shows the actual height in percent. It is as well also possible to set a personal zero point, to prevent raking too deeply. In addition the kit includes individual rotor lifting. It is possible to adjust the rotors together or individual in all positions.

Excellent maneuverability
The rear carrier frame with controlled steering facility gives this rake excellent track following characteristics, allowing tight turns on headlands and loss free swathing even in awkwardly shaped fields. Even if the rotors are lifted on a steep slope, the steering system reliably counteracts any deviation. During headland turns the rotors are lifted up to 45cm from the ground to prevent swath damage.

- Actively steered wheels for excellent tracking.
- Ability to make sharp turns up to 80°.
- High lift of up to 45cm of rotors ensures generous clearance during headlands turns.
- Single side lift: Raking with only one rotor (standard on RA2590 Hydro, optional on RA2580 and RA2584).

RA2590 Hydro – high capacity in field, compact on the road
RA2590 Hydro will go as wide as 9.00m during work with its twin rotors, and offers the flexibility to adjust the working width between 8.00-9.00m. It remains below 4.00m during transport, even with all tine arms fully mounted.

Thanks to the hydro axles which are a unique Kubota feature, the complete rake can be lowered hydraulically for transport, ensuring that it will go below 4.00m transport height. Another benefit is that the centre of gravity is lowered, and in combination with the wide track width and large 380/55-17 tyres it creates excellent weight distribution and stability during transport.

#RA2064-2072-2072 HYDRO-2076

High performance: compact centre swath rakes

Kubota offers a range of cost-effective two rotor rakes with strong design. The rakes produce a nice even centre swath with raking widths between 6.20m and 7.80m. They are mounted on a strong and stable frame to ensure long lifetime. Features such as actively steered wheels, the TerraLink Quattro system and hydraulic working width adjustment are standard - except for the low cost entry level model RA2064.

Easy setting of correct raking height.

Unique manoeuvrability
The rear carrier frame with controlled steering facility allows tight turns on headlands and loss free swathing even in awkwardly shaped fields. When in headland position, an outstanding lifting height of 45cm prevents swath damage. The ability to make sharp turns up to 80° and the cross stabilizer in the headstock are Kubota features. These double rotor rakes offer hydraulically adjustable working width. This enables varying the swath width from 1.20-1.90m, ensuring a perfect match to the pick-up width of loader wagons, balers and foragers.

The ability to make sharp turns up to 80° and the cross stabilizer in the headstock are Kubota features.

The hydraulic adjustable rotors on RA2076 can be set between 7.00m…

…and 7.80m working width.

RA2072 Hydro – resetting the standard
The RA2072 Hydro is fitted with hydraulically operated axles on the main frame, in order to lift and lower the machine during transport and operation. This feature significantly reduces transport height by 40cm, allowing a transport height as low as 3.45m leaving all arms attached.

Add in features such as adjustable working width of 6.20-7.20m, TerraLink Quattro ground contour following and heavy duty carrier frame design, and the result is low maintenance, higher productivity and maximum operator comfort.

All main functions, such as lifting and lowering of main frame and rotors are operated from the tractor cab, using an electro-hydraulic handheld control. It is also possible to pre-select lift activation of the rotor units via the terminal. Such an integrated solution is offered only by Kubota.

To limit transport height further the tine arms can be removed on RA2076. The swath board folds up automatically.

Single rotor activation is optionally available. Standard on Hydro version.

#RA2064M

High manoeuvrability: comfortable dimensions

The CompactLine Kubota RA2064M with its three point linkage mounting provides unrivaled maneuverability for accessing narrow roads and tight gateways. The mounting makes the RA2064M then an ideal fit for mastering small and awkwardly shaped fields. With its working width of 6.4m and 3.05m rotor diameter, it is suitable for raking 2x 3.2m mower swaths into one row.

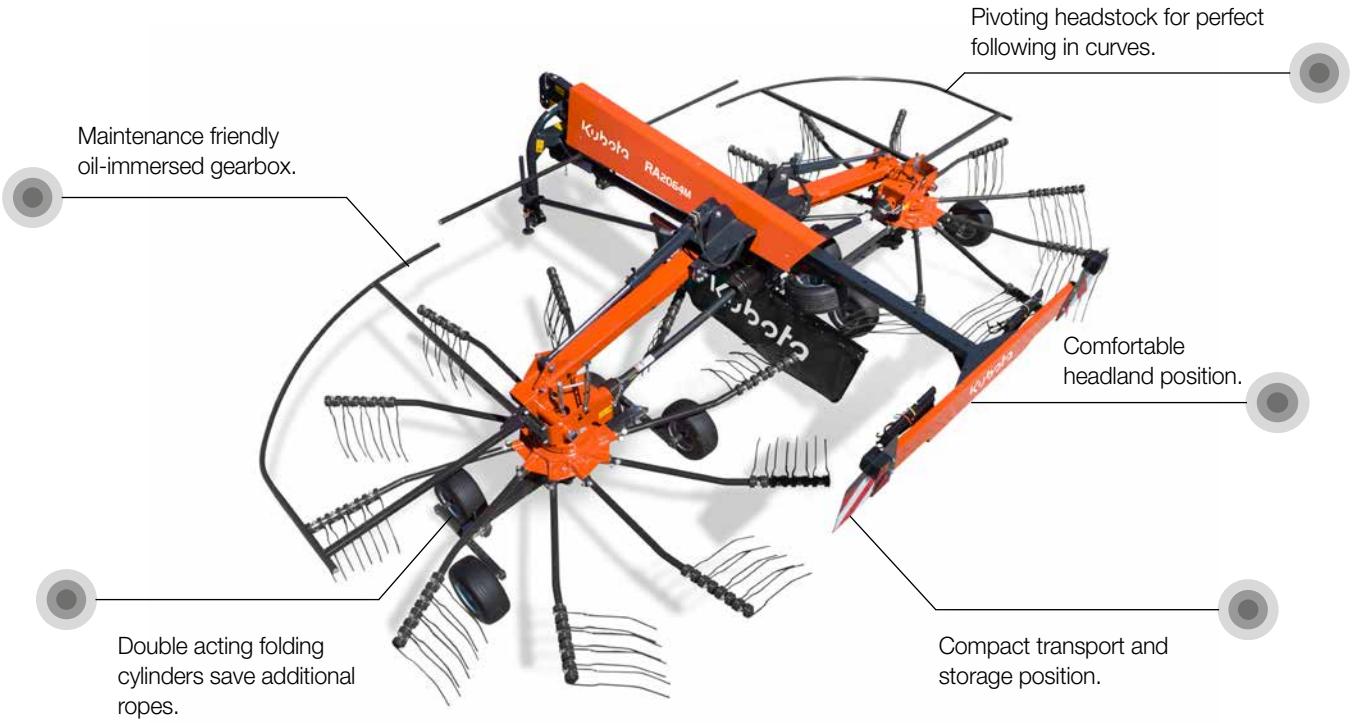

Tandem axle (optional).

Height adjustment.

The Kubota RA2064M is set-up with simple technology:

- No ropes for transport locks.
- Only two positions, folded or unfolded (double acting cylinders).
- No mistakes while operating.
- No need to operate with hydraulic valve during work.
- Easy headland lift with 3 point linkage.
- Outstanding clearance in headland position.
- Pivoting headstock to guide the machine freely along the field contour.
- Fixed wheels can be used.
- Together with stabilizers, it ensures a perfect performance also on hillside.
- Optional tandem wheels can provide enhanced ground following.

More flexibility in storage as no tine arms need to be detached.

Narrow and short transport position without leaving the cab.

Better ground adaptation compared to larger single rotor rakes.

High flexibility on the road, and in the field, as no carrier frame is running on the crop.

#RA2577

Excellent flexibility and obvious side effect

The RA2577 ProLine double rotor rake delivers a working width of 7.70m. The side delivery concept adds excellent flexibility in swath formation and allows you to collect crop from a working width of up to 15.00m into one swath. The high built mainframe concept offers excellent ground clearance in headland position (40cm). Actively steered wheels allow sharp turning, both on headlands and during transport when passing narrow gate ways.

RA2577 is fitted with the renowned ProLine rotor gearbox, with its maintenance-free oilbath solution. The shape of the massive 400mm cam track allows the tine arms to leave the crop faster, leaving a more uniform swath shape. In addition the rotors feature 12 tine arms on the front rotor, each with 4 tines, and 13 tine arms, each with 5 tines on the rear rotor. This ensures more accurate raking performance and allowing higher forward speed.

The carrier frame features a lower position of the rear frame. The rotor wheels of the undercarriage are positioned further to the back of the rotor for improved ground contour following under difficult circumstances. In addition RA2577 is fitted with the Kubota TerraLink Quattro wheel system for superb ground contour following. This system controls the rotor in three dimensions.

Active wheel steering for improved manoeuvrability in combination with large wheels for reduced compaction.

The side delivery concept allows you to collect crop from 15.00m into a single swath.

The low position of the rear frame ensures excellent stability.

Side Delivery Rakes: Proactive Performance

The Touch-Down-Effect, comparable to an aircraft's approach angle of its landing gear, ensures smooth and clean raking, but with lifting to a ground clearance of around 500 mm avoids that swaths on headlands are damaged.

The Kubota RA2070 Evo + Vario, a carried side delivery rake, delivers flexibility in raking, more comfort in operating and higher quality of forage due to the new TerraLink Plus rotor attachment.

Higher Quality of Forage
With the updated feature "Terralink PLUS", the cardanic rotor attachment benefits with a further advanced ground adaptation of 8°.

The Touch-Down effect in combination with Terralink Plus rotor mounting makes for smooth running and minimal soil inclusion in your forage, maximising forage quality, milk yields and animal health. In addition, 380mm guide wheels protect the sward from damage.

Vario two swathing.

Tamdem wheels (optional).

Hydraulic transport locking (optional).

Flexibility in Raking:

- Unique rotor setup with a smaller rotor in the rear in combination with one more tine arm secures a perfect swath under all conditions
- Improved steering geometry
- Steered tandem axles on the front and fixed on the rear ensure a smooth running also in difficult conditions
- Perfect view towards left side of swath distribution
- Automatic swath forming
- Vario enables to place two swaths, either for small balers in high crop volume or for night swaths to increase hay quality

More Comfort in Operation is delivered by:

- Easy connecting of the machine
- Automatic folding of the swath board
- Optional hydraulic transport locking
- Improved steering that gives you better maneuverability in the field
- Options like tandem axles support customizing the machine for individual requirements

Automatic foldable swath board with parking stand.

Transport heigh below 4.0m.

Ground clearance >500mm.

Vario Model. Possibility to make “two” swaths. One large single swath or two smaller night swaths.

Maintenance-friendly CompactLine gearbox with fully enclosed oil bath design.

Automatic folding of swath board by gravity without hydraulic control.

Terralink PLUS stands for a flexible rotor attachment gives enhanced ground adaptation supported by the “Touch-Down-Effect”.

New steering geometry allows narrower turns than previous model with close to 80° steering angle. Ground clearance in headland position > 500 mm.

Optional tandem axles available. steered for front and fixed for rear rotor.

#RA2071T EVO

Did you know?

Did you know that our parts are manufactured to the same high standards and strict specifications as the Kubota machines? Genuine parts will always work and fit as intended, and are guaranteed to keep your machine running at maximum performance.

With 50cm lifting height, swaths can be driven over with no problem at all. Rotors are lifted using only a single acting valve.

Storage for the hydraulic lines.

Leaver to select swath-placement and activate stop in central position.

Lot of options are available to customise the machine.

The entrance to flexibility and capacity in raking

Flexible raking performance
The Kubota RA2071T EVO is built for versatility in varying field conditions. Its twin rotors operate independently, allowing you to form either one large swath or two smaller ones. For high-volume raking, the rotors can combine two swaths into one — gathering up to 12.5 m of crop in a single pass. Features like QuickLift for easy headland turns, Swivel of the rear rotor, and the TerraLink system for smooth ground contour following make this rake a reliable and efficient choice.

Compact and clever design
The Kubota RA2071T EVO features a compact frame for excellent maneuverability and optimal rotor overlap. With no transport frame needed, the machine rides on its rotor wheels — ready for road travel fully mounted. The 50 cm headland lift clears large swaths with ease, and height adjustment is integrated into the lifting cylinders. The rear rotor's TerraLink frame connects at the ideal pivot point above the front rotor for smooth following and clean raking. Hydraulic swath board lift is rope-operated, and the advanced underlink connection with double wide-angle PTO ensures tight headland turns.
Optional extras include land wheels, tine savers, and a front swath board for placing two perfect individual swaths.

Pulled axles ensure smooth handling and low frame stress on both road and field.

Compact transport & smooth travel
Simply swivel the rear rotor to the center — a built-in limiter helps guide it precisely, with a middle stop for easy alignment. Place the leaver in center position, the stop is deactivated, making it ideal for steering or storing the machine in tight spaces. On the road, the rake stays under 3 m wide fully mounted, and just 2.45 m width tine arms removed — perfect for shed storage. The pulled undercarrier axle ensures smooth running and minimizes frame stress, even on rough roads.

Consistent raking quality
Raking performance is central to the design. With 11 tine arms in front and 12 in the rear, the machine offers high capacity and forms a uniform swath — ensuring clean pickup and top-quality forage at the right time.

Two swath options flexible raking for efficient crop handling.

#RA2071T VARIO

Premium raking solution

Smart design for clean fields and happy cows
The Kubota RA2071T Vario builds on the proven EVO concept with smart upgrades: 11 tine arms in front and 12 in the rear ensure perfect swath shape. The hydraulic swiveling of the rear rotor allows flexible swath formation — single or double. Tandem wheels on both rotors provide smooth ground tracking, and the 50cm headland lift keeps swaths undisturbed. Premium features like the unique front rotor SideShift and TerraLink Plus flotation system deliver precision in tough terrain. All functions are controlled from the cab via the pre-selection box — no ropes. Designed to make your work easier — and your cows happier.

Kubota SideShift – clean raking, less crop damage
The Vario version offers the SideShift system as standard, which comprises electro-hydraulic control of all functions. SideShift offers the possibility to shift the front rotor in addition to the rear. It lets the rotor run right of the tractor, ideal for raking near trees or wet spots without driving too close. This reduce damages on the tractor — especially in soft soil — helping to minimize ash contamination and crop loss. Another unique possibility thanks to the SideShift is to reduce the driving on top of the crop shifting the front rotor to the left. Specially with soft soil this is reducing Ash contamination and crop loss a lot.

TerraLink Plus flotation system
The rear carrier frame with controlled steering facility allows tight turns on headlands and loss free swathing even in awkwardly shaped fields. When in headland position, an outstanding lifting height of 45cm prevents swath damage. The ability to make sharp turns up to 80° and the cross stabilizer in the headstock are Kubota features. These double rotor rakes offer hydraulically adjustable working width. This enables varying the swath width from 1.20-1.90m, ensuring a perfect match to the pick-up width of loader wagons, balers and foragers.

The Kubota RA2071T Vario with 7.10m working width in double swath position.

SideShift to the right - easy cleaning of borders with perfect view on the rotor.

SideShift to the left - raking without driving on the crop.

TerraLink Plus ensures smooth rotor movement and precise ground tracking for optimal raking.

High end features
The Vario as the Evo is standard equipped with tandem wheels on both rotors. In addition the machine comes standard with the land wheel on the drawbar supporting a perfect ground tracing in SideShift positions. The rear rotor is on top equipped with inner land wheels, securing a perfect tracking of the ground. All this allow the RA2071T Vario to operate in all type of field. It is the only rake supporting you to reduce driving on the crop. We understand how to create high quality forage.

Easy adjustment of rotor height in the back.

Full control from the cab — no ropes, just smart raking.

#RA1546

Reliable, rugged design: high performance

Kubota ProLine single rotor rakes feature a gearbox design with excellent performance. Features such as oscillation dampers, tandem axles and HydroLift height adjustment are hallmarks of ProLine single rotor rakes.

ProLine gearbox
Kubota single rotor rake models are based on the ProLine gearbox technology and have working width of 4.60m respectively and are fitted with the Kubota ProLine gearbox, with its maintenance-free oilbath solution.

The ProLine gearbox ensures excellent swath formation. The shape of the massive 400mm cam track has been perfected to allow the tine arms to leave the crop faster, leaving a more uniform swath shape.

Both rakes are fitted as standard with both four wheel tandem axles and oscillation dampers, offering excellent ground contour following, minimising the amount of dirt collected in the swath.

ProLine oilbath gearbox design ensures maintenance-free operation. Tine arms can be easily removed.

For transport or storage, the rotor guard frames are folded up close to the main frame, locking automatically into position. An assistor spring linked to the swath board reduces the effort required.

HydroLift concept
A unique feature of RA1546 is the HydroLift concept. It is a hydraulic height adjustment system that allows the driver to quickly adjust working height to different ground conditions from the tractor cab. With the unique possibility of setting a minimum height.

As an option these rakes can be supplied with a third wheel, to ensure even better flotation.

Infinitely variable cam track adjustment allows fine tuning, to obtain optimal raking and swath formation according to crop conditions.

Standard oscillation dampers ensure excellent running characteristics.

#RA1032-1035-1039-1043

The compact range: machines for smaller tractors

For smaller raking operations, Kubota offers several models designed for use on lower horsepower tractors, whilst delivering similar raking performance compared to its higher specification machines. With the pivoting three point linkage machines and also two trailed versions, there is a model to suit any need, from lowland farmers, to users working on steep hillsides.

Kubota 'Compact' rotor head
The rotor head is grease lubricated. Within a fully enclosed housing, the maintenance-free cam track and cam followers are running permanently lubricated in an oilbath. The rotor shaft and pinion shaft are all mounted on two bearings for maximum strength and long service life.

All rakes can be set for reduced transport and storage width by removing the tine arms and placing them on the carrier frame.

As an option these rakes can be supplied with a third wheel, to ensure even better flotation.

RA1032 – compact entry-level 3.20m rake with a weight of only 320kg.

RA1039 – 3.90m working width, weighing 460kg.

Curved tine arms
All Kubota CompactLine rakes feature cranked tine arms for significantly cleaner raking performance and optimised swath formation. This design ensures that the row of tines on each tine bar has a more effective approach angle to the oncoming crop, and also gives a cleaner lift out of the tine from the formed swath.

RA1043 – 4.30m working width with a weight of 490kg.

A pivoting 3-pt headstock ensures perfect ground following performance, and perfect tracking when cornering. Oscillation dampers are optionally available.

Kubota Farm Solutions

360º performance for 100% success

We understand that you need more than a powerful tractor to succeed: namely, an integrated system of products and services to increase your competitiveness and preparation for the future. With Kubota Farm Solutions, we have brought together our solutions in a system – and targeted our proposition to you. From intelligent technology to individual services, the Kubota Farm Solutions advantages complement each other, forming a circle that ends where it begins: with our commitment to support you a little better every time, now and in the future.

Kubota
TERRALINK
2564
Kubota
Kubota

Technical data

Model		RA1032	RA1035	RA1039	RA1043	RA1546	RA2064
CompactLine		●	●	●	●	-	●
ProLine		-	-	-	-	●	-
Dimensions & weight							
Working width	(m)	3.20	3.50	3.90	4.30	4.60	6.35
Transport width	(m)	1.60	1.75	1.75	2.10	2.15	2.80
Transport length	(m)	3.10	3.35	3.60	3.85	3.35	5.90
Parking height	(m)	1.60	1.70	1.85	2.00	2.75	3.85
Weight	(kg)	315	420	460	480	670	1510
Swath width appr.	(m)						1.20
Capacity theo.	(ha/h)	3.5	3.9	4.3	4.7	5.1	6.9
Hitching system							
Pivoting 3-pt headstock	(CAT)	1/2	1/2	1/2	1/2	2	-
Lower links (2-pt.)		-	-	-	-	-	●
Linkage drawbar		-	-	-	-	-	-
Gauge wheel 16°		o	o	o	o	o	-
Rotors/Tine arms/Tines							
Rotor diameter	(m)	2.60	2.80	3.05	3.35	3.65	3.00
Swath delivery		left	left	left	left	left	centre
Number of rotors		1	1	1	1	1	2
Number of arms per rotor		9	10	11	12	13	10
Number of double tines/arm		3	4	4	4	4	4
Tine diameter	(mm)	9	9	9	9	10	9
Continuous cam track		-	-	-	-	●	-
Detachable tine arms		●	●	●	●	●	-
Height adjustment		rack trail	mech.	mech.	mech.	hydr.	mech.
Wheels and axles							
Tyre (rotors)		15x6.00-6	16x6.50-6	16x6.50-6	16x6.50-6	16x6.50-6	16x6.50-6
Fixed tandem axle		o	o	o	o	●	o
Pivoting tandem axle		-	-	-	-	o	-
Stand. tyres (carrying frame)		-	-	-	-	-	10.0x75-15.3
Opt. tyres (carrying frame)		-	-	-	-	-	-
Optional equipment							
Carrier arm compensating		o	o	o	o	●	-
Locking catch for slopes		o	o	o	o	●	-
Safety accessories							
Warning panels		o	o	o	o	o	●
Road lights		o	o	o	o	o	●

o option ● standard

* = Double swath ** = With detached tine arms and lowered headstock *** = Hydraulically lowered main frame

RA2064M	RA2070 VARIO	RA2070 EVO	RA2071T VARIO	RA2071T EVO			
●	●	●	●	●			
-	-	-	-	-			
6.40	6.65/7.85	6.65	6.60/7.10*	6.60/7.10*			
2.85	2.80	2.80	2.20**/3.00	2.20**/3.00			
3.85	8.65	8.65	7.40**/8.20	7.40**/8.20			
3.81	3.5**/3.99	3.5**/3.99	-	-			
1200	2240	2300	1400	1350			
1.20							
6.9	7.6/8.7	7.6	7.3	7.3			
-	-	-	-	-			
●	●	●	-	-			
-	-	-	●	●			
-	-	-	●	○			
3.05	3.35/3.23	3.35/3.23	2.95	2.95			
centre	left	left	left	left			
2	2	2	2	2			
10	11/12	11/12	11/12	11/12			
4	4	4	4	4			
9	9	9	9	9			
-	-	-	-	-			
-	●	●	●	●			
mech.	mech.	mech.	mech.	mech.			
16x6.50-6	16x6.50-6	16x6.50-6	18.5x8.50-8	18.5x8.50-8			
○	-	-	○	○			
-	-	-	-	-			
-	380/55-17	380/55-17	-	-			
-	-	-	-	-			
-	-	-	-	-			
-	-	-	-	-			
●	●	●	●	●			
●	●	●	●	●			

Technical data

Model		RA2072	RA2072 HYDRO	RA2076	RA2577	RA2580	RA2584
CompactLine		●	●	●	-	-	-
ProLine		-	-	-	●	●	●
Dimensions & weight							
Working width	(m)	6.20/7.20	6.20/7.20	7.00/7.80	7.70	7.00-8.00	7.60-8.40
Transport width	(m)	2.80	2.80	2.80	2.85	2.80	2.98
Transport length	(m)	5.90	5.90	5.90	8.90	5.95	6.25
Parking height	(m)	3.85	3.45***/3.95	3.45***/4.10	3.70***/4.10	3.41/3.90	3.45***/4.10
Weight	(kg)	1640	1680	1640	2160	2065	2285
Swath width appr.	(m)	1.20-1.90	1.20-1.90	1.30-1.90		1.20-2.20	1.40-2.10
Capacity theo.	(ha/h)	7.5	7.5	8.4	8.5	8.8	9.2
Hitching system							
Pivoting 3-pt headstock	(CAT)	-	-	-	-	-	-
Lower links (2-pt.)		●	●	●	●	●	●
Linkage drawbar		-	-	-	-	-	-
Gauge wheel 16°		-	-	-	-	-	-
Rotors/Tine arms/Tines							
Rotor diameter	(m)	3.00	3.00	3.35	3.65	3.35	3.65
Swath delivery		centre	centre	centre	left	centre	centre
Number of rotors		2	2	2	2	2	2
Number of arms per rotor		11	11	11	12/13	2x12	2x12
Number of double tines/arm		4	4	4	4/5	4	4
Tine diameter	(mm)	9	9	9	10	10	10
Continuous cam track		-	-	-	●	●	●
Detachable tine arms		-	-	●	●	(4)	●
Height adjustment		mech.	mech.	mech.	mech.	mech./hydr. o	mech.
Wheels and axles							
Tyre (rotors)		16x6.50-6	16x6.50-6	16x6.50-6	16x6.50-6	16x6.50-6	16x6.50-6
Fixed tandem axle		o	o	o	-	o	o
Pivoting tandem axle		-	-	-	-	-	-
Stand. tyres (carrying frame)		-	10.0/75-15.3	10.0/75-15.3	380/55-17	380/55-17	380/55-17
Opt. tyres (carrying frame)		-	-	-	-	-	-
Optional equipment							
Carrier arm compensating		-	-	-	-	-	o
Locking catch for slopes		-	-	-	-	-	-
Safety accessories							
Warning panels		●	●	●	●	●	●
Road lights		●	●	●	●	●	●

o option ● standard

* = Double swath ** = With detached tine arms and lowered headstock *** = Hydraulically lowered main frame

RA2590 HYDRO	RA4513 Plus	RA4513 Pro Plus	RA4515 Plus				
-	-	-	-				
●	●	●	●				
8.00-9.00	10.00-12.50	10.00-12.50	9.80-15.00				
2.98	2.99	2.99	2.99				
6.25	8.75	8.75	9.85				
3.50***/3.98	3.45/3.99	3.45/3.99	3.45**/4.00				
2350	4700	4700	6000				
1.40-2.40	1.20-1.90	1.20-2.20	1.40-2.50				
9.9	13.8	13.8	6.9				
-	-	-	-				
●	●	●	●				
-	-	-	-				
-	-	-	-				
3.85	3.05/3.35	3.05/3.35	3.85				
centre	centre	centre	centre				
2	4	4	4				
2x14	4x12/13	4x12/13	13/15				
4	4	4	4/5				
10	10	10	10				
●	●	●	●				
(4)	(4)	(4)	(4)				
mech./Pro el.	mech.	mech./opt. hydr.	hydr.				
16x6.50-6	16x6.50-6	16x6.50-6	16x6.50-6				
o	-	-	Terra				
-	o	o	Contact				
380/55-17	500/50-17	500/50-17	560/60-22.3				
-	-	-	-				
●	o	o	●				
-	-	-	-				
●	●	●	●				
●	●	●	●				

Kubota (U.K.) Limited
Dormer Road Thame, Oxfordshire, OX9 3UN

http://www.kubota.co.uk

Every effort has been made to ensure that the contents of this publication were accurate and up-to-date at the time of going to press.
All rights reserved. No part of this publication may be reproduced in any form by any means, without prior permission of Kubota.
Kubota reserves the right as a manufacturer to amend and update any specification or performance information without notice, if required.

K-4104-UK. Printed 06.2026