Bistro kitchen faucet with spray

BI101XX

Specifications

Descriptions

- Ceramic cartridge
- 3/8" speedway compression
- 2-jet pull-down spray
- Flexible spout

Available colors

- C : Chrome

Available flows

- 8.3 L/min, 2.2 gpm (US) 60psi
- 3.7 L/min, 1 gpm (US) 60psi (**BI101XX-10**)
- 5.69 L/min, 1.5 gpm (US) 60psi (**BI101XX-15**)

Cartridges

- 401-072

Certifications

- CSA B125.1
- NSF61
- ASME A112.18.1
- CMR248 Approval

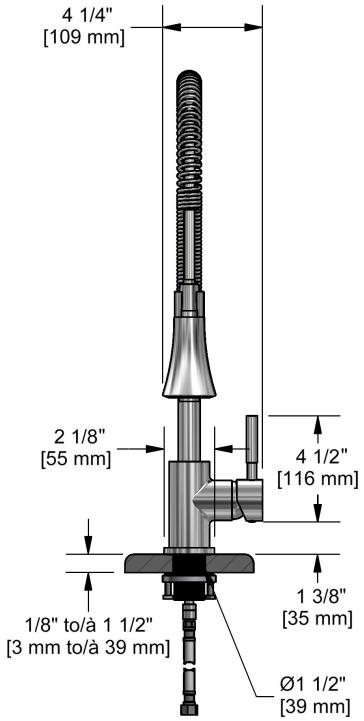

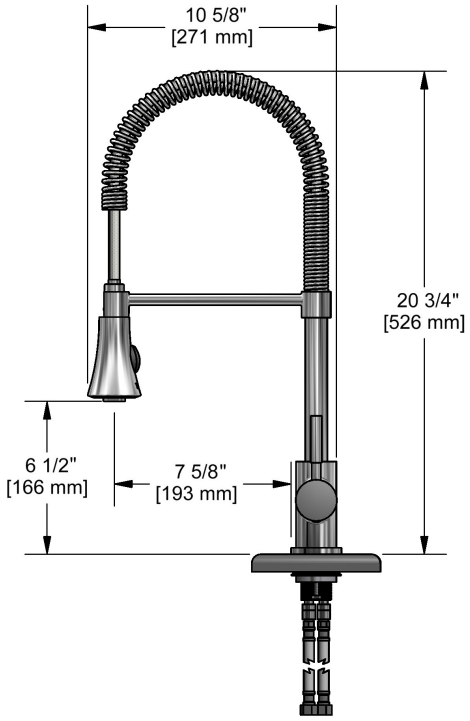

Sizes, models and finishes may differ from thoses presented.

Warranty

The Riobel inc. product carries a limited LIFETIME warranty on the finish Chrome, Gold (PVD), Brushed nickel (PVD), Night brushed (PVD), Polished nickel (PVD) and all working parts and is guaranteed from the initial date of purchase against all manufacturing defects. Other finished 1 year.

Customer Service

Ontario, West Canada : 888-287-5354 Quebec, Maritimes, United States : 866-473-8442

2014.05.07