SIGMA
Designer Faucetry

TechData
SPECIFICATIONS
Series 1400/2400
Nova
Single-hole Vessel
Lavatory Set

1.142318

FEATURES:
- All brass construction.
- Flexible hose connections.
- Includes pop-up drain assembly P/N 18.11.041.
- Concealed aerator requires special supplied blue removal key.
- Pre-assembled handle & escutcheon.
- Cartridge rotates 180º. Replacement cartridge P/N: 18.30.219
- Available in all finishes. Warranty varies according to finish selection.
- Standard aerator is limited to 1.5gpm.
- Certified to meet and exceed the following codes and standards: ASME A112.18.1-2005/CSAB 125.1-2005.

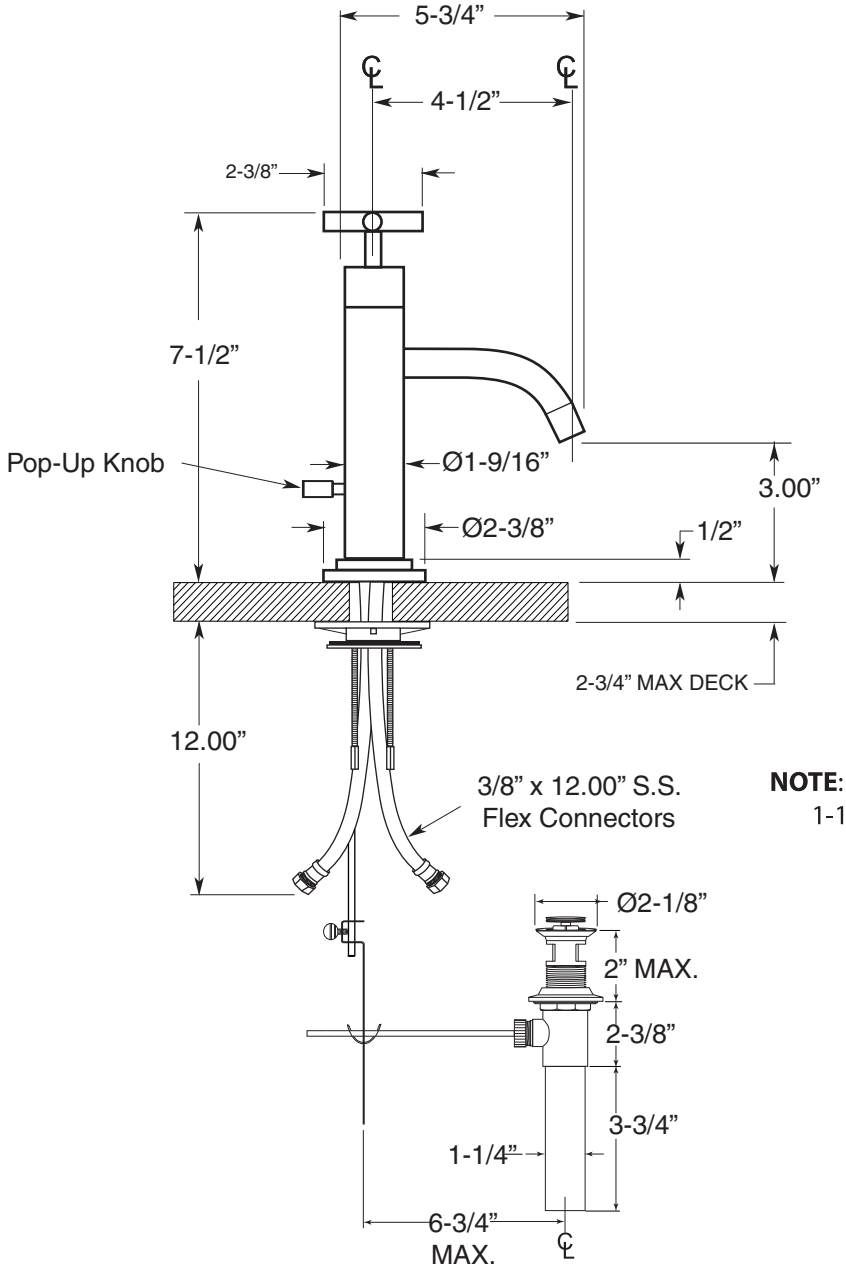

NOTE: Spouts install through 1-1/4” Diameter Holes.

Note: Measurements are subject to change or cancellation. No responsibility is assumed for use of superseded or voided pages.