Designer Collection Tubs
Model # 136

Madelyn 3

65.5" x 35.625" x 23.5"

GENERAL SPECIFICATIONS:
Material - Acrylic
Installation - Freestanding
Soaker Weight - 155 lbs / 71 kg
Maximum Fill - 80 gal to overflow
NOTE: Filling this tub to the maximum may require an above average size or dedicated water heater.

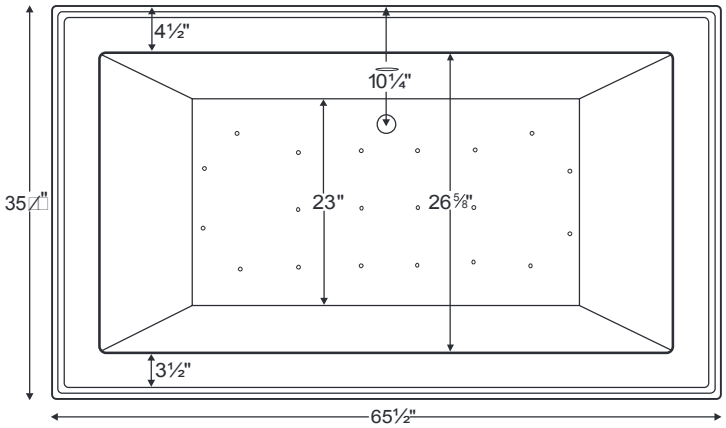

Requires use of a wall-mounted or freestanding tub filler. The drain and overflow assembly is concealed between the walls of the tub, eliminating the need for an exposed drain kit.

Shown with Air Massage Package.

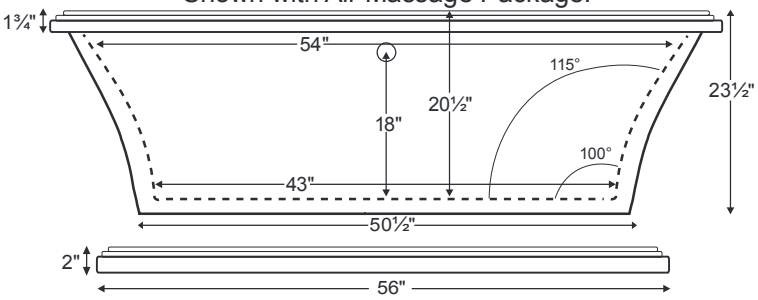

Optional one-piece pedestal base.

NOTE: OPTIONAL PEDESTAL BASE SHIPS ATTACHED TO TUB AND MUST BE ORDERED AT TIME OF TUB PURCHASE TO ENSURE PROPER FIT AND FINISH.

Overall pedestal dimensions:
56" (L) x 25 (W) x 2" (H)

ELECTRICAL COMPONENTS & SPECIFICATIONS Required Electrical Service - 110 Volt		
Hydrotherapy Package	Components Included	GFCI
Air Massage	heated blower	1-15 amp
Air Massage Elite	heated blower, chromatherapy	1-15 amp
For electrical requirements of tub options, see page C-2. CSA Certified C/US; ANSI Z124.1 for plastic tubs and ANSI 112.19.7 for whirlpool components.		

IMPORTANT ORDERING & INSTALLATION INFORMATION:

- Before ordering or installing, please consider future access to equipment.
- When ordering an air bath, the air blower must be remote mounted.
- If tub is equipped with Chromatherapy, the control box must be remote mounted.
- This tub has an extruded area on the drain side with a removable access panel for installation of waste and overflow kit (see image to the right). If the tub is ordered without the removable panel, the extruded area will still be visible and cannot be eliminated. Installation will be more difficult without the access panel.

- Specifications and configurations are subject to change without notice.
- Measurements are ±1/2" and are subject to change without notice.
- Measurements herein supersede all others published prior to publication date shown below.

See the "Designer Collection Tubs Installation & Operation Manual" included with tub delivery or go to mtibaths.com/support/installation_operation/manuals for all the information necessary to install and operate the tub.

MTI's Customer Service Department is available Monday-Friday 8am-6pm EST at 800-783-8827 or customerservice@mtibaths.com to answer any questions pertaining to ordering or installation.

©2015 by MTI Baths, Inc. Modi¿cation Rights Reserved.