KENSINGTON
3-Hole Bidet Mixer
MODEL # 24025

Pure Freude an Wasser

GROHE

GROHE America, Inc | 200 North Gary Avenue, Suite G, Roselle, IL 60172
Phone: +1 (800) 444-7643 | Fax: +1 (800) 225-2778 | us-customerservice@grohe.com

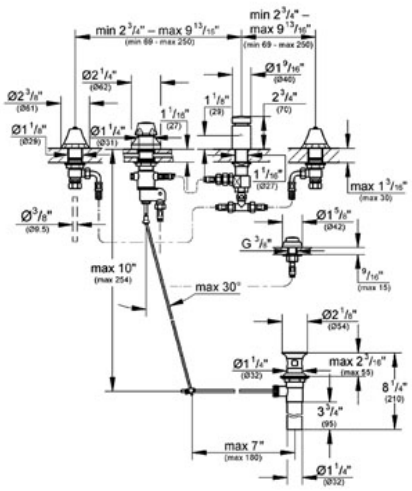

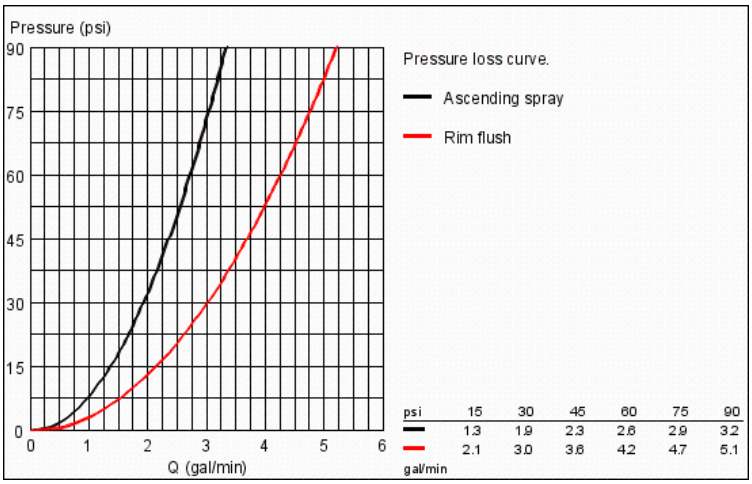

UPC C ®

Product Description:
3-Hole Bidet Mixer

Standard Specification:
- **GROHE StarLight®** finish
- Handles sold separately
- Rim flush/bidet spray
- Double check valve
- 3/4" ceramic cartridges (90° turn)
- 1 1/4" pop-up waste set
- Pressure resistant flexible connection hoses (between spout and side valves)
- Round Handles 18 086 000 & 18 086 EN0 (sold separately)
- Swarovski® Crystal Handles 18 086 VP0 (sold separately)
- Lever Handles 18 087 000 & 18 087 EN0 (sold separately)
- Max Flow Rate 13.2 gpm (50 L/min)

Applicable Codes & Standards:
- Energy Policy Act of 1992
- ASME A112.18.1/CSA B125.1

Color:
- ❑ 24025 000 chrome
- ❑ 24025 EN0 Brushed Nickel