Danze®

SPECIFICATIONS

OPULENCE™ SINGLE HANDLE POT FILLER

Model

D205057 (Replaces D205557 series)

Description

- Two ceramic disc valves
- 2-piece articulated spout folds out of way when not in use
- Spout reach extends up to 22"
- Designed for cold water hook up
- Single hole wall mount

Standards

NSF Certified to NSF/ANSI 61 Section 9

- NSF 61-9
- Energy Policy Act of 1992

UPC NSF/ANSI 372

- ASME A112.18.1M/A112.18.1
- NSF/ANSI 372
- CSA B125.1

- ADA Accessibility Guidelines for Buildings and Facilities - 4.27.4 Controls and Mechanisms

Warranty

Danze products are covered by a manufacturer's limited "lifetime" warranty for manufacturing defects.

Flow Rate

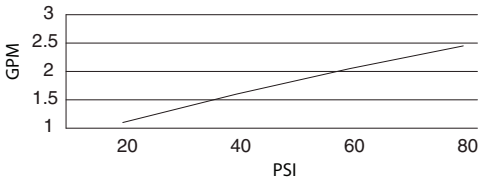

Finishes Available

- Chrome
- Other: Refer to Price List for additional finish

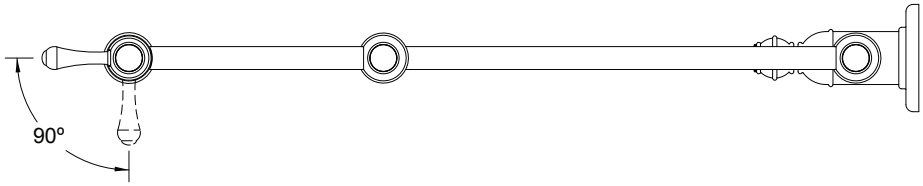

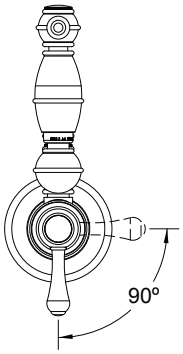

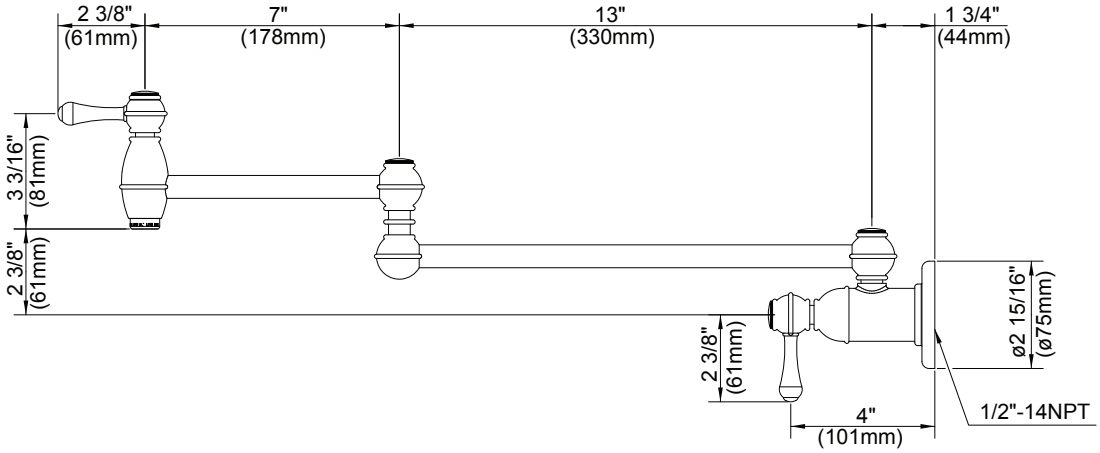

Submittal Information:

Job Name: _____ *Location:* _____

Contractor: _____ *Contact #:* _____