Date:

Client:

Project:

VOLA product: BK11

BK11

Two-handle mixer with 360° double swivel spout for bath filling and mixer with hand shower.
Complete with bracket and water collection box.
BK11 UP = Plumbed part, fixing bracket and water collection box.
BK11 AP = Trim parts.

Flow

	Bar:	1,0	2,0	3,0	4,0	5,0
090D	(l/min)	14,4	20,4	25,0	28,9	30,0
T1	(l/min)	5,8	8,2	10,0	11,6	12,9

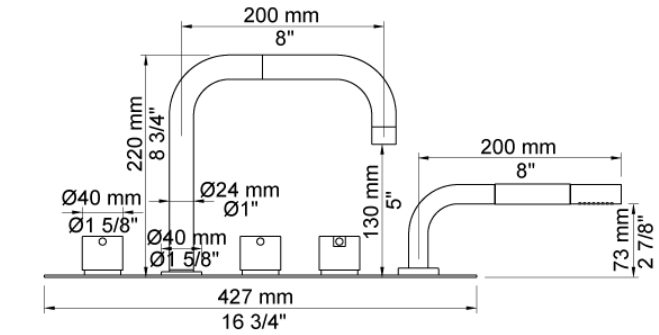

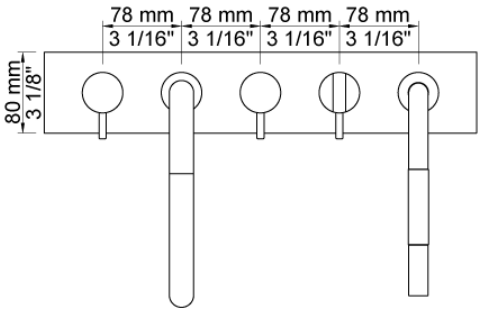

Available in colours

Color 02, Grey
Color 04, Light blue
Color 05, Orange
Color 06, Light green
Color 08, Yellow
Color 09, Dark grey
Color 12, Mocca
Color 14, Bright red
Color 15, Dark blue
Color 16, Polished chrome
Color 17, Gloss black
Color 18, White
Color 19, Natural brass
Color 20, Brushed chrome
Color 21, Carmine red
Color 25, Pink
Color 27, Matt black
Color 40, Brushed stainless steel