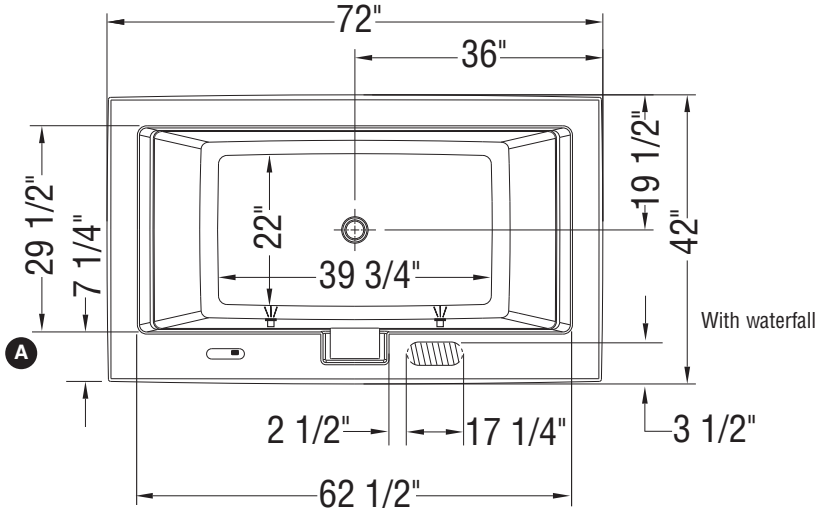

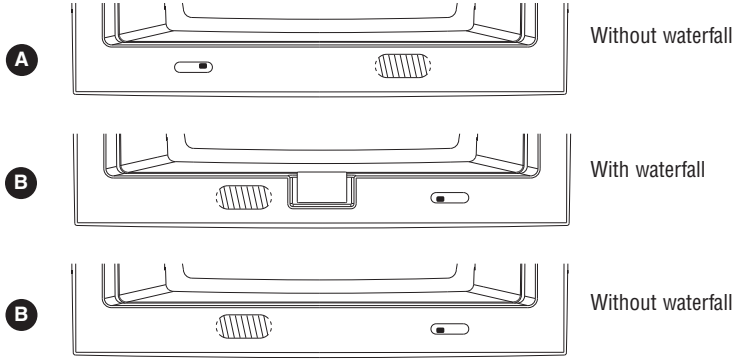

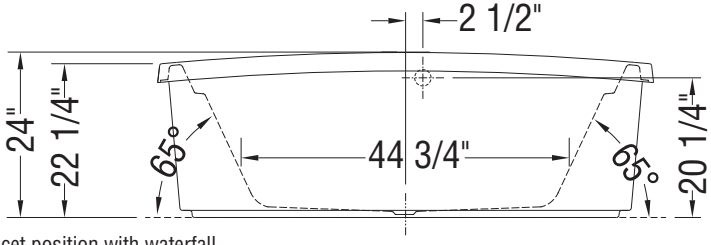

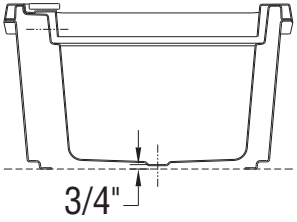

Ⓐ : Faucet position with waterfall
Ⓐ : Faucet position without waterfall
Ⓑ : Faucet position with waterfall
Ⓑ : Faucet position without waterfall
( ) : Indicates chromatherapy light positioning
( ) : Faucet installation area

All dimensions are approximate. Structure measurements must be verified against the unit to ensure proper fit.