GRECO™

Complete Widespread Lavatory Set

GR10C61

L1

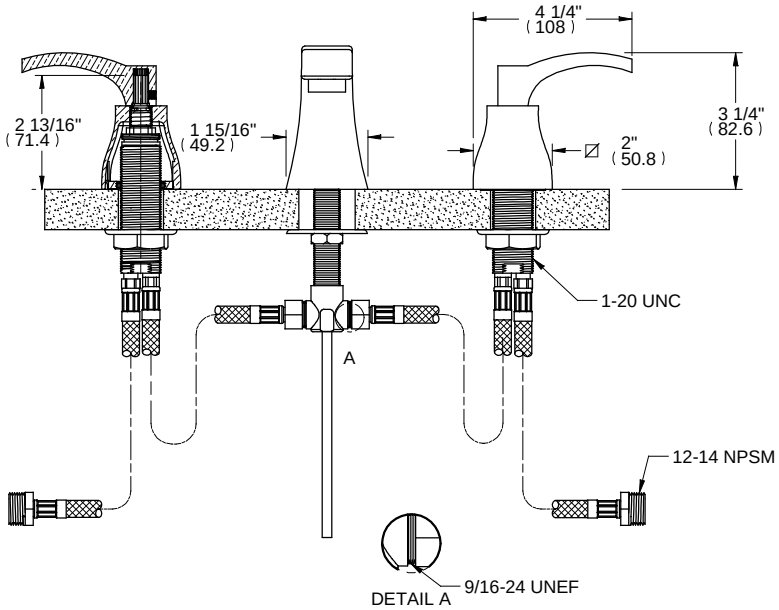

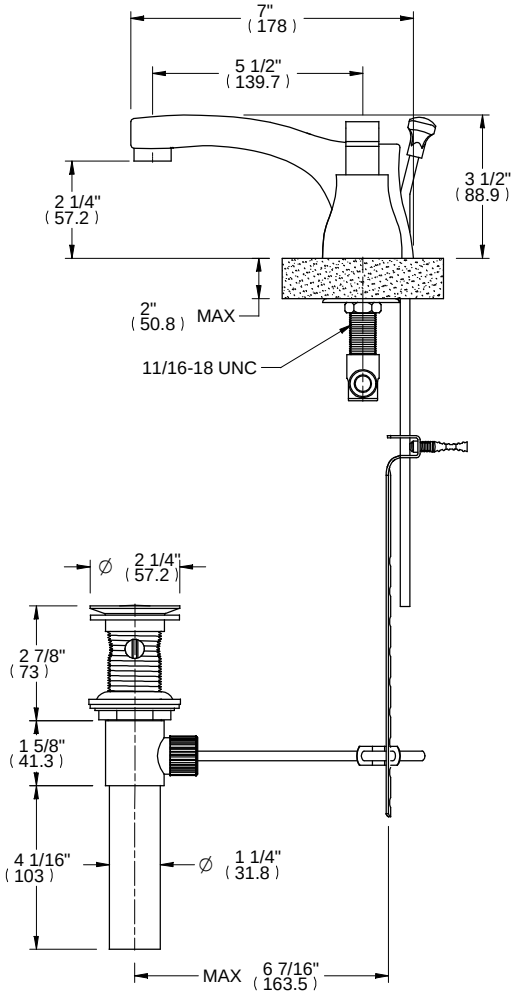

ALTMANS RESERVES THE RIGHT TO MODIFY AND CHANGE SPECIFICATIONS AT ANY TIME.PLEASE VERIFY DIMENSIONS PRIOR TO INSTALLATION.

Features

Available in All Finishes
Low Lead Brass Construction
1/4 Turn Ceramic Disc Cartridge

Through-Hole Specifications

Spout: Ø 1 1/4 " Max.
Valve: Ø 1 1/4" Max.

DIMENSIONS SHOWN TO NEAREST 1/16"