CADMUS
68” CAST IRON ROLL TOP TUB W/ 7” DECK HOLES

Cat. No.
CTR7H67

L: 68”
W: 30 1/2”
H: 23 1/4” (from floor to top of tub)
18 5/8” (from bottom of tub to top of tub)

The following is recommended for CTR7H60 tubs with deck holes:
- Rim-mounted faucet: part **#4601**
- Straight bath supplies: part **#5577**
- Leg tub drain: part **#5599**
- Complete shower unit: part **#4063**

Gallon Capacity:	57
Shipping Weight:	502 lbs.
Empty Weight:	309 lbs.
Filled Weight:	785 lbs.

Features:

- ►Inside finish is white enamel
- ►Ball and claw feet available in 6 finishes or unfinished
- ►Tub exterior is white (epoxy)
- ►7’ centers in tub deck
- ►Non-skid strips
- ►Feet attached and leveled before shipment
- ►Tub thoroughly inspected before shipment

Foot Finishes:
BP Polished Brass
CP Polished Chrome
PN Polished Nickel
SN Brushed Nickel
WH White
ORB Oil-rubbed Bronze

Meets or exceeds the following specifications: A112-19-1M 1994.

Extra Paint Charge (inside of tub is always white enamel):
Bisque Paint - $160 **Black Paint** - $160
Bathtubs painted in bisque or black are considered “special order” and are not returnable.

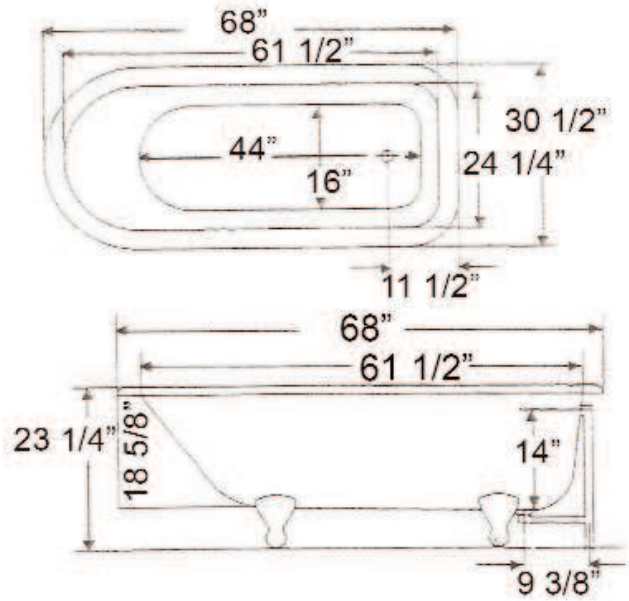

Dimensions of fixture are nominal and may vary within the range of tolerances established by ANSI Standard A112.19.2. Dimensions and specifications subject to change without notice.