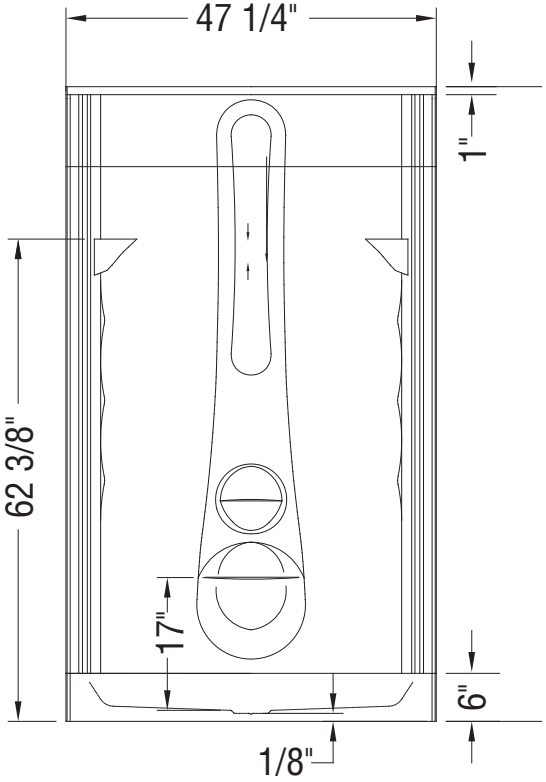

MAAX IES 1/2 positioning

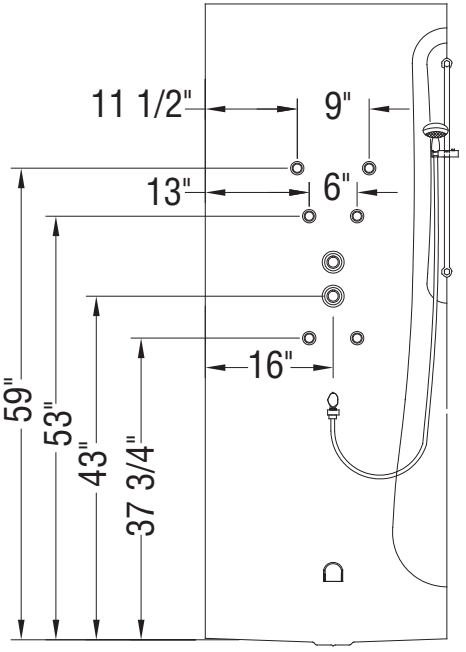

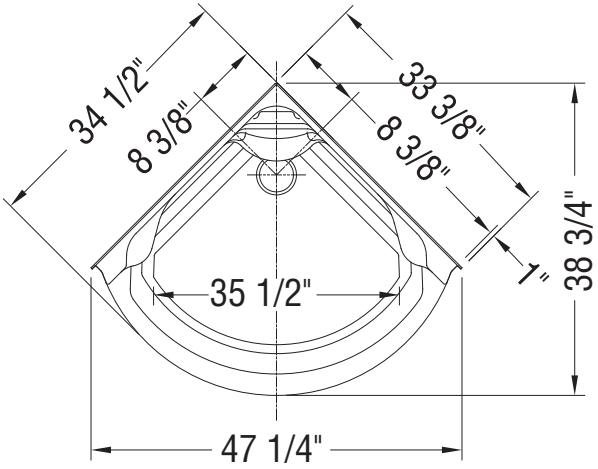

All dimensions are approximate. Structure measurements must be verified against the unit to ensure proper fit.