3-897

Product Dimensions *(units are in inches)*

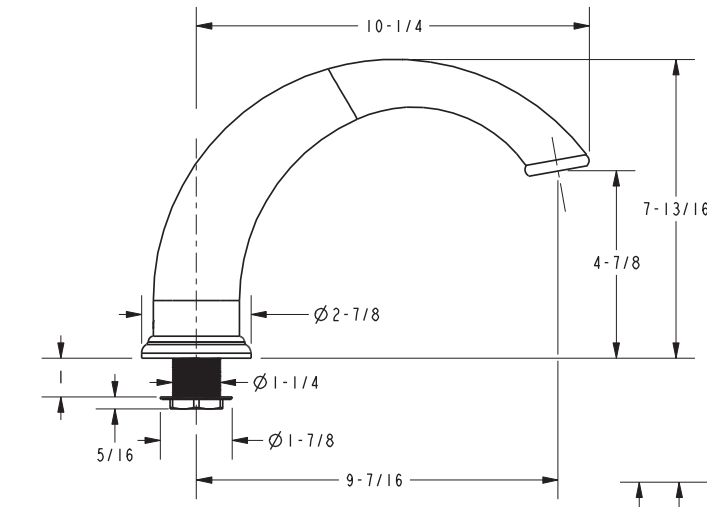

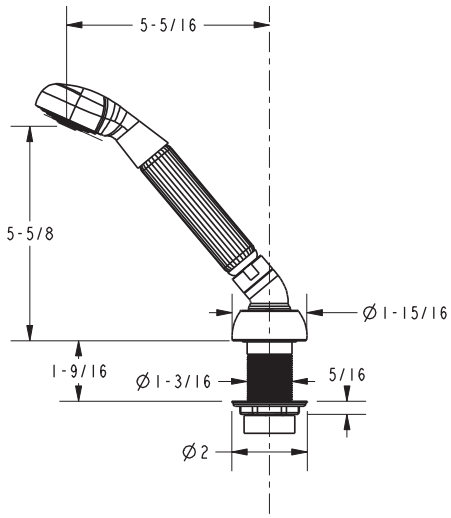

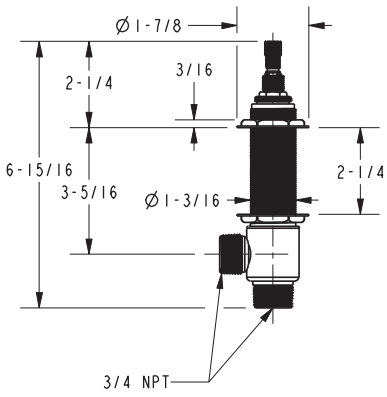

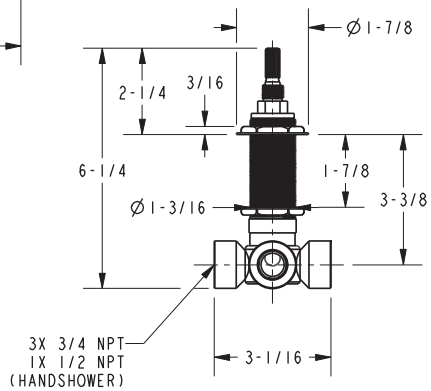

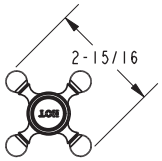

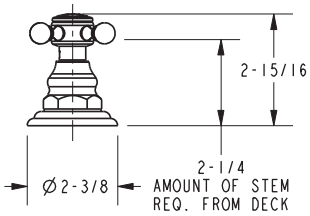

NEWPORT BRASS®
Flawless Beauty. From Faucet to Finish.™

t: 949.417.5207 | www.newportbrass.com

©2011 Brasstech, Inc.