KUKA

Robots

KR QUANTEC-2 K and KR QUANTEC-2 P

With K-F and P-C Variants

Assembly Instructions

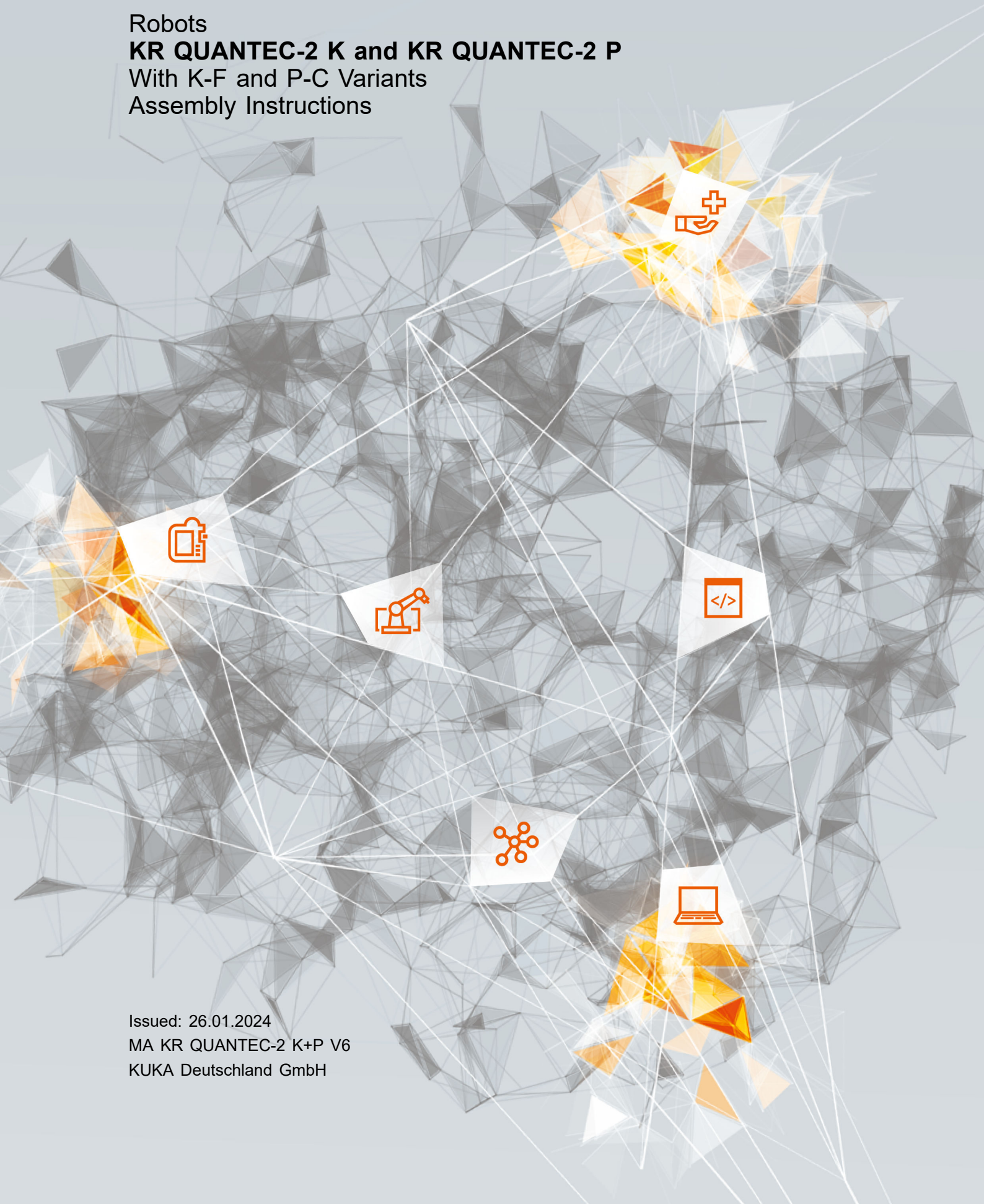

Issued: 26.01.2024

MA KR QUANTEC-2 K+P V6

KUKA Deutschland GmbH

© Copyright 2024
KUKA Deutschland GmbH
Zugspitzstraße 140
D-86165 Augsburg
Germany

This documentation or excerpts therefrom may not be reproduced or disclosed to third parties without the express permission of KUKA Deutschland GmbH.

Other functions not described in this documentation may be operable in the controller. The user has no claims to these functions, however, in the case of a replacement or service work.

We have checked the content of this documentation for conformity with the hardware and software described. Nevertheless, discrepancies cannot be precluded, for which reason we are not able to guarantee total conformity. The information in this documentation is checked on a regular basis, however, and necessary corrections will be incorporated in the subsequent edition.

Subject to technical alterations without an effect on the function.

KIM-PS5-DOC

Translation of the original documentation

Publication:	Pub MA KR QUANTEC-2 K+P (PDF) en PB15812
Book structure:	MA KR QUANTEC-2 K+P V4.1 BS13512
Version:	MA KR QUANTEC-2 K+P V6

Contents

1	**Introduction**	**9**
1.1	Target group	9
1.2	Industrial robot documentation	9
1.3	Representation of warnings and notes	9
1.4	Terms used	10
2	**Product description**	**15**
2.1	Overview of the robot system	15
2.2	Description of the manipulator	16
2.3	Intended use and misuse	18
3	**Safety**	**19**
3.1	General	19
3.1.1	Disclaimer	19
3.1.2	EC declaration of conformity and declaration of incorporation	20
3.1.3	Terms in the “Safety” chapter	20
3.2	Personnel	22
3.3	Workspace, safety zone and danger zone	23
3.4	Overview of protective equipment	23
3.4.1	Mechanical end stops	23
3.4.2	Mechanical axis limitation (optional)	24
3.4.3	Options for moving the manipulator without drive energy	24
3.4.4	Labeling on the industrial robot	25
3.5	Safety measures	25
3.5.1	General safety measures	25
3.5.2	Transportation	27
3.5.3	Start-up and recommissioning	27
3.5.4	Manual mode	29
3.5.5	Automatic mode	30
3.5.6	Maintenance and repair	30
3.5.7	Decommissioning, storage and disposal	32
4	**Technical data**	**33**
4.1	Technical data, overview	33
4.2	Technical data, KR 120 R3500-2 P	34
4.2.1	Basic data, KR 120 R3500-2 P	34
4.2.2	Axis data, KR 120 R3500-2 P	36
4.2.3	Payloads, KR 120 R3500-2 P	39
4.2.4	Foundation loads, KR 120 R3500-2 P	44
4.3	Technical data, KR 120 R3500-2 P-C	46
4.3.1	Basic data, KR 120 R3500-2 P-C	46
4.3.2	Axis data, KR 120 R3500-2 P-C	47
4.3.3	Payloads, KR 120 R3500-2 P-C	50
4.3.4	Foundation loads, KR 120 R3500-2 P-C	55
4.4	Technical data, KR 120 R3900-2 K	57
4.4.1	Basic data, KR 120 R3900-2 K	57
4.4.2	Axis data, KR 120 R3900-2 K	58

4.4.3 Payloads, KR 120 R3900-2 K..... 61
4.4.4 Foundation loads, KR 120 R3900-2 K..... 66
4.5 Technical data, KR 180 R3500-2 K..... 68
4.5.1 Basic data, KR 180 R3500-2 K..... 68
4.5.2 Axis data, KR 180 R3500-2 K..... 69
4.5.3 Payloads, KR 180 R3500-2 K..... 72
4.5.4 Foundation loads, KR 180 R3500-2 K..... 77
4.6 Technical data, KR 180 R3500-2 K-F..... 79
4.6.1 Basic data, KR 180 R3500-2 K-F..... 79
4.6.2 Axis data, KR 180 R3500-2 K-F..... 81
4.6.3 Payloads, KR 180 R3500-2 K-F..... 84
4.6.4 Foundation loads, KR 180 R3500-2 K-F..... 89
4.7 Technical data, KR 210 R3300-2 K..... 91
4.7.1 Basic data, KR 210 R3300-2 K..... 91
4.7.2 Axis data, KR 210 R3300-2 K..... 92
4.7.3 Payloads, KR 210 R3300-2 K..... 95
4.7.4 Foundation loads, KR 210 R3300-2 K..... 101
4.8 Technical data, KR 210 R3300-2 K-F..... 103
4.8.1 Basic data, KR 210 R3300-2 K-F..... 103
4.8.2 Axis data, KR 210 R3300-2 K-F..... 105
4.8.3 Payloads, KR 210 R3300-2 K-F..... 108
4.8.4 Foundation loads, KR 210 R3300-2 K-F..... 114
4.9 Technical data, KR 270 R3100-2 K..... 116
4.9.1 Basic data, KR 270 R3100-2 K..... 116
4.9.2 Axis data, KR 270 R3100-2 K..... 117
4.9.3 Payloads, KR 270 R3100-2 K..... 120
4.9.4 Foundation loads, KR 270 R3100-2 K..... 126
4.10 Technical data, KR 270 R3100-2 K-F..... 128
4.10.1 Basic data, KR 270 R3100-2 K-F..... 128
4.10.2 Axis data, KR 270 R3100-2 K-F..... 130
4.10.3 Payloads, KR 270 R3100-2 K-F..... 133
4.10.4 Foundation loads, KR 270 R3100-2 K-F..... 139
4.11 Plates and labels..... 141
4.12 REACH duty to communicate information acc. to Art. 33..... 144
4.13 Stopping distances and times..... 145
4.13.1 General information..... 145
4.13.2 Stopping distances and times, KR 120 R3500-2 P and KR 120 R3500-2 P-C. 146
4.13.2.1 Stopping distances and stopping times, STOP 0, A1 to A3..... 146
4.13.2.2 Stopping distances and stopping times, STOP 1, A1..... 147
4.13.2.3 Stopping distances and stopping times, STOP 1, A2..... 149
4.13.2.4 Stopping distances and stopping times, STOP 1, A3..... 151
4.13.3 Stopping distances and times, KR 120 R3900-2 K..... 153
4.13.3.1 Stopping distances and stopping times, STOP 0, A1 to A3..... 153
4.13.3.2 Stopping distances and stopping times, STOP 1, A1..... 154
4.13.3.3 Stopping distances and stopping times, STOP 1, A2..... 156
4.13.3.4 Stopping distances and stopping times, STOP 1, A3..... 158
4.13.4 Stopping distances and times, KR 180 R3500-2 K and KR 180 R3500-2 K-F.. 158
4.13.4.1 Stopping distances and stopping times, STOP 0, A1 to A3..... 158
4.13.4.2 Stopping distances and stopping times, STOP 1, A1..... 160

4.13.4.3 Stopping distances and stopping times, STOP 1, A2 ... 162
4.13.4.4 Stopping distances and stopping times, STOP 1, A3 ... 164
4.13.5 Stopping distances and times, KR 210 R3300-2 K and KR 210 R3300-2 K-F.. 164
4.13.5.1 Stopping distances and stopping times, STOP 0, A1 to A3 ... 164
4.13.5.2 Stopping distances and stopping times, STOP 1, A1 ... 166
4.13.5.3 Stopping distances and stopping times, STOP 1, A2 ... 168
4.13.5.4 Stopping distances and stopping times, STOP 1, A3 ... 170
4.13.6 Stopping distances and times, KR 270 R3100-2 K and KR 270 R3100-2 K-F.. 170
4.13.6.1 Stopping distances and stopping times, STOP 0, A1 to A3 ... 170
4.13.6.2 Stopping distances and stopping times, STOP 1, A1 ... 172
4.13.6.3 Stopping distances and stopping times, STOP 1, A2 ... 174
4.13.6.4 Stopping distances and stopping times, STOP 1, A3 ... 176

5 Planning ... 177

5.1 Information for planning ... 177
5.2 Mounting base with centering ... 177
5.3 Mounting base 150 mm (optional) ... 180
5.4 Machine frame mounting ... 183
5.5 Connecting cables and interfaces ... 185

6 Transportation ... 189

6.1 Transporting the robot ... 189

7 Start-up and recommissioning ... 195

7.1 Starting up floor-mounted robots (mounting base) ... 195
7.1.1 Installing the robot with mounting base ... 197
7.1.2 Connecting the connecting cables ... 199
7.1.3 Concluding work ... 199
7.2 Starting up floor-mounted robots (optional 150 mm mounting base) ... 200
7.2.1 Installing the robot with mounting base 150 mm (optional) ... 202
7.2.2 Connecting the connecting cables ... 204
7.2.3 Concluding work ... 204
7.3 Starting up robots (machine frame mounting) ... 205
7.3.1 Installing the robot with the machine frame mounting assembly ... 207
7.3.2 Connecting the connecting cables ... 208
7.3.3 Concluding work ... 209
7.4 Description of the connecting cables, KR C4 ... 209
7.4.1 Description of the Motor cable ... 210
7.4.2 Description of the Data cable ... 212
7.4.3 Description of the ground conductor ... 213
7.5 Description of the connecting cables, KR C5 ... 213
7.5.1 Description of the Motor cable ... 214
7.5.2 Description of the Data cable ... 216
7.5.3 Description of the ground conductor ... 217

8 Maintenance ... 219

8.1 Maintenance overview ... 219
8.1.1 Maintenance table ... 220
8.2 Oil change in A1 ... 223
8.2.1 Draining the gear oil from A1 ... 225

8.2.2 Filling gear unit A1 with gear oil ... 226
8.2.3 Concluding work ... 226
8.3 Oil change in A1, ceiling-mounted robot ... 227
8.3.1 Draining the gear oil from A1 ... 228
8.3.2 Filling gear unit A1 with gear oil ... 229
8.3.3 Concluding work ... 230
8.4 Oil change in A2 ... 230
8.4.1 Draining the gear oil from A2 ... 232
8.4.2 Filling gear unit A2 with gear oil ... 233
8.4.3 Concluding work ... 234
8.5 Oil change in A3 ... 234
8.5.1 Draining the gear oil from A3 ... 236
8.5.2 Filling gear unit A3 with gear oil ... 237
8.5.3 Concluding work ... 238
8.6 Oil change in A4 ... 238
8.6.1 Draining the gear oil from A4 ... 240
8.6.2 Filling gear unit A4 with gear oil ... 241
8.6.3 Concluding work ... 242
8.7 Oil change in A5/A6 ... 242
8.7.1 Draining the gear oil on A5/A6 ... 244
8.7.2 Filling gear unit A5/A6 with gear oil ... 246
8.7.3 Concluding work ... 247
8.8 Checking the counterbalancing system ... 247
8.8.1 Checking the counterbalancing system ... 248
8.8.2 Concluding work ... 248
8.9 Exchanging the counterbalancing system ... 249
8.9.1 Securing the link arm ... 251
8.9.2 Removing the counterbalancing system ... 251
8.9.3 Installing the counterbalancing system ... 254
8.9.4 Removing the equipment securing the link arm ... 257
8.9.5 Checking the counterbalancing system ... 258
8.9.6 Concluding work ... 258
8.10 Exchanging the counterbalancing system on a ceiling-mounted robot ... 258
8.10.1 Securing the link arm ... 260
8.10.2 Removing the counterbalancing system on a ceiling-mounted robot ... 261
8.10.3 Installing the counterbalancing system on a ceiling-mounted robot ... 263
8.10.4 Removing the equipment securing the link arm ... 265
8.10.5 Checking the counterbalancing system ... 266
8.10.6 Concluding work ... 267
8.11 Cleaning the robot ... 267
8.11.1 Cleaning ... 268
8.11.2 Concluding work ... 268

9 Repair ... 269

9.1 Exchanging motor A1 ... 269
9.1.1 Removing the motor on axis 1 ... 272
9.1.2 Preparing a new motor for installation ... 273
9.1.3 Installing the motor on axis 1 ... 273
9.1.4 Concluding work ... 274

9.2 Exchanging motor A2 ... 275
9.2.1 Securing the link arm ... 277
9.2.2 Removing motor A2 ... 278
9.2.3 Preparing a new motor for installation ... 279
9.2.4 Installing motor A2 ... 280
9.2.5 Removing the equipment securing the link arm ... 281
9.2.6 Concluding work ... 282
9.3 Exchanging motor A3 ... 282
9.3.1 Securing the robot arm ... 285
9.3.2 Removing motor A3 ... 286
9.3.3 Preparing a new motor for installation ... 288
9.3.4 Installing motor A3 ... 289
9.3.5 Removing the equipment securing the robot arm ... 291
9.3.6 Concluding work ... 292
9.4 Exchanging motor A4 ... 292
9.4.1 Removing motor A4 ... 295
9.4.2 Preparing the new motor A4 - A5 for installation ... 297
9.4.3 Installing motor A4 ... 298
9.4.4 Concluding work ... 300
9.5 Exchanging motor A5 ... 300
9.5.1 Removing motor A5 ... 303
9.5.2 Preparing the new motor A4 - A5 for installation ... 305
9.5.3 Installing motor A5 ... 306
9.5.4 Concluding work ... 308
9.6 Exchanging motor A6 ... 308
9.6.1 Removing motor A4 ... 311
9.6.2 Removing motor A5 ... 313
9.6.3 Removing the in-line wrist ... 315
9.6.4 Removing motor A6 ... 317
9.6.5 Preparing a new motor for installation ... 317
9.6.6 Installing motor A6 ... 318
9.6.7 Installing the in-line wrist ... 319
9.6.8 Installing motor A5 ... 321
9.6.9 Installing motor A4 ... 323
9.6.10 Concluding work ... 324
9.7 Exchanging the in-line wrist ... 325
9.7.1 Removing motor A4 ... 328
9.7.2 Removing motor A5 ... 329
9.7.3 Removing the in-line wrist ... 331
9.7.4 Removing motor A6 ... 333
9.7.5 Preparing the new in-line wrist ... 333
9.7.6 Installing motor A6 ... 334
9.7.7 Installing the in-line wrist ... 335
9.7.8 Installing motor A5 ... 336
9.7.9 Installing motor A4 ... 338
9.7.10 Concluding work ... 340
9.8 Exchanging the connecting shafts ... 340
9.8.1 Removing motor A4 ... 343
9.8.2 Removing motor A5 ... 345

9.8.3 Installing motor A5 ... 347
9.8.4 Installing motor A4 ... 349
9.8.5 Concluding work ... 351
9.9 Description of the electrical installations ... 351

10 Decommissioning, storage and disposal ... 363

10.1 Decommissioning ... 363
10.1.1 Moving the robot into its transport position ... 363
10.1.2 Removing the robot ... 364
10.1.3 Concluding work ... 365
10.2 Storage ... 365
10.2.1 Moving the robot into its transport position ... 366
10.2.2 Removing the robot ... 367
10.2.3 Cleaning ... 368
10.2.4 Preparing for storage ... 368
10.2.5 Concluding work ... 369
10.3 Disposal ... 369

11 Options ... 371

11.1 Release device ... 371
11.1.1 Starting up the release device ... 372
11.1.1.1 Installing the release device ... 373
11.1.1.2 Moving the manipulator without drive energy ... 374
11.1.1.3 Concluding work ... 375
11.2 Purge option A ... 375
11.3 Purge option B ... 376
11.4 Purge option C ... 377
11.4.1 Starting up PURGE option C ... 379
11.4.1.1 Installing PURGE option C ... 379
11.4.1.2 Concluding work ... 380
11.5 Purge option D ... 380
11.5.1 Starting up PURGE option D ... 382
11.5.1.1 Installing PURGE option D ... 382
11.5.1.2 Concluding work ... 383

12 Appendix ... 385

12.1 Tightening torques ... 385
12.2 Auxiliary substances and consumables used ... 386
12.3 Product safety data sheet ... 387
12.4 Applied standards and regulations ... 393

13 KUKA Service ... 395

13.1 Requesting support ... 395
13.2 KUKA Customer Support ... 395

Index 397

1 Introduction

1.1 Target group

This documentation is aimed at users with the following knowledge and skills:

- Advanced knowledge of mechanical engineering
- Advanced knowledge of electrical engineering
- Knowledge of the robot controller system

For optimal use of KUKA products, we recommend the training courses offered by KUKA College. Information about the training program can be found at www.kuka.com or can be obtained directly from our subsidiaries.

1.2 Industrial robot documentation

The industrial robot documentation consists of the following parts:

- Documentation for the robot arm
- Documentation for the robot controller
- Documentation for the smartPAD-2 or smartPAD pro (if used)
- Documentation for the System Software
- Instructions for options and accessories
- Spare parts overview in KUKA Xpert

Each set of instructions is a separate document.

1.3 Representation of warnings and notes

Safety

These warnings are provided for safety purposes and **must** be observed.

DANGER

These warnings mean that it is certain or highly probable that death or severe injuries **will** occur if no precautions are taken.

WARNING

These warnings mean that death or severe injuries **may** occur if no precautions are taken.

CAUTION

These warnings mean that minor injuries **may** occur if no precautions are taken.

NOTICE

These warnings mean that damage to property **may** occur, if no precautions are taken.

These warnings contain references to safety-relevant information or general safety measures.
These warnings do not refer to individual hazards or individual precautionary measures.

This warning draws attention to procedures which serve to prevent or remedy emergencies or malfunctions:

SAFETY INSTRUCTION
The following procedure must be followed exactly!

Procedures marked with this warning **must** be followed exactly.

Notices

These notices serve to make your work easier or contain references to further information.

	Tip to make your work easier or reference to further information

1.4 Terms used

	The overview may contain terms symbols that are not relevant for this document.

Term	Description
Axis range	Range within which the axis may move The axis range must be defined for each axis.
Stopping distance	Stopping distance = reaction distance + braking distance The stopping distance is part of the danger zone.
Workspace	Area within which the robot may move. The workspace is derived from the individual axis ranges.
Arctic	Arctic for use in temperature ranges under 0° C (273 K).
Extension	Distance (l in %) between axis 1 and the intersection of axes 4 and 5. With parallelogram robots, the distance between axis 1 and the intersection of axis 6 and the mounting flange. 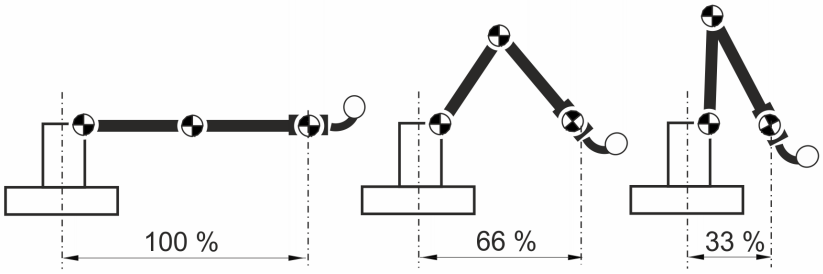
C	Ceiling
CR	Clean Room Designation for KUKA products developed for use in cleanrooms.
EDS	Electronic Data Storage (memory card)
EDS cool	Electronic Data Storage cool Memory card with extended temperature range

EMD	Electronic Mastering Device
SPP	Spare parts package
EX	Explosion-proof zone
F	Foundry
F exclusive	Foundry exclusive
Danger zone	The danger zone consists of the workspace and the stopping distances of the manipulator and external axes (optional).
HA	High Accuracy
HI	High Inertia
HM	Hygienic Machine For the primary and secondary foodstuffs industries
HO	Hygienic Oil For the secondary foodstuffs industry
HP	High Protection
HW	Hollow Wrist
K	Shelf-mounted
KCP	KUKA Control Panel Teach pendant for the KR C2/KR C2 edition2005 The KCP has all the operator control and display functions required for operating and programming the industrial robot.
KR	KUKA robot
KR C	KUKA Robot Control Robot controller
KS	Shelf-mounted, small
KUKA smartPAD	see “smartPAD”
KUKA smartPAD-2	see “smartPAD”
Manipulator	The robot arm and the associated electrical installations
MEMD	Micro Electronic Mastering Device
micro RDC	micro Resolver Digital Converter
MT	Machine Tooling
P	Press-to-press robot
PA	Palletizer
Phi	Angle of rotation (°) about the corresponding axis. This value can be entered in the controller via the teach pendant, from which it can be read.

POV	Program override (%) = velocity of the robot motion. This value can be entered in the controller via the teach pendant, from which it can be read.
RDC	Resolver Digital Converter The resolver digital converter is used to acquire motor data (e.g. position data, motor temperatures).
RDC cool	Resolver Digital Converter Resolver Digital Converter with extended temperature range
SC	Special Connection
SE	Second Encoder
SI	Safe Interaction
SL	Washdown
smartPAD	Teach pendant for the robot controller The smartPAD has all the operator control and display functions required for operation and programming. The following models exist: • KUKA smartPAD • KUKA smartPAD-2 • KUKA smartPAD pro For robot controllers of the KR C5 series with KUKA System Software or VW System Software, only the model **KUKA smartPAD-2** is used. For robot controllers of the KR C5 series with KUKA iiQKA.OS, only the model **KUKA smartPAD pro** is used. For other robot controllers, the designation “KUKA smartPAD” or “smartPAD” always refers to all models possible for the respective controller unless an explicit distinction is made.
Stop categories	**Note:** Information about the stop categories for KUKA robot controllers can be found in the “Safety” chapter of the robot controller assembly instructions.
T1	Test mode, Manual Reduced Velocity (<= 250 mm/s) **For KUKA iiQKA.OS:** With manual guidance in T1, the velocity is not reduced, but rather limited through a safety-oriented velocity monitoring in accordance with the safety configuration.
T2	**For KUKA iiQKA.OS:** not relevant at present **For KUKA System Software / VW System Software:** Test mode, Manual High Velocity (> 250 mm/s permissible)
W	Wall
WP	Waterproof

External axis	**For KUKA iiQKA.OS:** not relevant at present **For KUKA System Software / VW System Software:** Axis of motion that does not belong to the manipulator, yet is controlled with the robot controller. For example, KUKA linear unit, turn-tilt table and positioner

2 Product description

2.1 Overview of the robot system

A robot system (>>> *Fig. 2-1*) comprises all the assemblies of an industrial robot, including the manipulator (mechanical system and electrical installations), robot controller, connecting cables, tool and other equipment. The product family KR QUANTEC-2 comprises the robot types:

- KR 120 R3500-2 P
- KR 120 R3500-2 P-C
- KR 120 R3900-2 K
- KR 180 R3500-2 K
- KR 180 R3500-2 K-F
- KR 210 R3300-2 K
- KR 210 R3300-2 K-F
- KR 270 R3100-2 K
- KR 270 R3100-2 K-F

An industrial robot of this product family comprises the following components:

- Manipulator
- Robot controller
- Connecting cables
- Teach pendant (KUKA smartPAD)
- Software
- Options, accessories

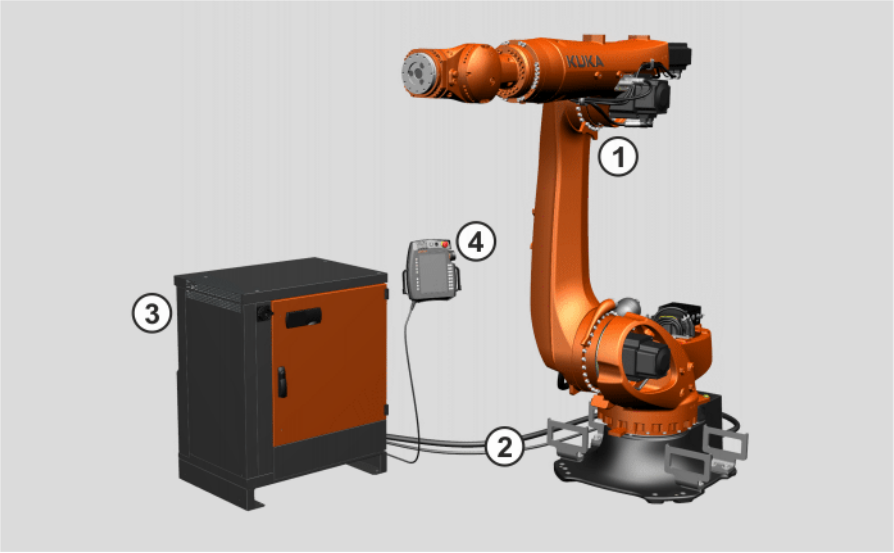

Fig. 2-1: Example of an industrial robot

1	Manipulator	3	Robot controller
2	Connecting cables	4	smartPAD

2.2 Description of the manipulator

Overview

The manipulators (= robot arm and electrical installations) of the variants are designed as 6-axis jointed-arm kinematic systems. They consist of the following main assemblies:

- In-line wrist
- Arm
- Link arm
- Counterbalancing system
- Rotating column
- Base frame
- Electrical installations

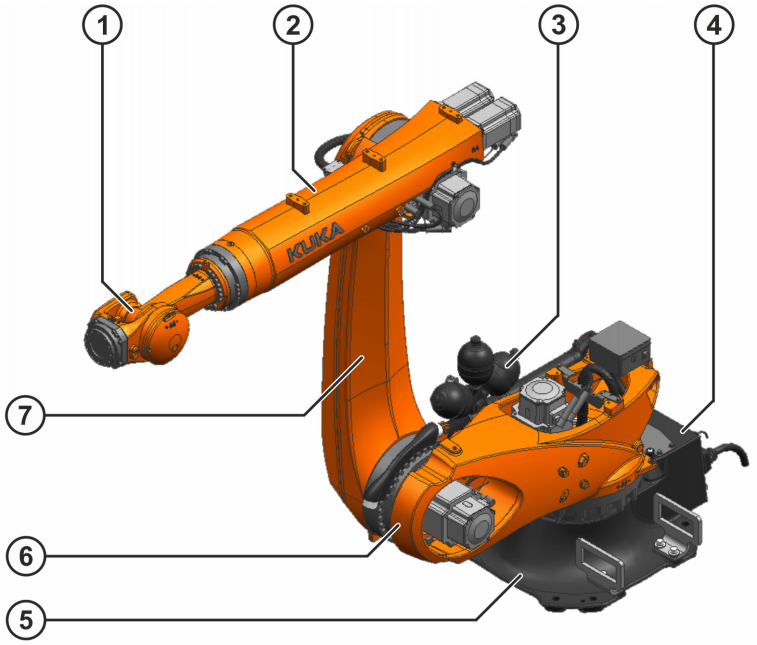

Fig. 2-2: Main assemblies of the manipulator

1	In-line wrist	5	Base frame
2	Arm	6	Rotating column
3	Counterbalancing system	7	Link arm
4	Electrical installations		

DANGER

Axes 1 to 3 are equipped with end stops. These serve exclusively as machine protection.
The following options are available for personnel protection:

- The Safe Robot functionality of the controller
- The use of mechanical axis limitations for axes 1 to 3 (optional)

In-line wrist

The robot is fitted with a 3-axis in-line wrist. The in-line wrist contains axes 4, 5 and 6. The motor of axis 6 is located directly on the wrist, inside the arm. It drives the wrist directly, while for axes 4 and 5 the drive comes from the rear of the arm via connecting shafts. For attaching end effectors (tools), the in-line wrist has a mounting flange.

Arm

The arm is the link between the in-line wrist and the link arm. It houses the motors of wrist axes 4 and 5. The arm is driven by the motor of axis 3. The maximum permissible swivel angle is mechanically limited by an overrun safeguard for each direction, plus and minus. There is an interface on the arm for fastening supplementary loads.

Link arm

The link arm is the assembly located between the arm and the rotating column. The maximum permissible swivel angle is mechanically limited by an overrun safeguard for each direction, plus and minus. There is an interface on the link arm for fastening supplementary loads.

Rotating column

The rotating column houses the motors of axes 1 and 2. The rotational motion of axis 1 is performed by the rotating column. The rotating column also supports the link arm. The bearings of the counterbalancing system are situated at the rear. There is also an interface for fastening supplementary loads on the rotating column.

Base frame

The base frame is the base of the robot. It is screwed to the mounting base. The electrical installations are fastened in the base frame. Also located on the base frame is the interface for the motor and data cable and the energy supply system.

Counterbalancing system

The counterbalancing system is installed between the rotating column and the link arm and serves to minimize the moments generated about axis 2 when the robot is in motion and at rest. A closed hydropneumatic system is used. The system consists of three accumulators, a hydraulic cylinder with associated hoses, a pressure gauge and a bursting disc as a safety element to protect against overfilling. The counterbalancing system is classified below category I, fluid group 2, of the Pressure Equipment Directive.

Electrical installations

The electrical installations include all the motor and data cables for the motors of axes 1 to 6. All connections are implemented as plug-in connectors in order to enable the motors to be exchanged quickly and reliably. The electrical installations also include the RDC box, which is mounted on the rotating column. The interface on the base frame of the robot for connecting the connecting cables has plug-and-socket connections. The connecting cables from the robot controller can be plugged in by means of connectors. The electrical installations also include an integrated protective circuit.

Options

The robot can, for example, be equipped with the following options. The option is described in separate documentation.

- Axis limitations for axes A1, A2 and A3
- Energy supply systems A1 to A3
- Energy supply systems A3 to A6
- Booster Frame S780

- Mounting flange (adapter)
- Mounting flange (adapter) in corrosion-protected design
- Adapter ring KR QUANTEC/KR QUANTEC-2
- Brake release device

The following options are also available:

- Release device (>>> *11.1 "Release device" Page 371*)
- Purge option A (>>> *11.2 "Purge option A" Page 375*)
- Purge option B (>>> *11.3 "Purge option B" Page 376*)
- Purge option C (>>> *11.4 "Purge option C" Page 377*)
- Purge option D (>>> *11.5 "Purge option D" Page 380*)

2.3 Intended use and misuse

Intended use

The industrial robot is intended for handling tools and fixtures or for processing and transferring components or products. Use is only permitted under the specified environmental conditions.

Operation of the industrial robot in accordance with its intended use also requires compliance with the operating and assembly instructions for the individual components, with particular reference to the maintenance specifications.

Misuse

Any use or application deviating from the intended use is deemed to be misuse and is not allowed. Misuse will result in the loss of warranty and liability claims. KUKA is not liable for any damage resulting from such misuse. This includes e.g.:

- Use as a climbing aid
- Operation outside the specified operating parameters
- Operation without the required safety equipment
- Transportation of persons and animals
- Outdoor operation
- Use in a potentially explosive area
- Use in radioactive environments
- Operation in underground mining

NOTICE

Deviations from the operating conditions specified in the technical data or the use of special functions or applications can lead to premature wear, for example. KUKA Service must be consulted in this event.



The robot system is an integral part of a complete system and may only be operated in a CE-compliant system.

3 Safety

3.1 General



- This “Safety” chapter refers to a mechanical component of an industrial robot.
- If the mechanical component is used together with a KUKA robot controller, the “Safety” chapter of the operating instructions or assembly instructions of the robot controller must be used!

  This contains all the information provided in this “Safety” chapter. It also contains additional safety information relating to the robot controller which must be observed.
- Where this “Safety” chapter uses the term “industrial robot”, this also refers to the individual mechanical component if applicable.

3.1.1 Disclaimer

The device described in this document is either an industrial robot or a component thereof.

Components of the industrial robot:

- Manipulator
- Robot controller
- Teach pendant
- Connecting cables
- External axes (optional)

  e.g. linear unit, turn-tilt table, positioner
- Software
- Options, accessories

The industrial robot is built using state-of-the-art technology and in accordance with the recognized safety rules. Nevertheless, misuse of the industrial robot may constitute a risk to life and limb or cause damage to the industrial robot and to other material property.

The industrial robot may only be used in perfect technical condition in accordance with its intended use and only by safety-conscious persons who are fully aware of the risks involved in its operation. Use of the industrial robot is subject to compliance with this document and with the declaration of incorporation supplied together with the industrial robot. Any functional disorders, especially those affecting safety, must be rectified immediately.

Safety information

Information about safety may not be construed against the manufacturer. Even if all safety instructions are followed, this is not a guarantee that the industrial robot will not cause personal injuries or material damage.

No modifications may be carried out to the industrial robot without the authorization of the manufacturer. Unauthorized modifications will result in the loss of warranty and liability claims.

Additional components (tools, software, etc.), not supplied by the manufacturer, may be integrated into the industrial robot. The user is liable for any damage these components may cause to the industrial robot or to other material property.

In addition to the Safety chapter, this document contains further safety instructions. These must also be observed.

3.1.2 EC declaration of conformity and declaration of incorporation

The industrial robot constitutes partly completed machinery as defined by the EC Machinery Directive. The industrial robot may only be put into operation if the following preconditions are met:

- The industrial robot is integrated into a complete system.
  or: The industrial robot, together with other machinery, constitutes a complete system.
  or: All safety functions and safeguards required for operation in the complete machine as defined by the EC Machinery Directive have been added to the industrial robot.
- The complete system complies with the EC Machinery Directive. This has been confirmed by means of a conformity assessment procedure.

EC declaration of conformity

The system integrator must issue an EC declaration of conformity for the complete system in accordance with the Machinery Directive. The EC declaration of conformity forms the basis for the CE mark for the system. The industrial robot must always be operated in accordance with the applicable national laws, regulations and standards.

The robot controller has a CE mark in accordance with the EMC Directive and the Low Voltage Directive.

Declaration of incorporation

The partly completed machinery is supplied with a declaration of incorporation in accordance with Annex II B of the Machinery Directive 2006/42/EC. The assembly instructions and a list of essential requirements complied with in accordance with Annex I are integral parts of this declaration of incorporation.

The declaration of incorporation declares that the start-up of the partly completed machinery is not allowed until the partly completed machinery has been incorporated into machinery, or has been assembled with other parts to form machinery, and this machinery complies with the terms of the EC Machinery Directive, and the EC declaration of conformity is present in accordance with Annex II A.

3.1.3 Terms in the “Safety” chapter

Term	Description
Axis range	Range within which the axis may move The axis range must be defined for each axis.
Stopping distance	Stopping distance = reaction distance + braking distance The stopping distance is part of the danger zone.
Workspace	Area within which the robot may move. The workspace is derived from the individual axis ranges.
User	The user of the industrial robot can be the management, employer or delegated person responsible for use of the industrial robot.

Service life	The service life of a safety-relevant component begins at the time of delivery of the component to the customer. The service life is not affected by whether the component is used or not, as safety-relevant components are also subject to aging during storage.
Danger zone	The danger zone consists of the workspace and the stopping distances of the manipulator and external axes (optional).
KCP	KUKA Control Panel Teach pendant for the KR C2/KR C2 edition2005 The KCP has all the operator control and display functions required for operating and programming the industrial robot.
KUKA smartPAD	see “smartPAD”
KUKA smartPAD-2	see “smartPAD”
Manipulator	The robot arm and the associated electrical installations
Safety zone	The safety zone is situated outside the danger zone.
smartPAD	Teach pendant for the robot controller The smartPAD has all the operator control and display functions required for operation and programming. The following models exist: • KUKA smartPAD • KUKA smartPAD-2 • KUKA smartPAD pro For robot controllers of the KR C5 series with KUKA System Software or VW System Software, only the model **KUKA smartPAD-2** is used. For robot controllers of the KR C5 series with KUKA iiQKA.OS, only the model **KUKA smartPAD pro** is used. For other robot controllers, the designation “KUKA smartPAD” or “smartPAD” always refers to all models possible for the respective controller unless an explicit distinction is made.
Stop categories	**Note:** Information about the stop categories for KUKA robot controllers can be found in the “Safety” chapter of the robot controller assembly instructions.
System integrator (plant integrator)	The system integrator is responsible for safely integrating the industrial robot into a complete system and commissioning it.
T1	Test mode, Manual Reduced Velocity (<= 250 mm/s) **For KUKA iiQKA.OS:** With manual guidance in T1, the velocity is not reduced, but rather limited through a safety-oriented velocity monitoring in accordance with the safety configuration.
T2	**For KUKA iiQKA.OS:** not relevant at present **For KUKA System Software / VW System Software:** Test mode, Manual High Velocity (> 250 mm/s permissible)

External axis

For KUKA iiQKA.OS: not relevant at present

For KUKA System Software / VW System Software:

Axis of motion that does not belong to the manipulator, yet is controlled with the robot controller. For example, KUKA linear unit, turn-tilt table and positioner

3.2 Personnel

The following persons or groups of persons are defined for the industrial robot:

- User
- Personnel

Qualification of personnel
Work on the system must only be performed by personnel that is able to assess the tasks to be carried out and detect potential hazards. Death, severe injuries or damage to property may otherwise result. The following qualifications are required:

- Adequate specialist training, knowledge and experience
- Knowledge of the relevant operating or assembly instructions, knowledge of the relevant standards
- All persons working with the industrial robot must have read and understood the industrial robot documentation, including the safety chapter.

User

The user must observe the labor laws and regulations. This includes e.g.:

- The user must comply with his monitoring obligations.
- The user must carry out briefing at defined intervals.
- The user must comply with the regulations relating to personal protective equipment (PPE).

Personnel

Personnel must be instructed, before any work is commenced, in the type of work involved and what exactly it entails as well as any hazards which may exist. Instruction must be carried out regularly. Instruction is also required after particular incidents or technical modifications.

Personnel includes:

- System integrator
- Operators, subdivided into:
  - Start-up, maintenance and service personnel
  - Operating personnel
  - Cleaning personnel

System integrator

The industrial robot is safely integrated into a complete system by the system integrator.

The system integrator is responsible for the following tasks:

- Installing the industrial robot

- Connecting the industrial robot
- Performing the risk assessment
- Implementing the required safety functions and safeguards
- Issuing the EC declaration of conformity
- Affixing the CE mark
- Creating the operating instructions for the system

Operators

The operator must meet the following preconditions:

- The operator must be trained for the work to be carried out.
- Work on the system must only be carried out by qualified personnel. These are people who, due to their specialist training, knowledge and experience, and their familiarization with the relevant standards, are able to assess the work to be carried out and detect any potential hazards.

3.3 Workspace, safety zone and danger zone

Workspaces are to be restricted to the necessary minimum size.

The danger zone consists of the workspace and the stopping distances of the manipulator and external axes (optional). The danger zone must be protected by means of physical safeguards to prevent danger to persons or the risk of material damage.

The safeguards (e.g. safety gate) must be located outside the danger zone. In the case of a stop, the manipulator and external axes (optional) are braked and come to a stop within the danger zone.

There must be no shearing or crushing hazards at the loading and transfer areas.

If there are no physical safeguards present, the requirements for collaborative operation in accordance with EN ISO 10218 must be met.

3.4 Overview of protective equipment

The protective equipment of the mechanical component may include:

- Mechanical end stops
- Mechanical axis limitation (optional)
- Release device (optional)
- Brake release device (optional)
- Labeling of danger areas

Not all equipment is relevant for every mechanical component.

3.4.1 Mechanical end stops

Depending on the robot variant, the axis ranges of the main and wrist axes of the manipulator are partially limited by mechanical end stops.

Additional mechanical end stops can be installed on the external axes.

WARNING

Danger to life and limb following collision with obstacle
If the manipulator or an external axis hits an obstruction or a mechanical end stop or mechanical axis limitation, the manipulator can no longer be operated safely. Death, injuries or damage to property may result.

- Put manipulator out of operation.
- Put external axis out of operation.
- KUKA must be consulted before they are put back into operation.

3.4.2 Mechanical axis limitation (optional)

Some manipulators can be fitted with adjustable mechanical axis limitation systems in axes A1 to A3. The axis limitation systems restrict the working range to the required minimum. This increases personal safety and protection of the system.

In the case of manipulators that are not designed to be fitted with mechanical axis limitation, the workspace must be laid out in such a way that there is no danger to persons or material property, even in the absence of mechanical axis limitation.

If this is not possible, the workspace must be limited by means of photoelectric barriers, photoelectric curtains or mechanical limitations on the system side. There must be no shearing or crushing hazards at the loading and transfer areas.

This option is not available for all robot models. Information on specific robot models can be obtained from the manufacturer.

3.4.3 Options for moving the manipulator without drive energy

Qualification of personnel with regard to behavior in emergency situations
In emergencies or other exceptional situations, it may be necessary to move the manipulator without drive energy.

- Personnel must be trained in how to move the manipulator without drive energy.

Description

The following options may be available for moving the manipulator without drive energy after an accident or malfunction:

- Release device (optional)
  The release device can be used for the main axis drive motors and, depending on the robot variant, also for the wrist axis drive motors.
- Brake release device (option)
  The brake release device is designed for robot variants whose motors are not freely accessible.
- Moving the wrist axes directly by hand
  There is no release device available for the wrist axes of variants in the low payload category. This is not necessary because the wrist axes can be moved directly by hand.

Information about the options available for the various robot models and about how to use them can be found in the assembly and operating instructions for the robot or can be requested from the manufacturer.

3.4.4 Labeling on the industrial robot

All plates, labels, symbols and marks constitute safety-relevant parts of the industrial robot. They must not be modified or removed.

Labeling on the industrial robot consists of:

- Identification plates
- Warning signs
- Safety symbols
- Designation labels
- Cable markings
- Rating plates

Further information is contained in the technical data of the operating instructions or assembly instructions of the components of the industrial robot.

3.5 Safety measures

3.5.1 General safety measures

The industrial robot may only be used in perfect technical condition in accordance with its intended use and only by safety-conscious persons. Operator errors can result in personal injury and damage to property.

It is important to be prepared for possible movements of the industrial robot even after the robot controller has been switched off and locked out. Incorrect installation (e.g. overload) or mechanical defects (e.g. brake defect) can cause the manipulator or external axes to sag. If work is to be carried out on a switched-off industrial robot, the manipulator and external axes must first be moved into a position in which they are unable to move on their own, whether the payload is mounted or not. If this is not possible, the manipulator and external axes must be secured by appropriate means.

DANGER

Risk of fatal injury due to non-operational safety functions or external safeguards

In the absence of operational safety functions or safeguards, the industrial robot can cause death, severe injuries or damage to property.

- If safety functions or safeguards are dismantled or deactivated, do not operate the industrial robot.

DANGER

Danger to life and limb of persons under the robot arm

Sagging or falling parts can cause death or serious injuries. This applies at all times, e.g. also for assembly tasks or with the controller switched off.

- Never loiter under the robot arm.

CAUTION

Risk of burns from hot motors

The motors reach temperatures during operation which can cause burns.

- Avoid contact.
- Take appropriate safety precautions, e.g. wear protective gloves.

Implants

WARNING

Danger to life due to malfunction of implants caused by motors and brakes
Electric motors and brakes generate electric and magnetic fields. The fields can cause malfunctions in active implants, e.g. pacemakers.

- Affected persons must maintain a minimum distance of 300 mm from motors and brakes. This applies to both energized and deenergized motors and brakes.

KCP/smartPAD

The user must ensure that the industrial robot is only operated with the KCP/smartPAD by authorized persons.

If more than one KCP/smartPAD is used in the overall system, it must be ensured that each device is unambiguously assigned to the corresponding industrial robot. They must not be interchanged.

WARNING

Danger to life due to disconnected smartPAD/KCP
If a smartPAD/KCP is disconnected, its EMERGENCY STOP device is not operational. There is a risk of connected and disconnected smartPADs/KCPs being interchanged. Death, injuries or damage to property may result.

- Remove the disconnected smartPAD/KCP from the system immediately.
- Store the disconnected smartPAD/KCP out of sight and reach of personnel working on the industrial robot.

The enabling switches on the smartPAD must be subjected to a function test at least once every 12 months and in certain specific cases.

Information about function testing for KUKA robot controllers can be found in the “Safety” chapter of the operating or assembly instructions of the robot controller.

External keyboard, external mouse

An external keyboard and/or external mouse may only be used if the following conditions are met:

- Start-up or maintenance work is being carried out.
- The drives are switched off.
- There are no persons in the danger zone.

The KCP/smartPAD must not be used as long as an external keyboard and/or external mouse are connected to the control cabinet.

The external keyboard and/or external mouse must be removed from the control cabinet as soon as the start-up or maintenance work is completed or the KCP/smartPAD is connected.

Modifications

After modifications to the industrial robot, checks must be carried out to ensure the required safety level. The valid national or regional work safety regulations must be observed for this check. The correct functioning of all safety functions must also be tested.

New or modified programs must always be tested first in Manual Reduced Velocity mode (T1).

After modifications to the industrial robot, existing programs must always be tested first in Manual Reduced Velocity mode (T1). This applies to all components of the industrial robot and includes e.g. modifications of the external axes or to the software and configuration settings.

Faults

In the case of faults on the industrial robot, the following safety measures must be implemented immediately:

- Switch off the robot controller and secure it (e.g. with a padlock) to prevent unauthorized persons from switching it on again.
- Indicate the fault by means of a label with a corresponding warning (tagout).
- Keep a record of the faults.

Carry out a functional test after the fault has been rectified.

3.5.2 Transportation

Manipulator

The prescribed transport position of the manipulator must be observed. Transportation must be carried out in accordance with the operating instructions or assembly instructions of the robot.

Avoid vibrations and impacts during transportation in order to prevent damage to the manipulator.

Robot controller

The prescribed transport position of the robot controller must be observed. Transportation must be carried out in accordance with the operating instructions or assembly instructions of the robot controller.

Avoid vibrations and impacts during transportation in order to prevent damage to the robot controller.

External axis (optional)

The prescribed transport position of the external axis (e.g. KUKA linear unit, turn-tilt table, positioner) must be observed. Transportation must be carried out in accordance with the operating instructions or assembly instructions of the external axis.

3.5.3 Start-up and recommissioning

Before starting up systems and devices for the first time, a check must be carried out to ensure that the systems and devices are complete and operational, that they can be operated safely and that any damage is detected.

The valid national or regional work safety regulations must be observed for this check. The correct functioning of all safety circuits must also be tested.

Changing default passwords
The system software is supplied with default passwords for the user groups. If the passwords are not changed, this enables unauthorized persons to log on.

- Before start-up, change the passwords for the user groups.
- Only communicate the passwords to authorized personnel.

WARNING

Danger to life and limb due to incorrectly assigned cables
The robot controller is preconfigured for the specific industrial robot. The manipulator and other components can receive incorrect data if they are connected to a different robot controller. Death, severe injuries or damage to property may result.

- Only connect the manipulator to the corresponding robot controller.

Do not impair safety functions
Additional components (e.g. cables and hoses) not supplied by KUKA may be integrated into the industrial robot. If the safety functions are not taken into consideration, this may result in death, severe injuries or damage to property.

- Additional components must not impair or disable safety functions.

NOTICE

Damage to property due to condensation
If the internal cabinet temperature of the robot controller differs greatly from the ambient temperature, condensation can form. This may result in damage to property.

- Wait until the internal cabinet temperature has adapted to the ambient temperature in order to avoid condensation.

Function test

The following tests must be carried out before start-up and recommissioning:

It must be ensured that:

- The industrial robot is correctly installed and fastened in accordance with the specifications in the documentation.
- There is no damage to the robot that could be attributed to external forces. Example: Dents or abrasion that could be caused by an impact or collision.

WARNING

Danger to life and limb resulting from external forces
The external application of force, such as an impact or a collision, can cause non-visible damage. For example, it can lead to a gradual loss of drive power from the motor, resulting in unintended movements of the manipulator.
Death, severe injuries or damage to property may result from non-visible damage.

- Check the robot for damage that could have been caused by external forces, e.g. dents or abrasion of paintwork.

  Check the motor and counterbalancing system particularly carefully.

  (Motor inspection not relevant for robots with internal motors.)
- In the case of damage, the affected components must be exchanged.

- There are no foreign bodies or defective or loose parts on the industrial robot.
- All required safety equipment is correctly installed and operational.
- The power supply ratings of the industrial robot correspond to the local supply voltage and mains type.

- The ground conductor and the equipotential bonding cable are sufficiently rated and correctly connected.
- The connecting cables are correctly connected and the connectors are locked.

3.5.4 Manual mode

General

Manual mode is the mode for setup work. Setup work is all the tasks that have to be carried out on the industrial robot to enable automatic operation. Setup work includes:

- Jog mode
- Teaching
- Programming
- Program verification

The following must be taken into consideration in manual mode:

- New or modified programs must always be tested first in Manual Reduced Velocity mode (T1).
- The manipulator, tooling or external axes (optional) must never touch or project beyond the safety fence.
- Workpieces, tooling and other objects must not jam as a result of the industrial robot motion, nor must they lead to short-circuits or be liable to fall off.
- All setup work must be carried out, where possible, from outside the safeguarded area.

Setup work in T1

If it can be avoided, there must be no persons inside the safeguarded area.

If it is necessary to carry out setup work from inside the safeguarded area, the following must be taken into consideration in the operating mode **Manual Reduced Velocity (T1)**:

- If it can be avoided, there must be no more than one person inside the safeguarded area.
- If it is necessary for there to be several persons inside the safeguarded area, the following must be observed:
  - Each person must have an enabling device.
  - All persons must have an unimpeded view of the industrial robot.
  - Eye-contact between all persons must be possible at all times.
- The operator must be so positioned that he can see into the danger zone and get out of harm's way.
- Unexpected motions of the manipulator cannot be ruled out, e.g. in the event of a fault. For this reason, an appropriate clearance must be maintained between persons and the manipulator, including the tool. Guide value: 50 cm.

  The minimum clearance may vary depending on local circumstances, the motion program and other factors. The minimum clearance that is to apply for the specific application must be decided by the user on the basis of a risk assessment.

Setup work in T2

If it is necessary to carry out setup work from inside the safeguarded area, the following must be taken into consideration in the operating mode **Manual High Velocity (T2)**:

- This mode may only be used if the application requires a test at a velocity higher than that possible in T1 mode.
- Teaching and programming are not permissible in this operating mode.
- Before commencing the test, the operator must ensure that the enabling devices are operational.
- The operator must be positioned outside the danger zone.
- There must be no other persons inside the safeguarded area. It is the responsibility of the operator to ensure this.

3.5.5 Automatic mode

Automatic mode is only permissible in compliance with the following safety measures:

- All safety equipment and safeguards are present and operational.
- There are no persons in the system or the requirements for collaborative operation in accordance with EN ISO 10218 have been met.
- The defined working procedures are adhered to.

If the manipulator or an external axis (optional) comes to a standstill for no apparent reason, the danger zone must not be entered until an EMERGENCY STOP has been triggered.

3.5.6 Maintenance and repair

After maintenance and repair work, checks must be carried out to ensure the required safety level. The valid national or regional work safety regulations must be observed for this check. The correct functioning of all safety functions must also be tested.

The purpose of maintenance and repair work is to ensure that the system is kept operational or, in the event of a fault, to return the system to an operational state. Repair work includes troubleshooting in addition to the actual repair itself.

The following safety measures must be carried out when working on the industrial robot:

- Carry out work outside the danger zone. If work inside the danger zone is necessary, the user must define additional safety measures to ensure the safe protection of personnel.
- Switch off the industrial robot and secure it (e.g. with a padlock) to prevent it from being switched on again. If it is necessary to carry out work with the robot controller switched on, the user must define additional safety measures to ensure the safe protection of personnel.
- If it is necessary to carry out work with the robot controller switched on, this may only be done in operating mode T1.
- Label the system with a sign indicating that work is in progress. This sign must remain in place, even during temporary interruptions to the work.
- The EMERGENCY STOP devices must remain active. If safety functions or safeguards are deactivated during maintenance or repair work, they must be reactivated immediately after the work is completed.

DANGER

Danger to life and limb due to live parts
The robot system must be disconnected from the mains power supply prior to work on live parts. It is not sufficient to trigger an EMERGENCY STOP or safety stop, because parts remain live. Death or severe injuries may result.

- Before commencing work on live parts, turn off the main switch and secure it against being switched on again.

  If the controller variant in question does not have a main switch (e.g. KR C5 micro), turn off the device switch then disconnect the power cable and secure it so it cannot be reconnected.
- Then check to ensure that the system is deenergized.
- Inform the individuals involved that the robot controller is switched off. (e.g. by affixing a warning sign)

Faulty components must be replaced using new components with the same article numbers or equivalent components approved by the manufacturer for this purpose.

Cleaning and preventive maintenance work is to be carried out in accordance with the operating instructions.

Robot controller

Even when the robot controller is switched off, parts connected to peripheral devices may still carry voltage. The external power sources must therefore be switched off if work is to be carried out on the robot controller.

The ESD regulations must be adhered to when working on components in the robot controller.

Voltages in excess of 50 V (up to 780 V) can be present in various components for several minutes after the robot controller has been switched off! To prevent life-threatening injuries, no work may be carried out on the industrial robot in this time.

On robot controllers with transformers, the transformers must be disconnected before working on components in the robot controller.

Water and dust must be prevented from entering the robot controller.

Counterbalancing system

Some robot variants are equipped with a hydropneumatic, spring or gas cylinder counterbalancing system.

- **Counterbalancing system classified below category I**: Is subject to the Pressure Equipment Directive but exempt from application of the Pressure Equipment Directive according to Art. 4, para. 3 and therefore not CE marked.
- **Counterbalancing system classified as category I or higher**: Is subject to the Pressure Equipment Directive and CE marked as a component (see rating plate of the counterbalancing system). The pressure equipment is placed on the market in conjunction with partly completed machinery. Conformity is expressed on the declaration of incorporation according to the Machinery Directive.

The user must comply with the applicable national laws, regulations and standards pertaining to pressure equipment.

- In Germany, the counterbalancing system is work equipment according to the German Ordinance on Industrial Safety and Health (BetrSichV). Inspection intervals in Germany in accordance with the Ordinance on

Industrial Safety and Health, Sections 14 and 15. Inspection by the user before commissioning at the installation site.

- Inspection intervals in all other countries must be researched and observed. As a rule, however, at least the maintenance intervals specified by KUKA must be observed. These must not be exceeded.

The following safety measures must be carried out when working on the counterbalancing system:

- The assemblies supported by the counterbalancing systems must be secured.
- Work on the counterbalancing systems must only be carried out by qualified personnel.

Hazardous substances

The following safety measures must be carried out when handling hazardous substances:

- Avoid prolonged and repeated intensive contact with the skin.
- Avoid breathing in oil spray or vapors.
- Clean skin and apply skin cream.

Use current safety data sheets
Knowledge of the safety data sheets of the substances and mixtures used is a prerequisite for the safe use of KUKA products. Death, injuries or damage to property may otherwise result.

- Request up-to-date safety data sheets from the manufacturers of hazardous substances regularly.

3.5.7 Decommissioning, storage and disposal

The industrial robot must be decommissioned, stored and disposed of in accordance with the applicable national laws, regulations and standards.

4 Technical data

4.1 Technical data, overview

The technical data for the individual robot types can be found in the following sections:

Robot	Technical data
KR 120 R3500-2 P	• Technical data (>>> *4.2 "Technical data, KR 120 R3500-2 P" Page 34*) • Plates and labels (>>> *4.11 "Plates and labels" Page 141*) • Stopping distances and stopping times (>>> *4.13.2 "Stopping distances and times, KR 120 R3500-2 P and KR 120 R3500-2 P-C" Page 146*)
KR 120 R3500-2 P-C	• Technical data (>>> *4.3 "Technical data, KR 120 R3500-2 P-C" Page 46*) • Plates and labels (>>> *4.11 "Plates and labels" Page 141*) • Stopping distances and stopping times (>>> *4.13.2 "Stopping distances and times, KR 120 R3500-2 P and KR 120 R3500-2 P-C" Page 146*)
KR 120 R3900-2 K	• Technical data (>>> *4.4 "Technical data, KR 120 R3900-2 K" Page 57*) • Plates and labels (>>> *4.11 "Plates and labels" Page 141*) • Stopping distances and stopping times (>>> *4.13.3 "Stopping distances and times, KR 120 R3900-2 K" Page 153*)
KR 180 R3500-2 K	• Technical data (>>> *4.5 "Technical data, KR 180 R3500-2 K" Page 68*) • Plates and labels (>>> *4.11 "Plates and labels" Page 141*) • Stopping distances and stopping times (>>> *4.13.4 "Stopping distances and times, KR 180 R3500-2 K and KR 180 R3500-2 K-F" Page 158*)
KR 180 R3500-2 K-F	• Technical data (>>> *4.6 "Technical data, KR 180 R3500-2 K-F" Page 79*) • Plates and labels (>>> *4.11 "Plates and labels" Page 141*) • Stopping distances and stopping times (>>> *4.13.4 "Stopping distances and times, KR 180 R3500-2 K and KR 180 R3500-2 K-F" Page 158*)

Robot	Technical data
KR 210 R3300-2 K	• Technical data (>>> *4.7 "Technical data, KR 210 R3300-2 K" Page 91*) • Plates and labels (>>> *4.11 "Plates and labels" Page 141*) • Stopping distances and stopping times (>>> *4.13.5 "Stopping distances and times, KR 210 R3300-2 K and KR 210 R3300-2 K-F" Page 164*)
KR 210 R3300-2 K-F	• Technical data (>>> *4.8 "Technical data, KR 210 R3300-2 K-F" Page 103*) • Plates and labels (>>> *4.11 "Plates and labels" Page 141*) • Stopping distances and stopping times (>>> *4.13.5 "Stopping distances and times, KR 210 R3300-2 K and KR 210 R3300-2 K-F" Page 164*)
KR 270 R3100-2 K	• Technical data (>>> *4.9 "Technical data, KR 270 R3100-2 K" Page 116*) • Plates and labels (>>> *4.11 "Plates and labels" Page 141*) • Stopping distances and stopping times (>>> *4.13.6 "Stopping distances and times, KR 270 R3100-2 K and KR 270 R3100-2 K-F" Page 170*)
KR 270 R3100-2 K-F	• Technical data (>>> *4.10 "Technical data, KR 270 R3100-2 K-F" Page 128*) • Plates and labels (>>> *4.11 "Plates and labels" Page 141*) • Stopping distances and stopping times (>>> *4.13.6 "Stopping distances and times, KR 270 R3100-2 K and KR 270 R3100-2 K-F" Page 170*)

4.2 Technical data, KR 120 R3500-2 P

4.2.1 Basic data, KR 120 R3500-2 P

Basic data

	KR 120 R3500-2 P
Number of axes	6
Number of controlled axes	6
Volume of working envelope	150.5 m³
Pose repeatability (ISO 9283)	± 0.05 mm
Weight	approx. 1281 kg
Rated payload	120 kg
Maximum payload	180 kg
Maximum reach	3505 mm
Protection rating (IEC 60529)	IP65

	KR 120 R3500-2 P
Protection rating, robot wrist (IEC 60529)	IP65 / IP67
Sound level	< 75 dB (A)
Mounting position	Floor
Footprint	754 mm x 754 mm
Hole pattern: mounting surface for kinematic system	S780
Permissible angle of inclination	± 0 °
Default color	Base frame: black (RAL 9005); Moving parts: KUKA Industrial Orange (RAL 2009)
Controller	KR C5 M6/M7; KR C4
Transformation name	KR C4: KR120R3500P_2 FLR; KR C5: KR120R3500P_2 FLR

The manipulator is designed in such a way that, in accordance with standard IEC 60529, no water can penetrate into electrical equipment spaces in normal operation. Water spray and corrosive additives can nevertheless lead to corrosion (rust) on uncoated parts. In this case, it is advisable to provide the equipment with corrosion protection. Corrosion does not represent a defect as defined by the standard, as long as it does not have a detrimental effect on the protection rating. The protection rating is valid in the case of compliance with the specified ambient conditions.

Ambient conditions

Humidity class (EN 60204)	-
Classification of environmental conditions (EN 60721-3-3)	-
Cleanroom class (ISO 14644-1)	-
Ambient temperature	
During operation	0 °C to 40 °C (273 K to 313 K)
During storage/transportation	-40 °C to 60 °C (233 K to 333 K)

For operation at low temperatures, it may be necessary to warm up the robot.

During operation in the low-temperature range, frost and condensation must be avoided, as damage to property may otherwise arise.

Connecting cables, KR C4

Cable designation	Connector designation robot controller - robot	Interface with robot
Motor cable	X20 - X30	Han® 16HP
Data cable	X21 - X31	Han® 3A Q12
Ground conductor / equipotential bonding 16 mm^2		M8 ring cable lug at both ends

Cable lengths	7 m, 10 m, 15 m, 20 m, 25 m, 30 m, 35 m, 50 m
Max. cable length	50 m
Number of extensions	1

For detailed specifications of the connecting cables, see (>>> *7.4 "Description of the connecting cables, KR C4" Page 209*).

Connecting cables, KR C5

Cable designation	Connector designation robot controller - robot	Interface with robot
Motor cable	6 motor connectors: XD20.1 … XD20.6 - XD30 2 brake connectors: XD10.1, XD10.2 - XD30	Han® 16HP
Data cable	XF21 - XF31	Han® 3A Q12
Ground conductor / equipotential bonding 16 mm^2		M8 ring cable lug at both ends

Cable lengths	7 m, 10 m, 15 m, 20 m, 25 m, 30 m, 35 m, 50 m
Max. cable length	50 m
Number of extensions	1

For detailed specifications of the connecting cables, see (>>> *7.5 "Description of the connecting cables, KR C5" Page 213*).

4.2.2 Axis data, KR 120 R3500-2 P

Axis data

Motion range	
A1	±185 °
A2	-120 ° / 70 °
A3	-120 ° / 168 °
A4	±350 °
A5	±122.5 °
A6	±350 °
Speed with rated payload	
A1	112 °/s
A2	107 °/s
A3	114 °/s
A4	150 °/s
A5	129 °/s
A6	219 °/s

Direction of rotation of robot axes

The following diagram shows the direction of motion and the arrangement of the individual axes for the listed variants of this product family.

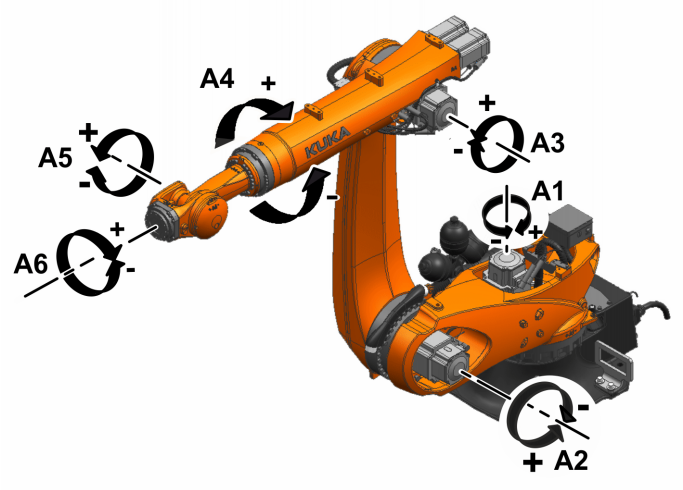

Fig. 4-1: Direction of rotation of the axes

Mastering positions

Mastering position	
A1	-25 °
A2	-100 °
A3	100 °
A4	0 °
A5	0 °
A6	0 °

Working envelope

The following diagrams show the shape and size of the working envelope for these variants of this product family.

The reference point for the working envelope is the intersection of axes 4 and 5.

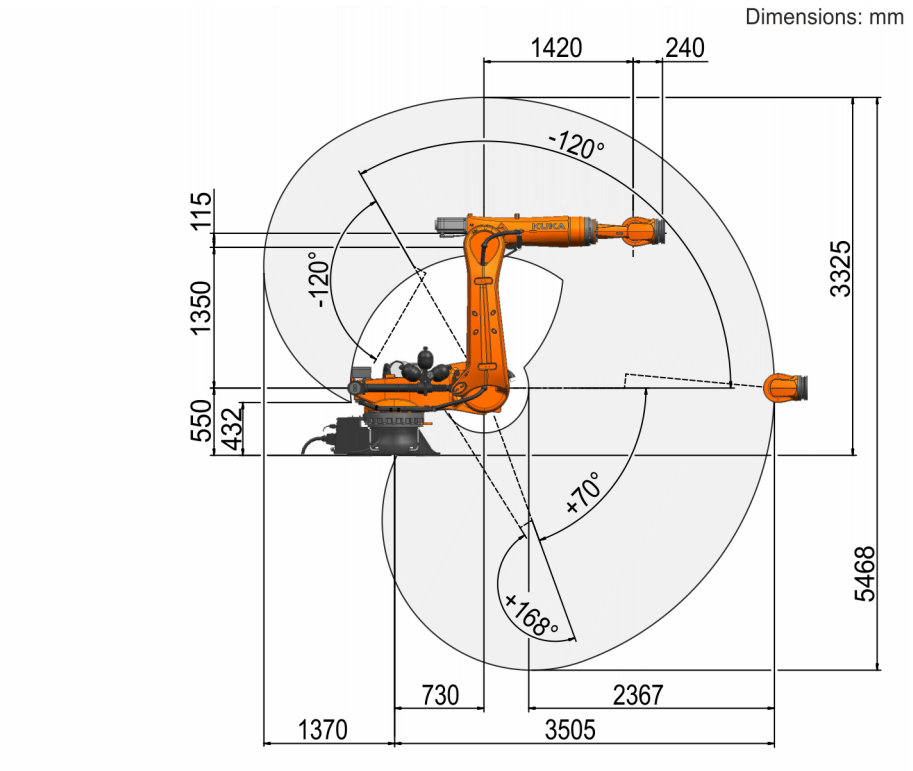

Fig. 4-2: KR 120 R3500-2 P, working envelope, side view

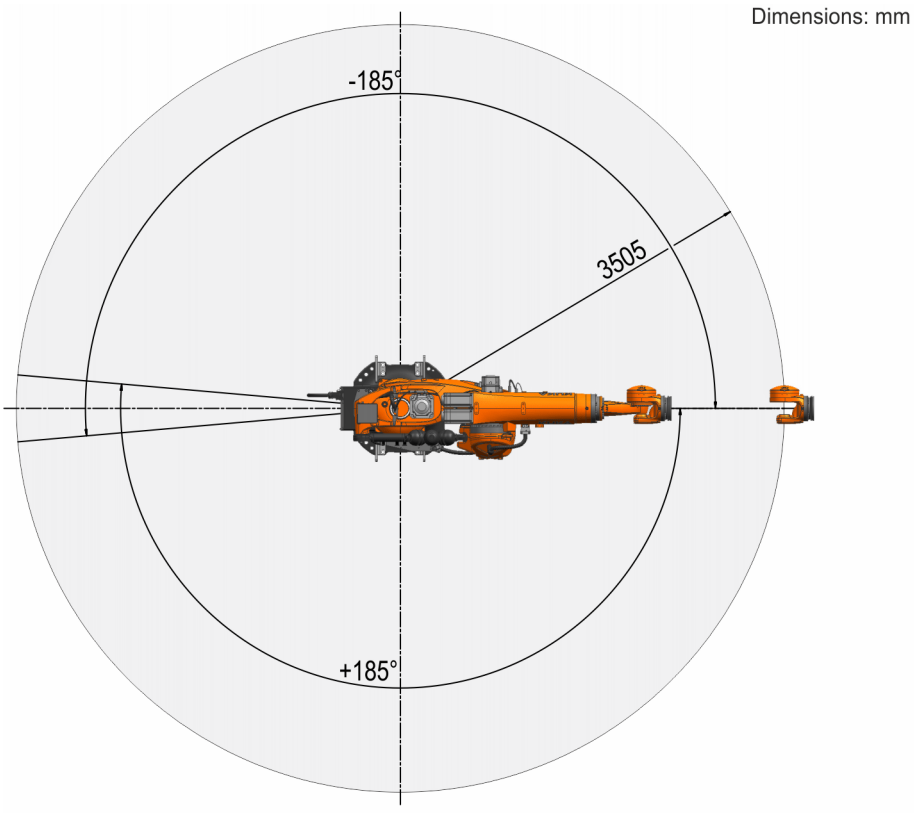

Fig. 4-3: KR 120 R3500-2 P, working envelope, top view

4.2.3 Payloads, KR 120 R3500-2 P

Payloads

Rated payload	120 kg
Maximum payload	180 kg
Rated supplementary load, base frame	0 kg
Maximum supplementary load, base frame	0 kg
Rated supplementary load, rotating column	0 kg
Maximum supplementary load, rotating column	300 kg
Rated supplementary load, link arm	0 kg
Maximum supplementary load, link arm	130 kg
Rated supplementary load, arm	50 kg
Maximum supplementary load, arm	150 kg

Load center of gravity and mass moment of inertia

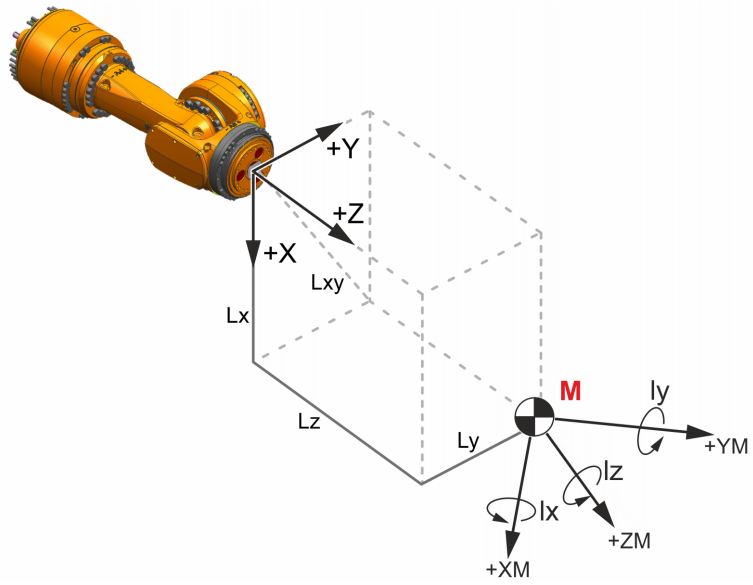

Fig. 4-4: Load center of gravity and mass moment of inertia

Parameter

Parameter/unit		Description
Mass	kg	Payload mass
L_x, L_y, L_z	mm	Position of the center of mass in the reference system

Parameter/unit		Description
A, **B**, **C**	Degrees	Orientation of the principal inertia axes • A: Rotation about the Z axis of the reference system The result is a coordinate system named CS'. • B: Rotation about the Y axis of CS' Result: CS'' • C: Rotation about the X axis of CS'' **Note:** A, B and C are not shown in the diagram.
Mass moments of inertia:		
$\mathbf{I_x}$	kgm^2	Inertia about the X axis of the main axis system
$\mathbf{I_y}$	kgm^2	Inertia about the Y axis of the main axis system
$\mathbf{I_z}$	kgm^2	Inertia about the Z axis of the main axis system

L_x, L_y, L_z and A, B, C unambiguously define the main axis system:

- The origin of the main axis system is the center of mass.
- A characteristic feature of the main axis system is that, among other things, the maximum possible inertia occurs about one of the 3 coordinate axes.

Further information is contained in the **KUKA Load** documentation.

Payload diagram

NOTICE

This loading curve corresponds to the maximum load capacity. Both values (payload and mass moment of inertia) must be checked in all cases. Exceeding this capacity will reduce the service life of the robot and overload the motors and the gears; in any such case KUKA Service must be consulted beforehand.
The values determined here are necessary for planning the robot application. For start-up of the robot, additional input data are required in accordance with the documentation for the system software.
The mass inertia must be verified using KUKA Load. It is imperative for the load data to be entered in the robot controller!

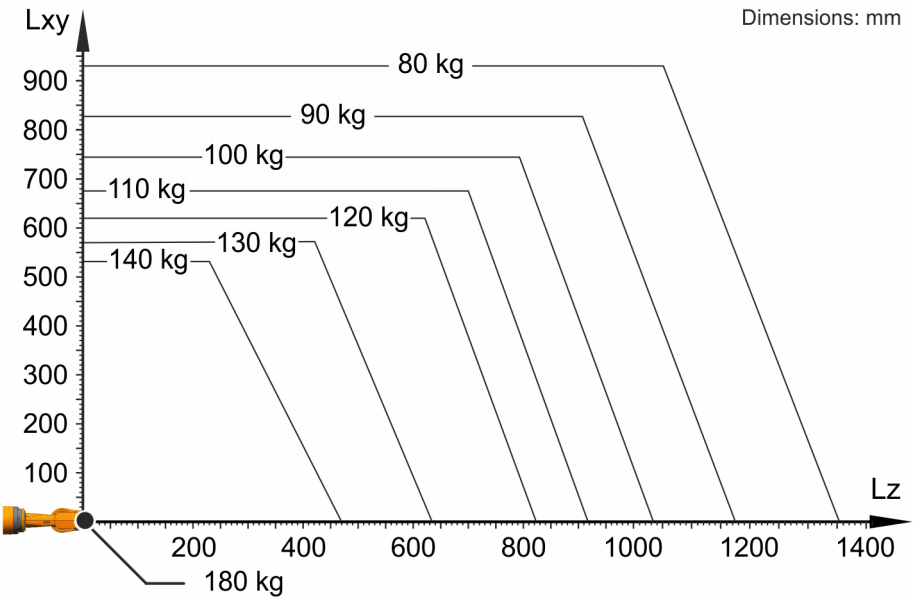

Fig. 4-5: Payload diagram, KR 120 R3500-2 P

The KR 120 R3500-2 P is designed for a rated payload of 120 kg in order to optimize the dynamic performance of the robot. With reduced load center distances and favorable supplementary loads, a maximum payload of up to 180 kg can be mounted. The specific KUKA Load case must be verified using KUKA. For further consultation, please contact KUKA Service.

Mounting flange

Robot wrist type	ZH300
Mounting flange standard	Deviation, see figure

Mounting flange (hole circle)	160 mm
Thread diameter	M10
Depth of engagement	min. 15 mm, max. 19 mm
Number of threads	11
Screw grade	10.9
Locating element	10 ^{H7}

The mounting flange is depicted with axes 4 and 6 in the zero position.

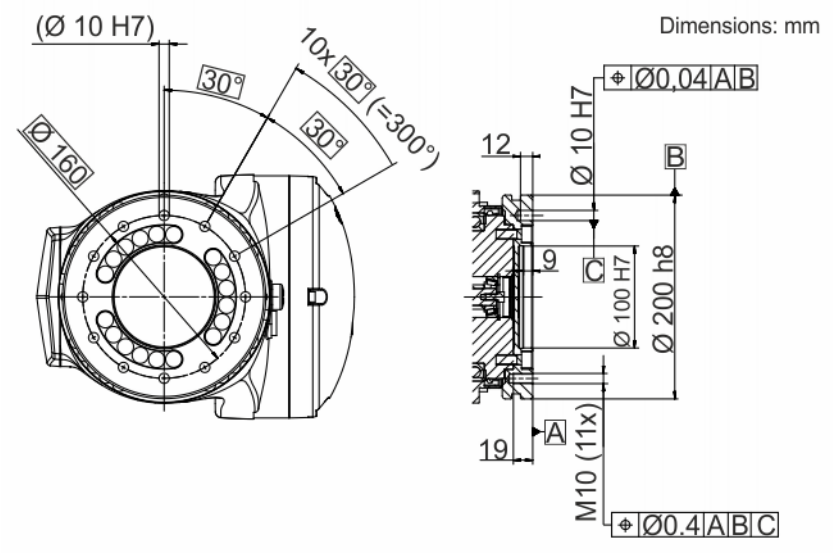

Fig. 4-6: Mounting flange D=160

Flange loads

The motion of the robot causes forces and torques to act on the mounting flange, which are transmitted to the mounted payload (e.g. tool).

The specified values refer to nominal payloads and do not include any safety factors. The actual forces and torques depend on the motion profile as well as the mass, load center of gravity and mass moment of inertia of the payload. It is imperative for the load data to be entered in the robot controller. The robot controller takes the payload into consideration during path planning.

The payload must be able to permanently withstand the forces and torques generated during normal operation.

The EMERGENCY STOP values only rarely occur during the service life of the robot (emergency situations). The frequency depends on the configuration of the system.

WARNING

Danger to life and limb due to insufficient stability of the tool
Incorrectly dimensioned tools can fracture and fail. Death, severe injuries or damage to property may result.

- Calculate the tool for each individual case, taking the load data into consideration.
- Use the specified installation equipment.

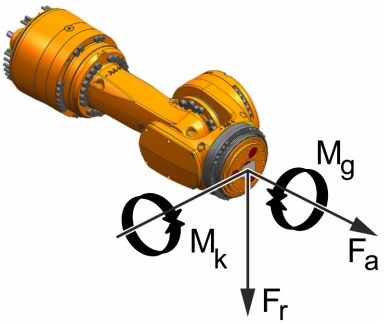

Fig. 4-7: Flange loads

Flange loads during operation	
F(a)	2550 N

F(r)	2550 N
M(k)	2900 Nm
M(g)	1600 Nm
Flange loads in the case of EMERGENCY STOP	
F(a)	4700 N
F(r)	6200 N
M(k)	7150 Nm
M(g)	5550 Nm

Axial force F(a), radial force F(r), tilting torque M(k), torque about mounting flange M(g)

Supplementary load

The robot can carry supplementary loads. When mounting the supplementary loads, be careful to observe the maximum permissible total load. The dimensions and positions of the installation options can be seen in the following diagrams.

Dimensions: mm

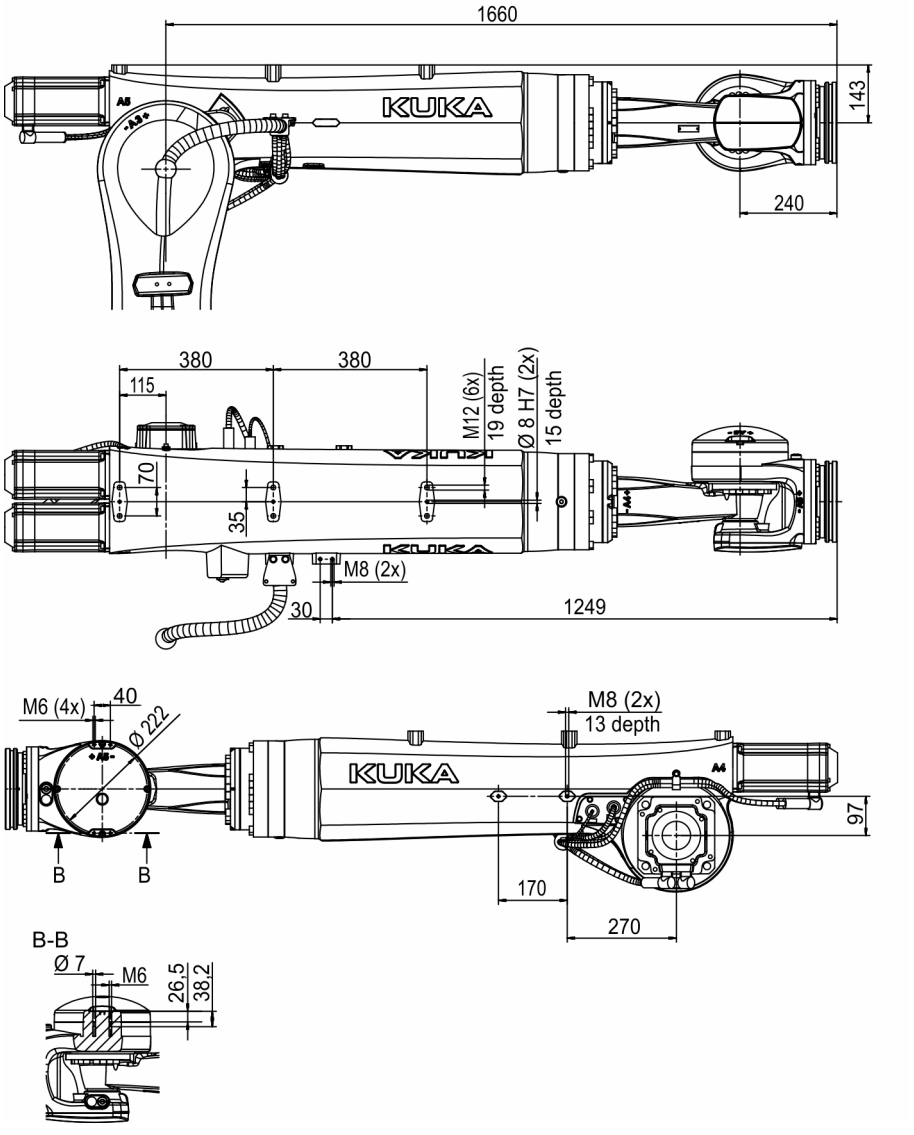

Fig. 4-8: Fastening of supplementary load on arm/in-line wrist, KR 120 R3500-2 P

Dimensions: mm

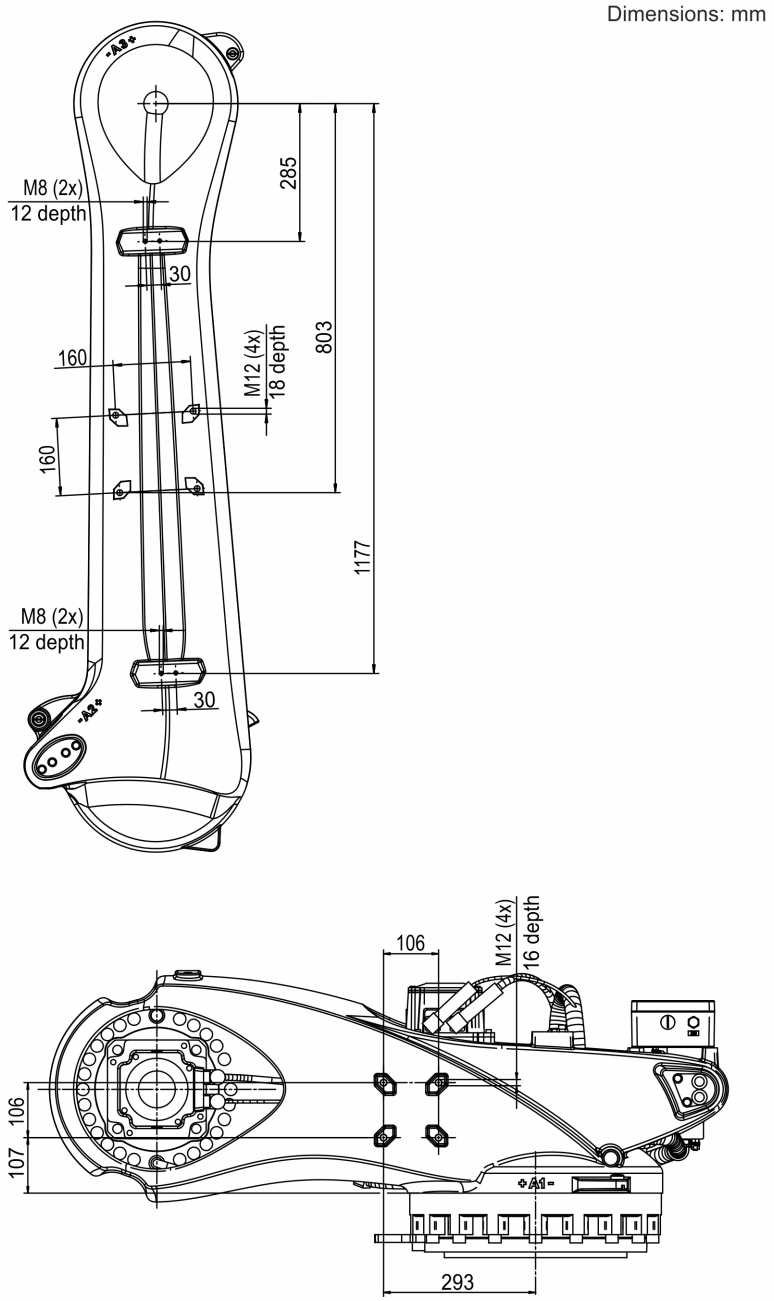

Fig. 4-9: Fastening of supplementary load on rotating column/link arm, KR 120 R3500-2 P

4.2.4 Foundation loads, KR 120 R3500-2 P

Depending on the payload (e.g. tool), supplementary load and the robot's own mass (weight), the motion of the robot generates forces and torques which are transmitted to the foundation.

The specified values refer to nominal payloads and do not include any safety factors. The actual forces and torques depend on the motion profile as well as the mass, load center of gravity and mass moment of inertia of the payload. It is imperative for the load data to be entered in the robot controller. The robot controller takes the payload into consideration during path planning.

Supplementary loads on A1 (rotating column) and A2 (link arm) are not taken into consideration in the calculation of the foundation load. These must be taken into account in the vertical force (F_v).

The foundation must be able to permanently withstand the forces and torques generated during normal operation.

The EMERGENCY STOP values only rarely occur during the service life of the robot (emergency situations). The frequency depends on the configuration of the system.

WARNING

Danger to life and limb due to insufficient stability of the foundation

An incorrectly dimensioned foundation can fracture and fail. Death, severe injuries or damage to property may result.

- Calculate the foundation loads for each individual case.
- Use the specified installation equipment.

Vertical force F(v)	
F(v normal)	18750 N
F(v max)	22250 N
Horizontal force F(h)	
F(h normal)	6750 N
F(h max)	18750 N
Tilting moment M(k)	
M(k normal)	26250 Nm
M(k max)	46000 Nm
Torque about axis 1 M(r)	
M(r normal)	11500 Nm
M(r max)	23000 Nm

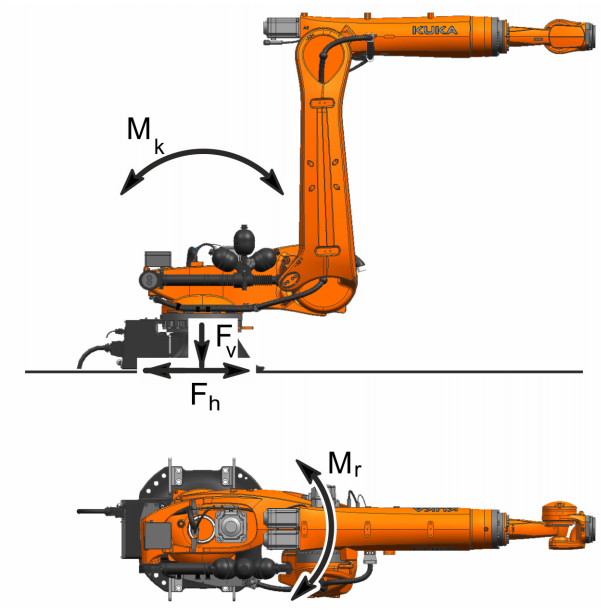

Fig. 4-10: Foundation loads

4.3 Technical data, KR 120 R3500-2 P-C

4.3.1 Basic data, KR 120 R3500-2 P-C

Basic data

	KR 120 R3500-2 P-C
Number of axes	6
Number of controlled axes	6
Volume of working envelope	116.2 m³
Pose repeatability (ISO 9283)	± 0.05 mm
Weight	approx. 1283 kg
Rated payload	120 kg
Maximum payload	180 kg
Maximum reach	3505 mm
Protection rating (IEC 60529)	IP65
Protection rating, robot wrist (IEC 60529)	IP65 / IP67
Sound level	< 75 dB (A)
Mounting position	Ceiling
Footprint	754 mm x 754 mm
Hole pattern: mounting surface for kinematic system	S780
Permissible angle of inclination	± 0 °
Default color	Base frame: black (RAL 9005); Moving parts: KUKA Industrial Orange (RAL 2009)
Controller	KR C5 M6/M7; KR C4
Transformation name	KR C4: KR120R3500P_2 CLG; KR C5: KR120R3500P_2 CLG

The manipulator is designed in such a way that, in accordance with standard IEC 60529, no water can penetrate into electrical equipment spaces in normal operation. Water spray and corrosive additives can nevertheless lead to corrosion (rust) on uncoated parts. In this case, it is advisable to provide the equipment with corrosion protection. Corrosion does not represent a defect as defined by the standard, as long as it does not have a detrimental effect on the protection rating. The protection rating is valid in the case of compliance with the specified ambient conditions.

Ambient conditions

Humidity class (EN 60204)	-
Classification of environmental conditions (EN 60721-3-3)	-
Cleanroom class (ISO 14644-1)	-
Ambient temperature	
During operation	0 °C to 40 °C (273 K to 313 K)

During storage/transportation	-40 °C to 60 °C (233 K to 333 K)

For operation at low temperatures, it may be necessary to warm up the robot.

During operation in the low-temperature range, frost and condensation must be avoided, as damage to property may otherwise arise.

Connecting cables, KR C4

Cable designation	Connector designation robot controller - robot	Interface with robot
Motor cable	X20 - X30	Han® 16HP
Data cable	X21 - X31	Han® 3A Q12
Ground conductor / equipotential bonding 16 mm^2		M8 ring cable lug at both ends

Cable lengths	7 m, 10 m, 15 m, 20 m, 25 m, 30 m, 35 m, 50 m
Max. cable length	50 m
Number of extensions	1

For detailed specifications of the connecting cables, see (>>> *7.4 "Description of the connecting cables, KR C4" Page 209*).

Connecting cables, KR C5

Cable designation	Connector designation robot controller - robot	Interface with robot
Motor cable	6 motor connectors: XD20.1 … XD20.6 - XD30 2 brake connectors: XD10.1, XD10.2 - XD30	Han® 16HP
Data cable	XF21 - XF31	Han® 3A Q12
Ground conductor / equipotential bonding 16 mm^2		M8 ring cable lug at both ends

Cable lengths	7 m, 10 m, 15 m, 20 m, 25 m, 30 m, 35 m, 50 m
Max. cable length	50 m
Number of extensions	1

For detailed specifications of the connecting cables, see (>>> *7.5 "Description of the connecting cables, KR C5" Page 213*).

4.3.2 Axis data, KR 120 R3500-2 P-C

Axis data

Motion range	
A1	±185 °
A2	-120 ° / 0 °

A3	-120 ° / 168 °
A4	±350 °
A5	±122.5 °
A6	±350 °
Speed with rated payload	
A1	112 °/s
A2	107 °/s
A3	114 °/s
A4	150 °/s
A5	129 °/s
A6	219 °/s

Direction of rotation of robot axes

The following diagram shows the direction of motion and the arrangement of the individual axes for the listed variants of this product family.

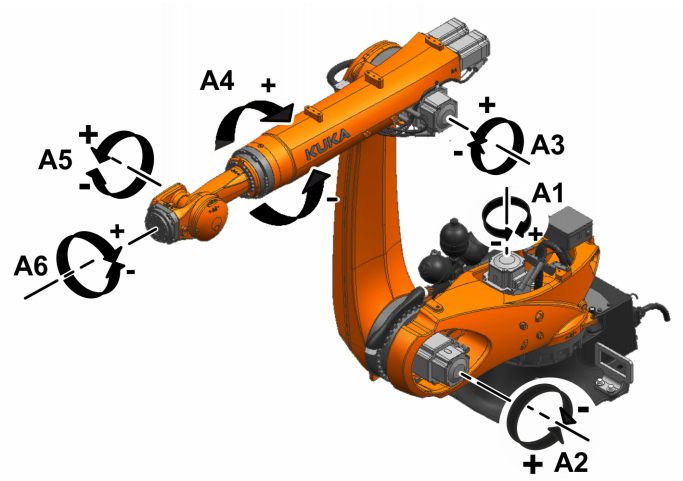

Fig. 4-11: Direction of rotation of the axes

Mastering positions

Mastering position	
A1	-25 °
A2	-100 °
A3	100 °
A4	0 °
A5	0 °
A6	0 °

Working envelope

The following diagrams show the shape and size of the working envelope for these variants of this product family.

The reference point for the working envelope is the intersection of axes 4 and 5.

Dimensions: mm

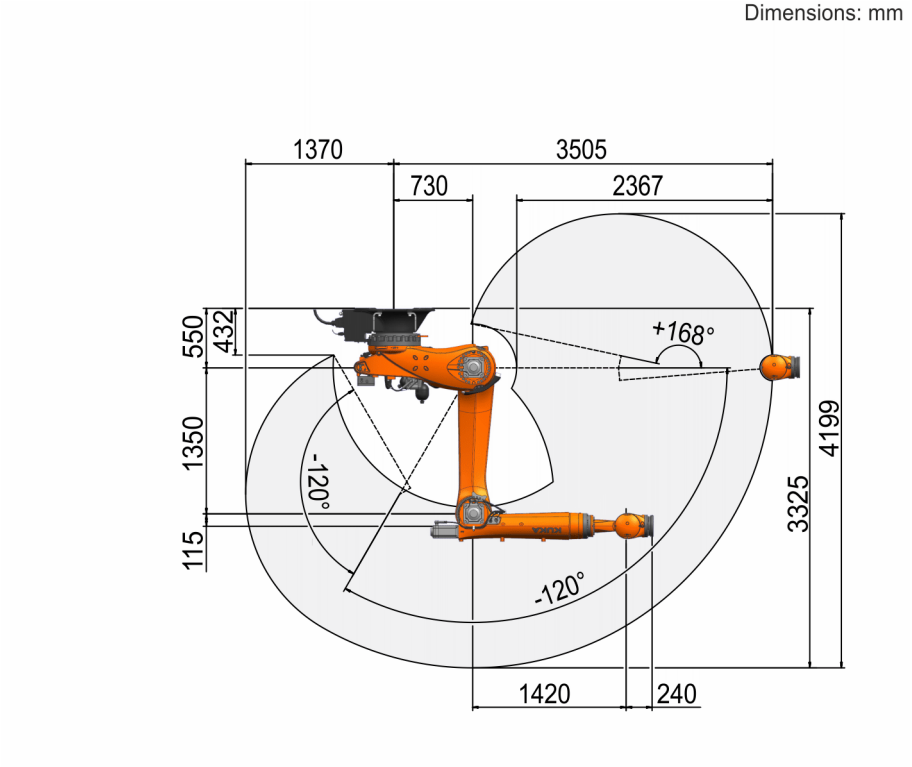

Fig. 4-12: KR 120 R3500-2 P-C, working envelope, side view

Dimensions: mm

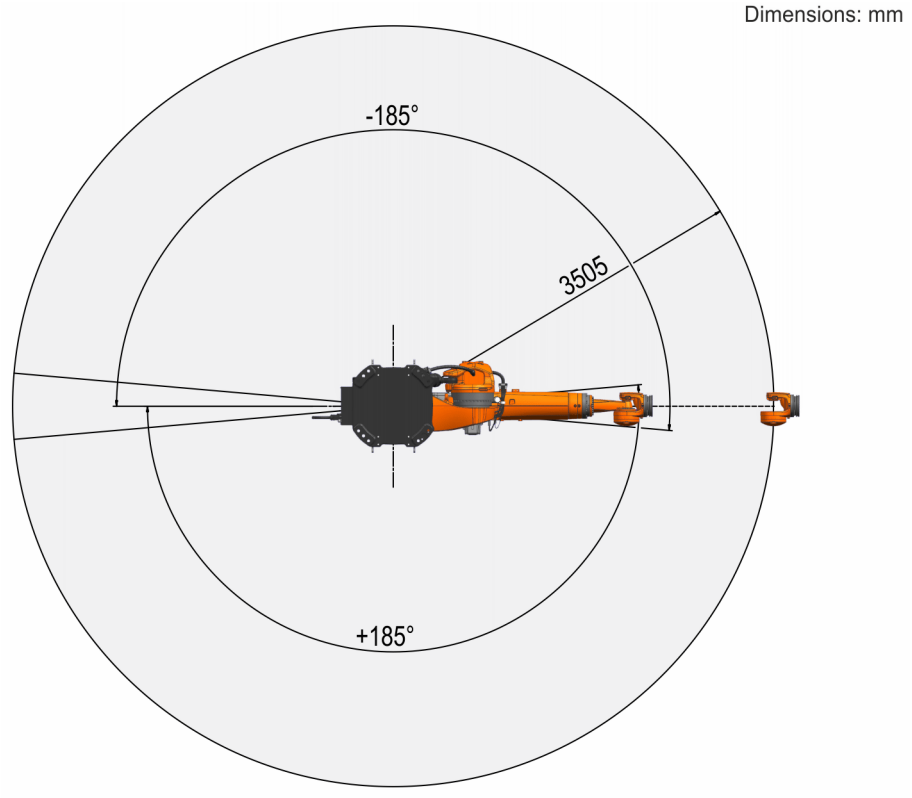

Fig. 4-13: KR 120 R3500-2 P-C, working envelope, top view

4.3.3 Payloads, KR 120 R3500-2 P-C

Payloads

Rated payload	120 kg
Maximum payload	180 kg
Rated supplementary load, base frame	0 kg
Maximum supplementary load, base frame	0 kg
Rated supplementary load, rotating column	0 kg
Maximum supplementary load, rotating column	300 kg
Rated supplementary load, link arm	0 kg
Maximum supplementary load, link arm	130 kg
Rated supplementary load, arm	50 kg
Maximum supplementary load, arm	150 kg

Load center of gravity and mass moment of inertia

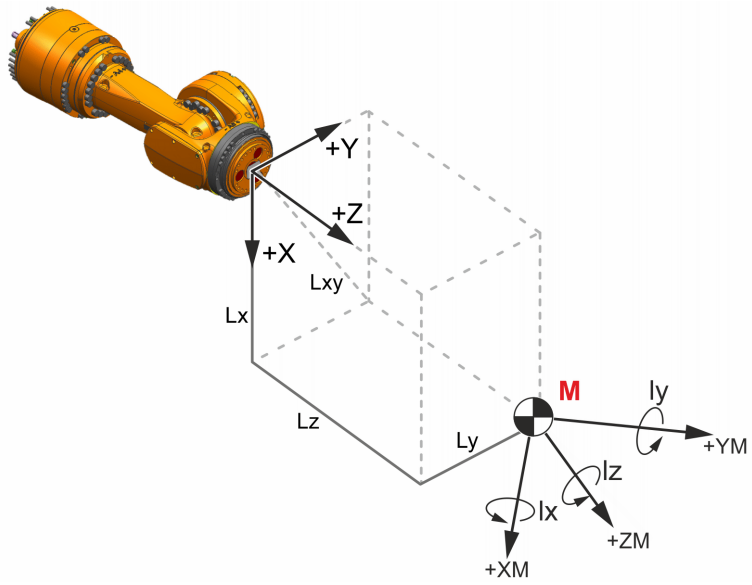

Fig. 4-14: Load center of gravity and mass moment of inertia

Parameter

Parameter/unit		Description
Mass	kg	Payload mass
L_x, L_y, L_z	mm	Position of the center of mass in the reference system

Parameter/unit		Description
A, **B**, **C**	Degrees	Orientation of the principal inertia axes • A: Rotation about the Z axis of the reference system The result is a coordinate system named CS'. • B: Rotation about the Y axis of CS' Result: CS'' • C: Rotation about the X axis of CS'' **Note:** A, B and C are not shown in the diagram.
Mass moments of inertia:		
$\mathbf{I_x}$	kgm^2	Inertia about the X axis of the main axis system
$\mathbf{I_y}$	kgm^2	Inertia about the Y axis of the main axis system
$\mathbf{I_z}$	kgm^2	Inertia about the Z axis of the main axis system

L_x, L_y, L_z and A, B, C unambiguously define the main axis system:

- The origin of the main axis system is the center of mass.
- A characteristic feature of the main axis system is that, among other things, the maximum possible inertia occurs about one of the 3 coordinate axes.

Further information is contained in the **KUKA Load** documentation.

Payload diagram

NOTICE

This loading curve corresponds to the maximum load capacity. Both values (payload and mass moment of inertia) must be checked in all cases. Exceeding this capacity will reduce the service life of the robot and overload the motors and the gears; in any such case KUKA Service must be consulted beforehand.
The values determined here are necessary for planning the robot application. For start-up of the robot, additional input data are required in accordance with the documentation for the system software.
The mass inertia must be verified using KUKA Load. It is imperative for the load data to be entered in the robot controller!

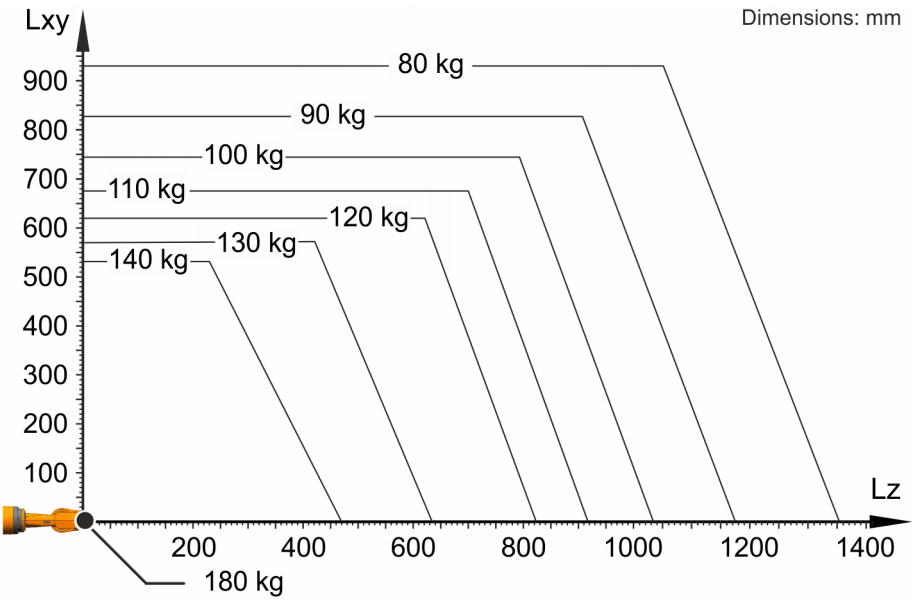

Fig. 4-15: Payload diagram, KR 120 R3500-2 P-C

The KR 120 R3500-2 P-C is designed for a rated payload of 120 kg in order to optimize the dynamic performance of the robot. With reduced load center distances and favorable supplementary loads, a maximum payload of up to 180 kg can be mounted. The specific KUKA Load case must be verified using KUKA. For further consultation, please contact KUKA Service.

Mounting flange

Robot wrist type	ZH300
Mounting flange standard	Deviation, see figure

Mounting flange (hole circle)	160 mm
Thread diameter	M10
Depth of engagement	min. 15 mm, max. 19 mm
Number of threads	11
Screw grade	10.9
Locating element	10 ^{H7}

The mounting flange is depicted with axes 4 and 6 in the zero position.

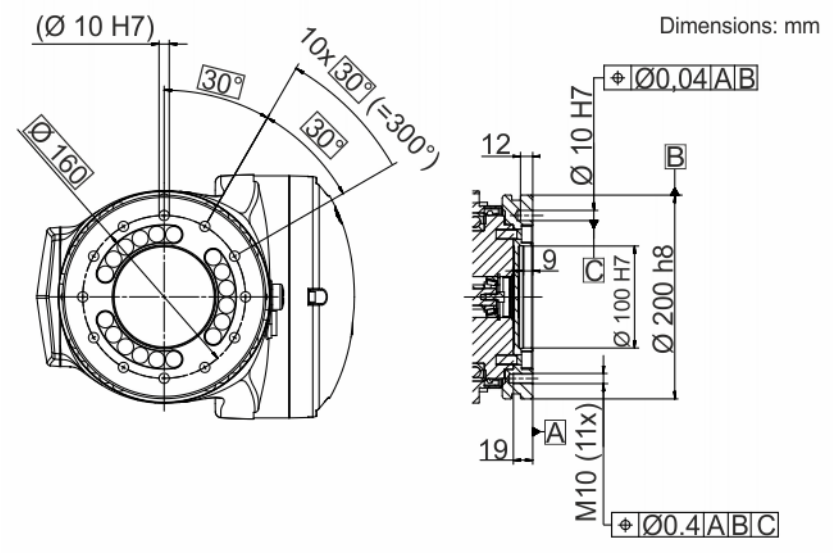

Fig. 4-16: Mounting flange D=160

Flange loads

The motion of the robot causes forces and torques to act on the mounting flange, which are transmitted to the mounted payload (e.g. tool).

The specified values refer to nominal payloads and do not include any safety factors. The actual forces and torques depend on the motion profile as well as the mass, load center of gravity and mass moment of inertia of the payload. It is imperative for the load data to be entered in the robot controller. The robot controller takes the payload into consideration during path planning.

The payload must be able to permanently withstand the forces and torques generated during normal operation.

The EMERGENCY STOP values only rarely occur during the service life of the robot (emergency situations). The frequency depends on the configuration of the system.

WARNING

Danger to life and limb due to insufficient stability of the tool
Incorrectly dimensioned tools can fracture and fail. Death, severe injuries or damage to property may result.

- Calculate the tool for each individual case, taking the load data into consideration.
- Use the specified installation equipment.

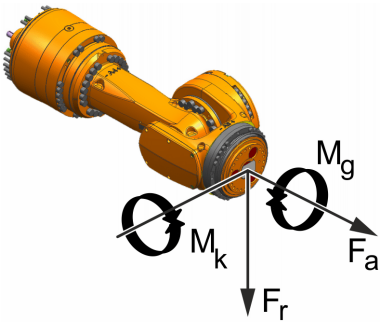

Fig. 4-17: Flange loads

Flange loads during operation	
F(a)	2550 N

F(r)	2550 N
M(k)	2900 Nm
M(g)	1600 Nm
Flange loads in the case of EMERGENCY STOP	
F(a)	4700 N
F(r)	6200 N
M(k)	7150 Nm
M(g)	5550 Nm

Axial force F(a), radial force F(r), tilting torque M(k), torque about mounting flange M(g)

Supplementary load

The robot can carry supplementary loads. When mounting the supplementary loads, be careful to observe the maximum permissible total load. The dimensions and positions of the installation options can be seen in the following diagrams.

Dimensions: mm

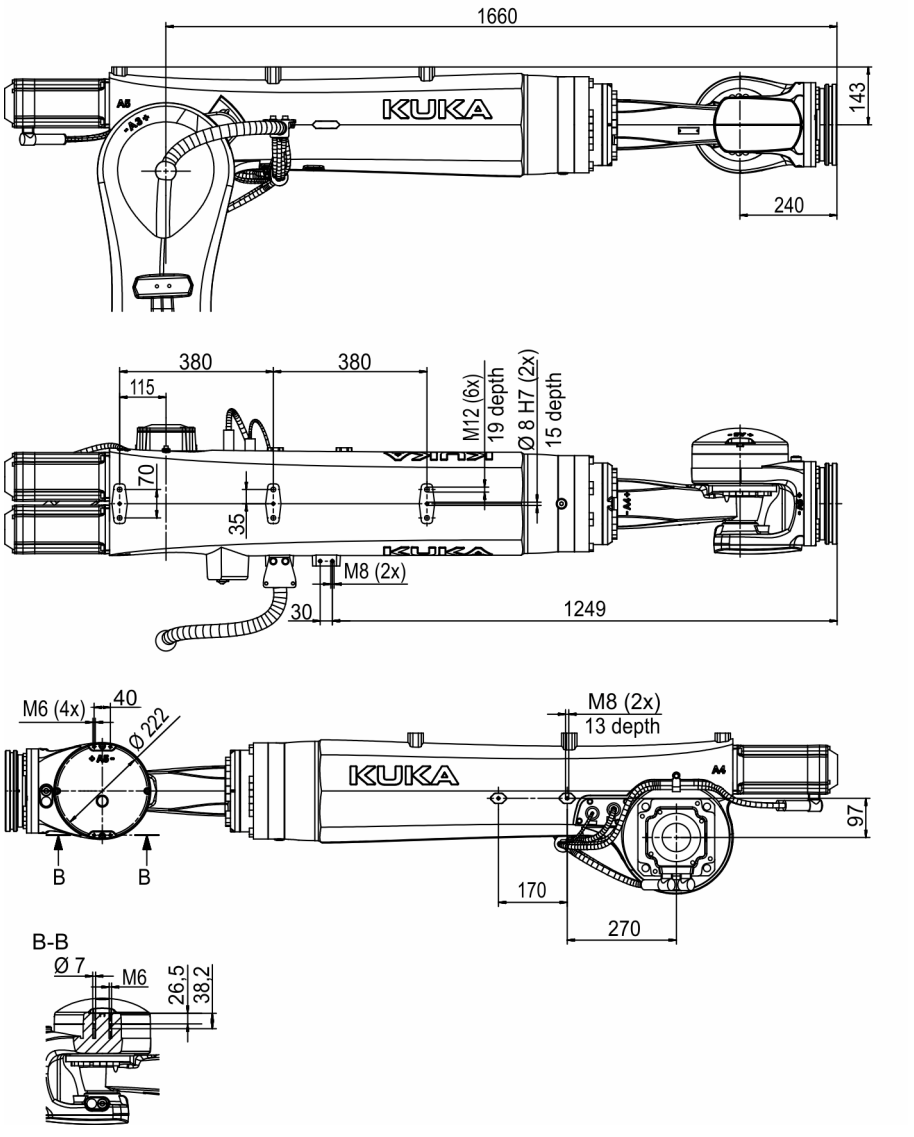

Fig. 4-18: Fastening of supplementary load on arm/in-line wrist, KR 120 R3500-2 P-C

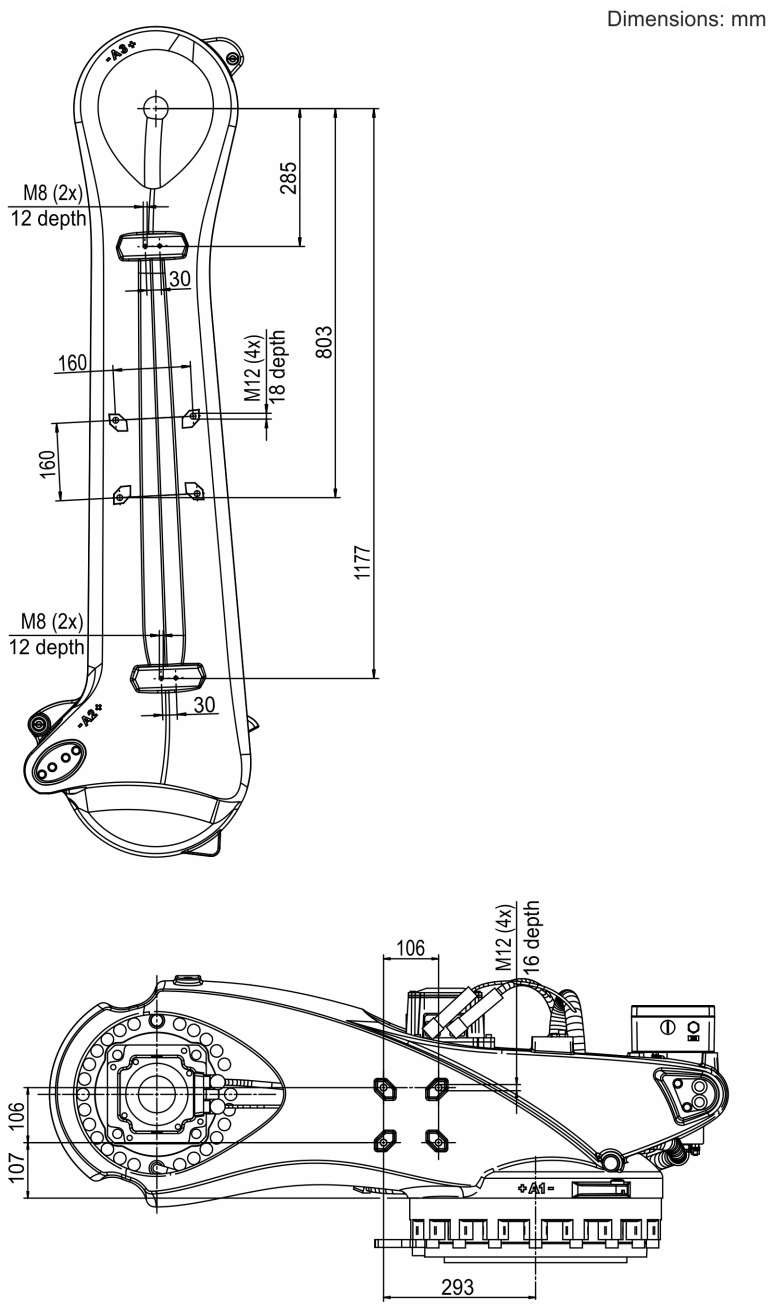

Fig. 4-19: Fastening of supplementary load on rotating column/link arm, KR 120 R3500-2 P-C

4.3.4 Foundation loads, KR 120 R3500-2 P-C

Depending on the payload (e.g. tool), supplementary load and the robot's own mass (weight), the motion of the robot generates forces and torques which are transmitted to the foundation.

The specified values refer to nominal payloads and do not include any safety factors. The actual forces and torques depend on the motion profile as well as the mass, load center of gravity and mass moment of inertia of the payload. It is imperative for the load data to be entered in the robot controller. The robot controller takes the payload into consideration during path planning.

Supplementary loads on A1 (rotating column) and A2 (link arm) are not taken into consideration in the calculation of the foundation load. These must be taken into account in the vertical force (F_v).

The foundation must be able to permanently withstand the forces and torques generated during normal operation.

The EMERGENCY STOP values only rarely occur during the service life of the robot (emergency situations). The frequency depends on the configuration of the system.

WARNING

Danger to life and limb due to insufficient stability of the foundation

An incorrectly dimensioned foundation can fracture and fail. Death, severe injuries or damage to property may result.

- Calculate the foundation loads for each individual case.
- Use the specified installation equipment.

Vertical force F(v)	
F(v normal)	18750 N
F(v max)	22250 N
Horizontal force F(h)	
F(h normal)	6750 N
F(h max)	18750 N
Tilting moment M(k)	
M(k normal)	26250 Nm
M(k max)	46000 Nm
Torque about axis 1 M(r)	
M(r normal)	11500 Nm
M(r max)	23000 Nm

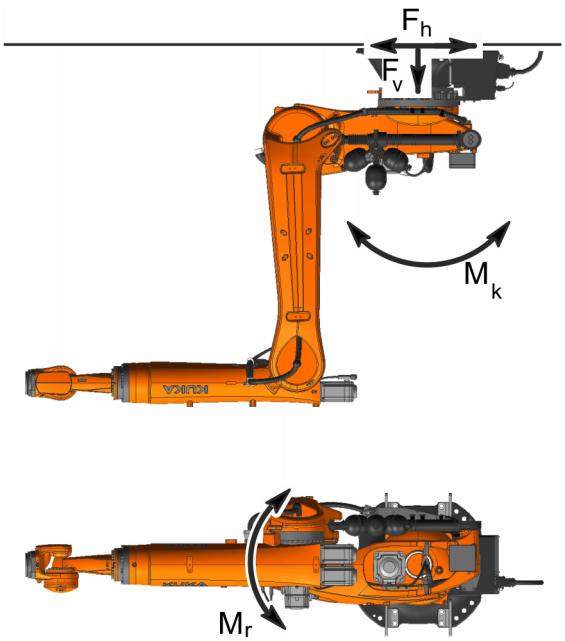

Fig. 4-20: Foundation loads

4.4 Technical data, KR 120 R3900-2 K

4.4.1 Basic data, KR 120 R3900-2 K

Basic data

	KR 120 R3900-2 K
Number of axes	6
Number of controlled axes	6
Volume of working envelope	211.3 m³
Pose repeatability (ISO 9283)	± 0.05 mm
Weight	approx. 1280 kg
Rated payload	120 kg
Maximum payload	146 kg
Maximum reach	3904 mm
Protection rating (IEC 60529)	IP65
Protection rating, robot wrist (IEC 60529)	IP65 / IP67
Sound level	< 75 dB (A)
Mounting position	Floor
Footprint	754 mm x 754 mm
Hole pattern: mounting surface for kinematic system	S780
Permissible angle of inclination	± 0 °
Default color	Base frame: black (RAL 9005); Moving parts: KUKA Industrial Orange (RAL 2009)
Controller	KR C5 M6/M7; KR C4
Transformation name	KR C4: KR120R3900K_2 FLR; KR C5: KR120R3900K_2 FLR

The manipulator is designed in such a way that, in accordance with standard IEC 60529, no water can penetrate into electrical equipment spaces in normal operation. Water spray and corrosive additives can nevertheless lead to corrosion (rust) on uncoated parts. In this case, it is advisable to provide the equipment with corrosion protection. Corrosion does not represent a defect as defined by the standard, as long as it does not have a detrimental effect on the protection rating. The protection rating is valid in the case of compliance with the specified ambient conditions.

Ambient conditions

Humidity class (EN 60204)	-
Classification of environmental conditions (EN 60721-3-3)	-
Cleanroom class (ISO 14644-1)	-
Ambient temperature	
During operation	0 °C to 55 °C (273 K to 328 K)

During storage/transportation	-40 °C to 60 °C (233 K to 333 K)

For operation at low temperatures, it may be necessary to warm up the robot.

During operation in the low-temperature range, frost and condensation must be avoided, as damage to property may otherwise arise.

Connecting cables, KR C4

Cable designation	Connector designation robot controller - robot	Interface with robot
Motor cable	X20 - X30	Han® 16HP
Data cable	X21 - X31	Han® 3A Q12
Ground conductor / equipotential bonding 16 mm^2		M8 ring cable lug at both ends

Cable lengths	7 m, 10 m, 15 m, 20 m, 25 m, 30 m, 35 m, 50 m
Max. cable length	50 m
Number of extensions	1

For detailed specifications of the connecting cables, see (>>> *7.4 "Description of the connecting cables, KR C4" Page 209*).

Connecting cables, KR C5

Cable designation	Connector designation robot controller - robot	Interface with robot
Motor cable	6 motor connectors: XD20.1 … XD20.6 - XD30 2 brake connectors: XD10.1, XD10.2 - XD30	Han® 16HP
Data cable	XF21 - XF31	Han® 3A Q12
Ground conductor / equipotential bonding 16 mm^2		M8 ring cable lug at both ends

Cable lengths	7 m, 10 m, 15 m, 20 m, 25 m, 30 m, 35 m, 50 m
Max. cable length	50 m
Number of extensions	1

For detailed specifications of the connecting cables, see (>>> *7.5 "Description of the connecting cables, KR C5" Page 213*).

4.4.2 Axis data, KR 120 R3900-2 K

Axis data

Motion range	
A1	±185 °
A2	-120 ° / 70 °

A3	-120 ° / 168 °
A4	±350 °
A5	±125 °
A6	±350 °
Speed with rated payload	
A1	105 °/s
A2	101 °/s
A3	110 °/s
A4	190 °/s
A5	180 °/s
A6	260 °/s

Direction of rotation of robot axes

The following diagram shows the direction of motion and the arrangement of the individual axes for the listed variants of this product family.

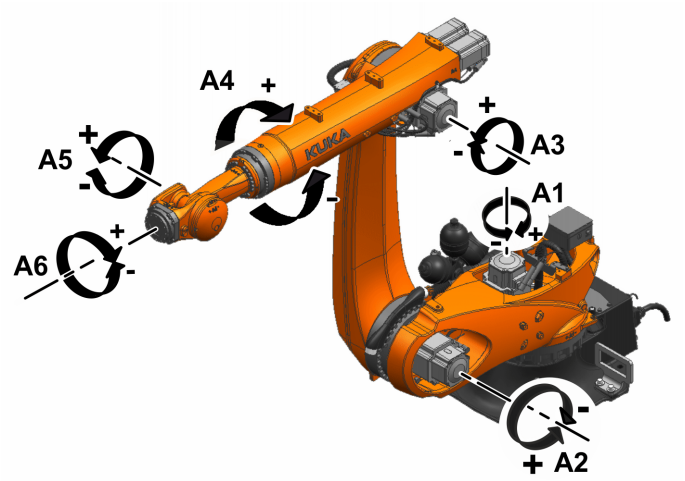

Fig. 4-21: Direction of rotation of the axes

Mastering positions

Mastering position	
A1	-25 °
A2	-100 °
A3	100 °
A4	0 °
A5	0 °
A6	0 °

Working envelope

The following diagrams show the shape and size of the working envelope for these variants of this product family.

The reference point for the working envelope is the intersection of axes 4 and 5.

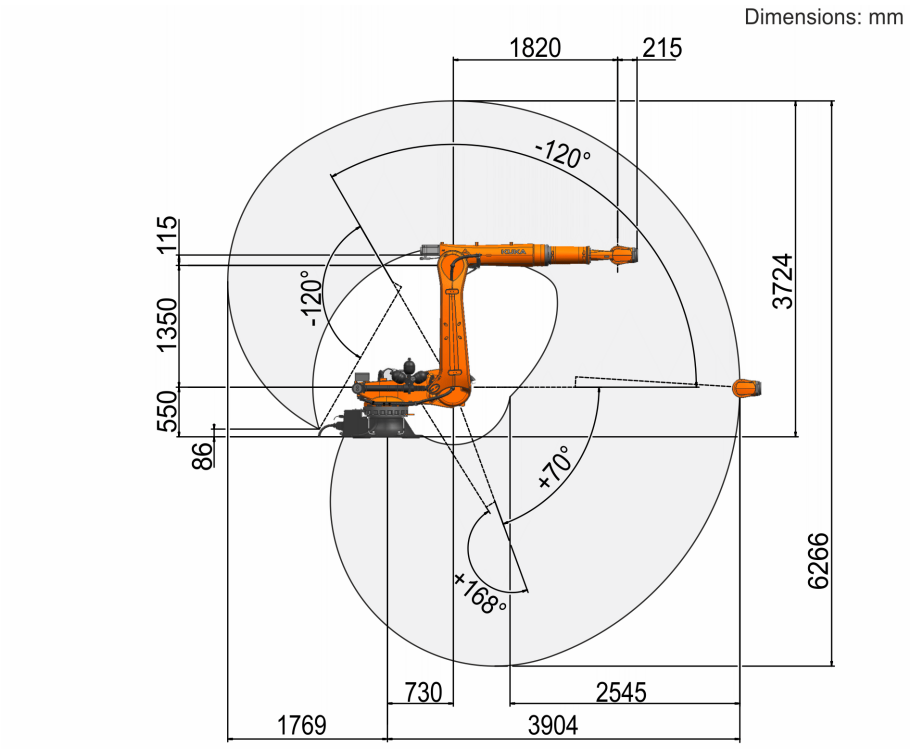

Fig. 4-22: KR 120 R3900-2 K, working envelope, side view

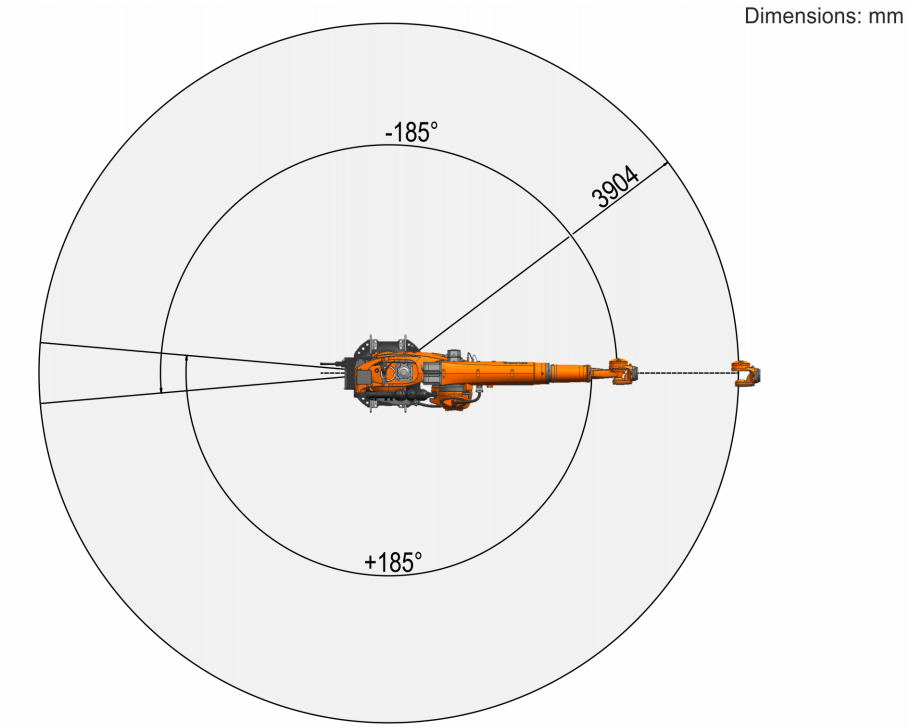

Fig. 4-23: KR 120 R3900-2 K, working envelope, top view

4.4.3 Payloads, KR 120 R3900-2 K

Payloads

Rated payload	120 kg
Maximum payload	146 kg
Rated supplementary load, base frame	0 kg
Maximum supplementary load, base frame	0 kg
Rated supplementary load, rotating column	0 kg
Maximum supplementary load, rotating column	300 kg
Rated supplementary load, link arm	0 kg
Maximum supplementary load, link arm	130 kg
Rated supplementary load, arm	50 kg
Maximum supplementary load, arm	150 kg

Load center of gravity and mass moment of inertia

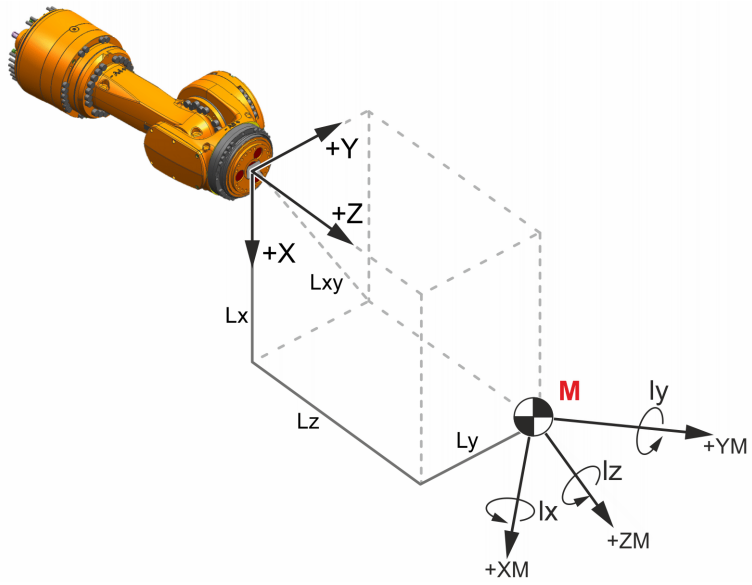

Fig. 4-24: Load center of gravity and mass moment of inertia

Parameter

Parameter/unit		Description
Mass	kg	Payload mass
L_x, L_y, L_z	mm	Position of the center of mass in the reference system

Parameter/unit		Description
A, **B**, **C**	Degrees	Orientation of the principal inertia axes • A: Rotation about the Z axis of the reference system The result is a coordinate system named CS'. • B: Rotation about the Y axis of CS' Result: CS'' • C: Rotation about the X axis of CS'' **Note:** A, B and C are not shown in the diagram.
Mass moments of inertia:		
$\mathbf{I_x}$	kgm^2	Inertia about the X axis of the main axis system
$\mathbf{I_y}$	kgm^2	Inertia about the Y axis of the main axis system
$\mathbf{I_z}$	kgm^2	Inertia about the Z axis of the main axis system

L_x, L_y, L_z and A, B, C unambiguously define the main axis system:

- The origin of the main axis system is the center of mass.
- A characteristic feature of the main axis system is that, among other things, the maximum possible inertia occurs about one of the 3 coordinate axes.

Further information is contained in the **KUKA Load** documentation.

Payload diagram

NOTICE

This loading curve corresponds to the maximum load capacity. Both values (payload and mass moment of inertia) must be checked in all cases. Exceeding this capacity will reduce the service life of the robot and overload the motors and the gears; in any such case KUKA Service must be consulted beforehand.
The values determined here are necessary for planning the robot application. For start-up of the robot, additional input data are required in accordance with the documentation for the system software.
The mass inertia must be verified using KUKA Load. It is imperative for the load data to be entered in the robot controller!

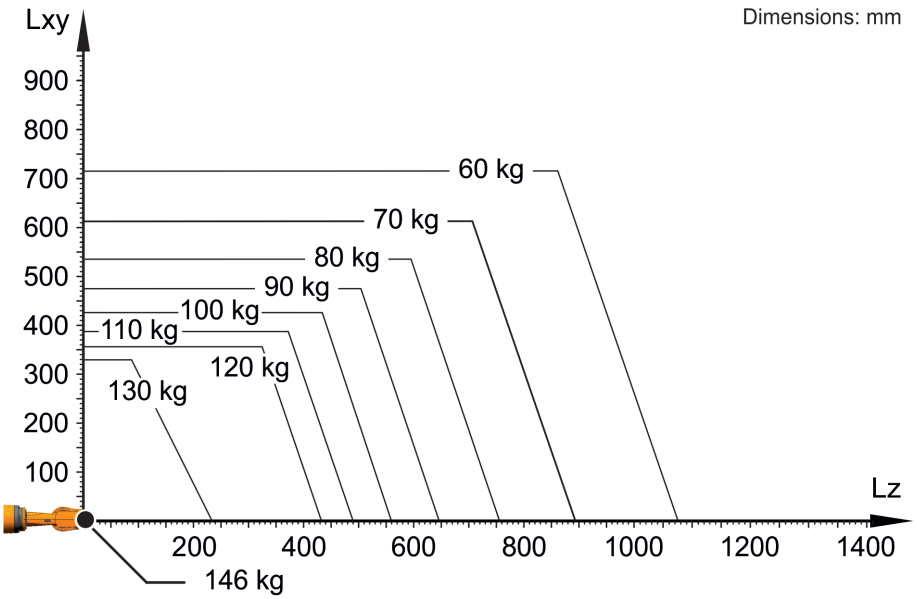

Fig. 4-25: Payload diagram, KR 120 R3900-2 K

The KR 120 R3900-2 K is designed for a rated payload of 120 kg in order to optimize the dynamic performance of the robot. With reduced load center distances and favorable supplementary loads, a maximum payload of up to 146 kg can be mounted. The specific KUKA Load case must be verified using KUKA. For further consultation, please contact KUKA Service.

Mounting flange

Robot wrist type	ZH120 HV400
Mounting flange standard	Deviation, see figure

Diameter (hole circle)	125 mm
Thread diameter	M10
Depth of engagement	min. 11.5 mm, max. 16 mm
Number of threads	11
Screw grade	10.9
Locating element	10 ^{H7}

The mounting flange is depicted with axes 4 and 6 in the zero position.

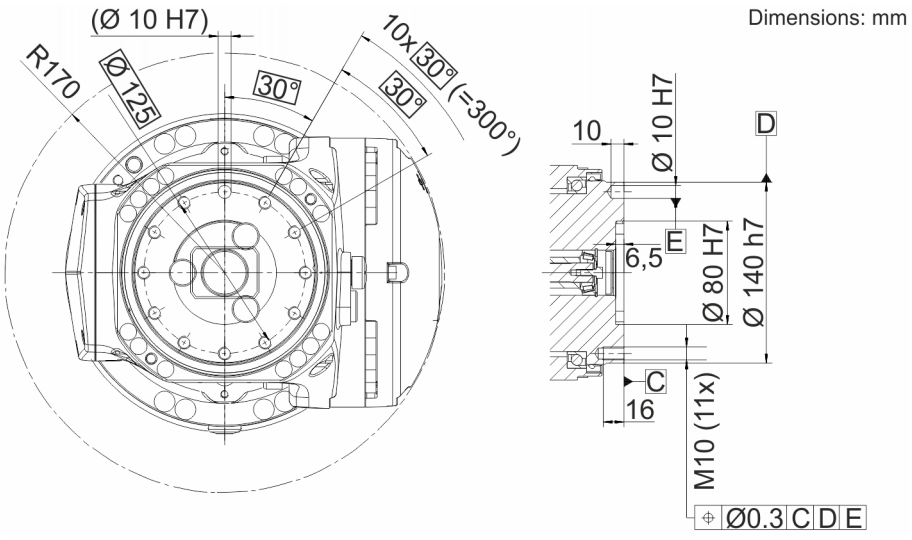

Fig. 4-26: Mounting flange D=125

Flange loads

The motion of the robot causes forces and torques to act on the mounting flange, which are transmitted to the mounted payload (e.g. tool).

The specified values refer to nominal payloads and do not include any safety factors. The actual forces and torques depend on the motion profile as well as the mass, load center of gravity and mass moment of inertia of the payload. It is imperative for the load data to be entered in the robot controller. The robot controller takes the payload into consideration during path planning.

The payload must be able to permanently withstand the forces and torques generated during normal operation.

The EMERGENCY STOP values only rarely occur during the service life of the robot (emergency situations). The frequency depends on the configuration of the system.

WARNING

Danger to life and limb due to insufficient stability of the tool
Incorrectly dimensioned tools can fracture and fail. Death, severe injuries or damage to property may result.

- Calculate the tool for each individual case, taking the load data into consideration.
- Use the specified installation equipment.

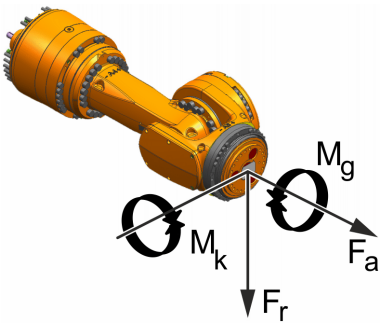

Fig. 4-27: Flange loads

Flange loads during operation	
F(a)	3900 N

F(r)	3300 N
M(k)	2200 Nm
M(g)	1000 Nm
Flange loads in the case of EMERGENCY STOP	
F(a)	5400 N
F(r)	8300 N
M(k)	5300 Nm
M(g)	4300 Nm

Axial force F(a), radial force F(r), tilting torque M(k), torque about mounting flange M(g)

Supplementary load

The robot can carry supplementary loads. When mounting the supplementary loads, be careful to observe the maximum permissible total load. The dimensions and positions of the installation options can be seen in the following diagrams.

Dimensions: mm

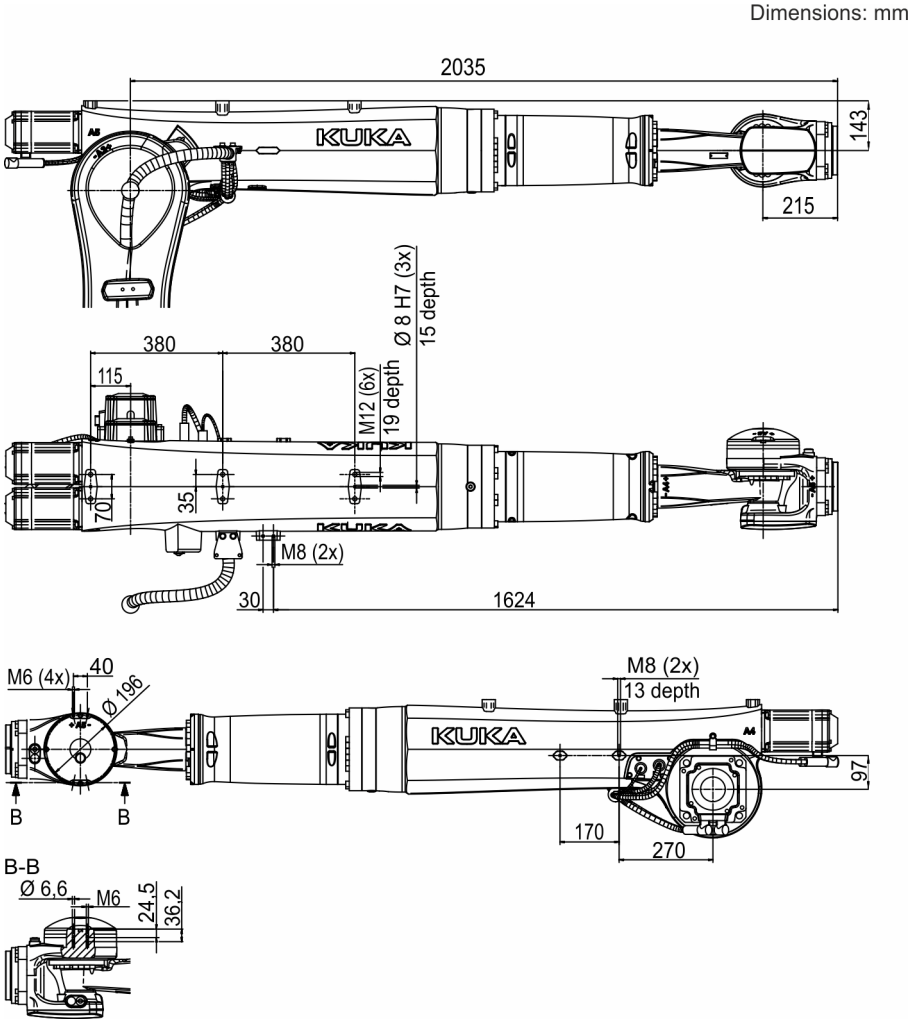

Fig. 4-28: Fastening of supplementary load on arm/in-line wrist, KR 120 R3900-2 K

Dimensions: mm

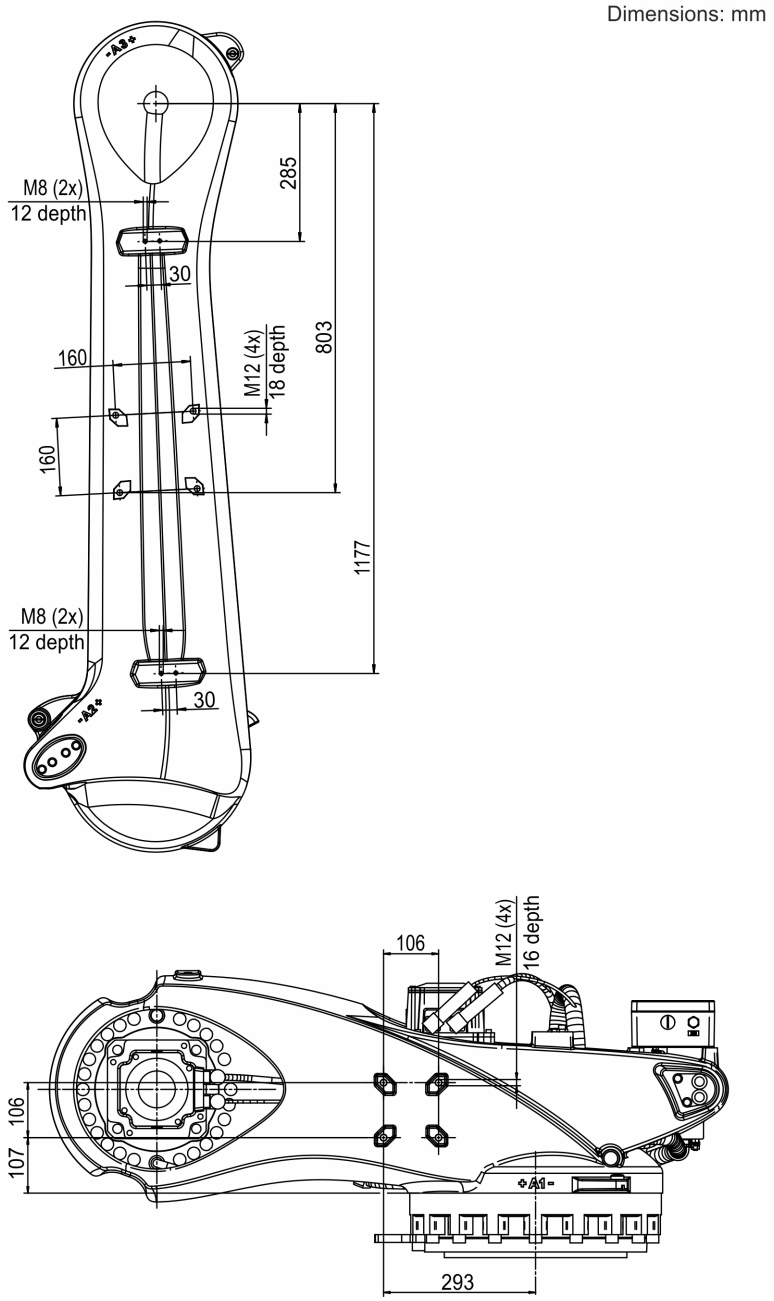

Fig. 4-29: Fastening of supplementary load on rotating column/link arm, KR 120 R3900-2 K

4.4.4 Foundation loads, KR 120 R3900-2 K

Depending on the payload (e.g. tool), supplementary load and the robot's own mass (weight), the motion of the robot generates forces and torques which are transmitted to the foundation.

The specified values refer to nominal payloads and do not include any safety factors. The actual forces and torques depend on the motion profile as well as the mass, load center of gravity and mass moment of inertia of the payload. It is imperative for the load data to be entered in the robot controller. The robot controller takes the payload into consideration during path planning.

Supplementary loads on A1 (rotating column) and A2 (link arm) are not taken into consideration in the calculation of the foundation load. These must be taken into account in the vertical force (F_v).

The foundation must be able to permanently withstand the forces and torques generated during normal operation.

The EMERGENCY STOP values only rarely occur during the service life of the robot (emergency situations). The frequency depends on the configuration of the system.

WARNING

Danger to life and limb due to insufficient stability of the foundation

An incorrectly dimensioned foundation can fracture and fail. Death, severe injuries or damage to property may result.

- Calculate the foundation loads for each individual case.
- Use the specified installation equipment.

Vertical force F(v)	
F(v normal)	21100 N
F(v max)	25700 N
Horizontal force F(h)	
F(h normal)	8200 N
F(h max)	19900 N
Tilting moment M(k)	
M(k normal)	28000 Nm
M(k max)	44300 Nm
Torque about axis 1 M(r)	
M(r normal)	11300 Nm
M(r max)	18600 Nm

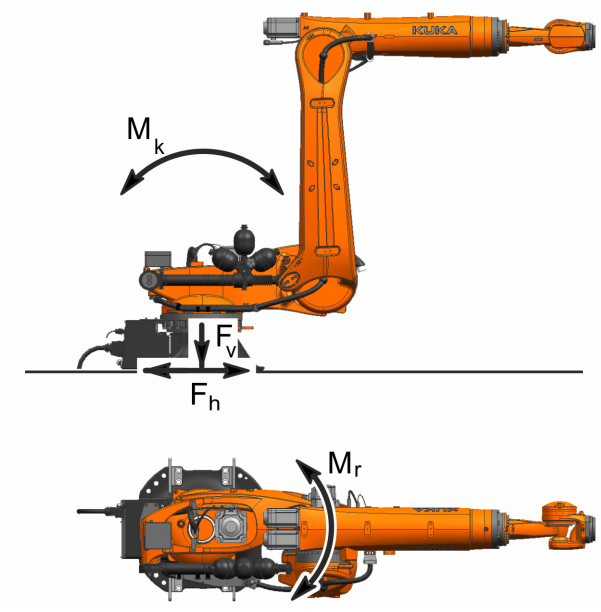

Fig. 4-30: Foundation loads

4.5 Technical data, KR 180 R3500-2 K

4.5.1 Basic data, KR 180 R3500-2 K

Basic data

	KR 180 R3500-2 K
Number of axes	6
Number of controlled axes	6
Volume of working envelope	150.5 m³
Pose repeatability (ISO 9283)	± 0.05 mm
Weight	approx. 1256 kg
Rated payload	180 kg
Maximum payload	228 kg
Maximum reach	3505 mm
Protection rating (IEC 60529)	IP65
Protection rating, robot wrist (IEC 60529)	IP65 / IP67
Sound level	< 75 dB (A)
Mounting position	Floor
Footprint	754 mm x 754 mm
Hole pattern: mounting surface for kinematic system	S780
Permissible angle of inclination	± 0 °
Default color	Base frame: black (RAL 9005); Moving parts: KUKA Industrial Orange (RAL 2009)
Controller	KR C5 M6/M7; KR C4
Transformation name	KR C4: KR180R3500K_2 FLR; KR C5: KR180R3500K_2 FLR

The manipulator is designed in such a way that, in accordance with standard IEC 60529, no water can penetrate into electrical equipment spaces in normal operation. Water spray and corrosive additives can nevertheless lead to corrosion (rust) on uncoated parts. In this case, it is advisable to provide the equipment with corrosion protection. Corrosion does not represent a defect as defined by the standard, as long as it does not have a detrimental effect on the protection rating. The protection rating is valid in the case of compliance with the specified ambient conditions.

Ambient conditions

Humidity class (EN 60204)	-
Classification of environmental conditions (EN 60721-3-3)	-
Cleanroom class (ISO 14644-1)	-
Ambient temperature	
During operation	0 °C to 55 °C (273 K to 328 K)

During storage/transportation	-40 °C to 60 °C (233 K to 333 K)

For operation at low temperatures, it may be necessary to warm up the robot.

During operation in the low-temperature range, frost and condensation must be avoided, as damage to property may otherwise arise.

Connecting cables, KR C4

Cable designation	Connector designation robot controller - robot	Interface with robot
Motor cable	X20 - X30	Han® 16HP
Data cable	X21 - X31	Han® 3A Q12
Ground conductor / equipotential bonding 16 mm^2		M8 ring cable lug at both ends

Cable lengths	7 m, 10 m, 15 m, 20 m, 25 m, 30 m, 35 m, 50 m
Max. cable length	50 m
Number of extensions	1

For detailed specifications of the connecting cables, see (>>> *7.4 "Description of the connecting cables, KR C4" Page 209*).

Connecting cables, KR C5

Cable designation	Connector designation robot controller - robot	Interface with robot
Motor cable	6 motor connectors: XD20.1 … XD20.6 - XD30 2 brake connectors: XD10.1, XD10.2 - XD30	Han® 16HP
Data cable	XF21 - XF31	Han® 3A Q12
Ground conductor / equipotential bonding 16 mm^2		M8 ring cable lug at both ends

Cable lengths	7 m, 10 m, 15 m, 20 m, 25 m, 30 m, 35 m, 50 m
Max. cable length	50 m
Number of extensions	1

For detailed specifications of the connecting cables, see (>>> *7.5 "Description of the connecting cables, KR C5" Page 213*).

4.5.2 Axis data, KR 180 R3500-2 K

Axis data

Motion range	
A1	±185 °
A2	-120 ° / 70 °

A3	-120 ° / 168 °
A4	±350 °
A5	±125 °
A6	±350 °
Speed with rated payload	
A1	105 °/s
A2	101 °/s
A3	110 °/s
A4	150 °/s
A5	180 °/s
A6	260 °/s

Direction of rotation of robot axes

The following diagram shows the direction of motion and the arrangement of the individual axes for the listed variants of this product family.

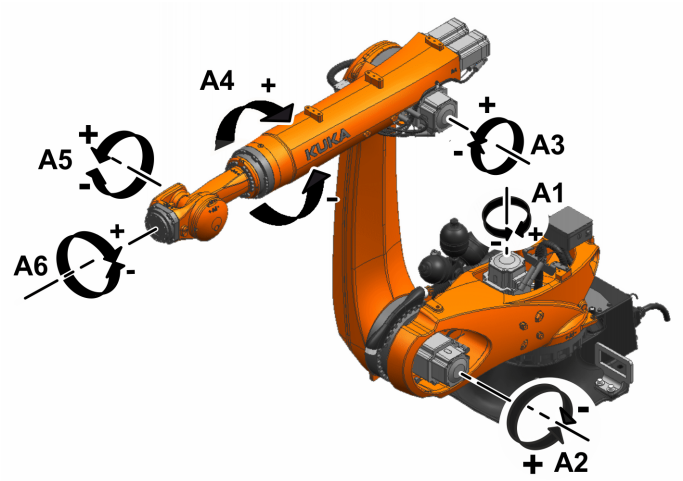

Fig. 4-31: Direction of rotation of the axes

Mastering positions

Mastering position	
A1	-25 °
A2	-100 °
A3	100 °
A4	0 °
A5	0 °
A6	0 °

Working envelope

The following diagrams show the shape and size of the working envelope for these variants of this product family.

The reference point for the working envelope is the intersection of axes 4 and 5.

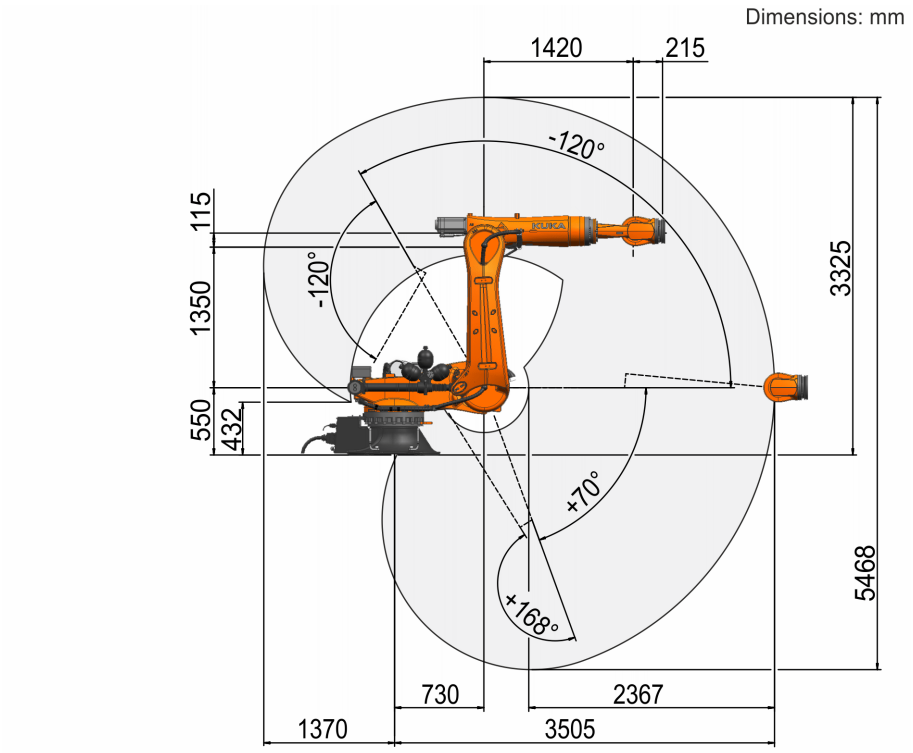

Fig. 4-32: KR 180 R3500-2 K, working envelope, side view

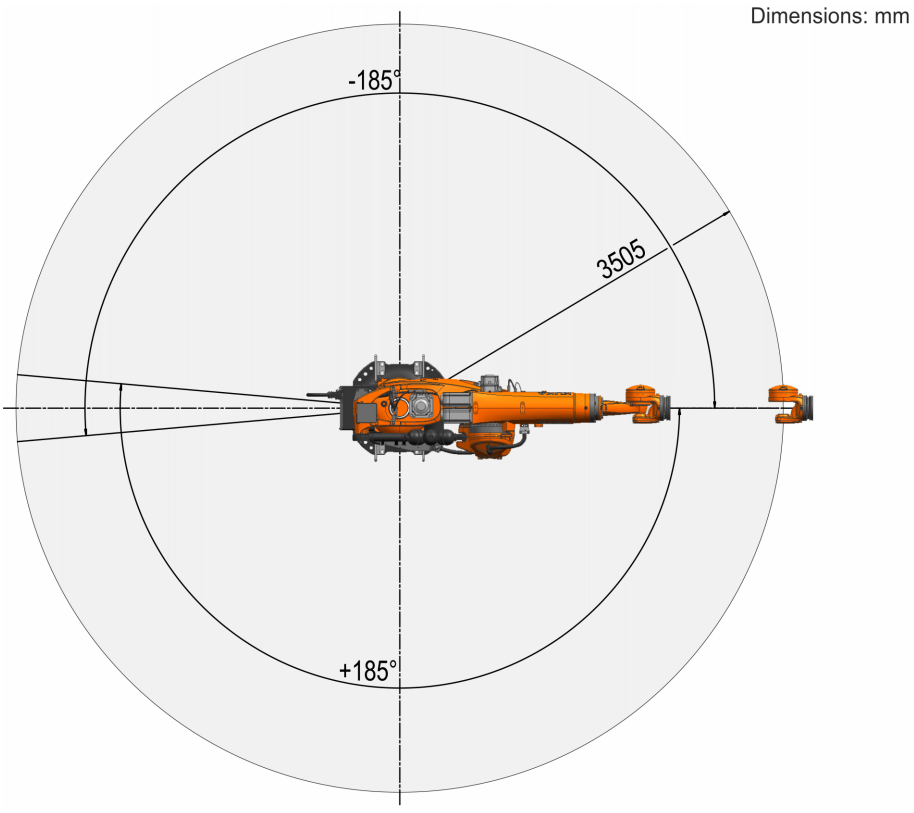

Fig. 4-33: KR 180 R3500-2 K, working envelope, top view

4.5.3 Payloads, KR 180 R3500-2 K

Payloads

Rated payload	180 kg
Maximum payload	228 kg
Rated supplementary load, base frame	0 kg
Maximum supplementary load, base frame	0 kg
Rated supplementary load, rotating column	0 kg
Maximum supplementary load, rotating column	300 kg
Rated supplementary load, link arm	0 kg
Maximum supplementary load, link arm	130 kg
Rated supplementary load, arm	50 kg
Maximum supplementary load, arm	150 kg

Load center of gravity and mass moment of inertia

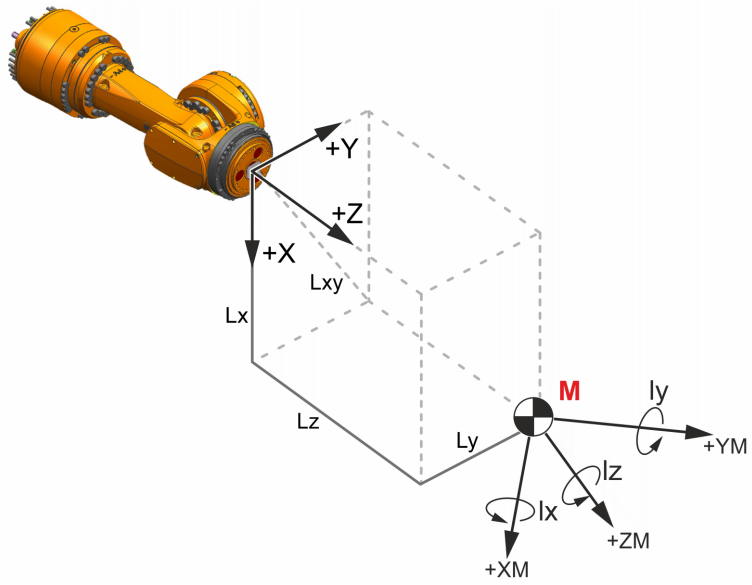

Fig. 4-34: Load center of gravity and mass moment of inertia

Parameter

Parameter/unit		Description
Mass	kg	Payload mass
L_x, L_y, L_z	mm	Position of the center of mass in the reference system

Parameter/unit		Description
A, **B**, **C**	Degrees	Orientation of the principal inertia axes • A: Rotation about the Z axis of the reference system The result is a coordinate system named CS'. • B: Rotation about the Y axis of CS' Result: CS'' • C: Rotation about the X axis of CS'' **Note:** A, B and C are not shown in the diagram.
Mass moments of inertia:		
$\mathbf{I_x}$	kgm^2	Inertia about the X axis of the main axis system
$\mathbf{I_y}$	kgm^2	Inertia about the Y axis of the main axis system
$\mathbf{I_z}$	kgm^2	Inertia about the Z axis of the main axis system

L_x, L_y, L_z and A, B, C unambiguously define the main axis system:

- The origin of the main axis system is the center of mass.
- A characteristic feature of the main axis system is that, among other things, the maximum possible inertia occurs about one of the 3 coordinate axes.

Further information is contained in the **KUKA Load** documentation.

Payload diagram

NOTICE

This loading curve corresponds to the maximum load capacity. Both values (payload and mass moment of inertia) must be checked in all cases. Exceeding this capacity will reduce the service life of the robot and overload the motors and the gears; in any such case KUKA Service must be consulted beforehand.
The values determined here are necessary for planning the robot application. For start-up of the robot, additional input data are required in accordance with the documentation for the system software.
The mass inertia must be verified using KUKA Load. It is imperative for the load data to be entered in the robot controller!

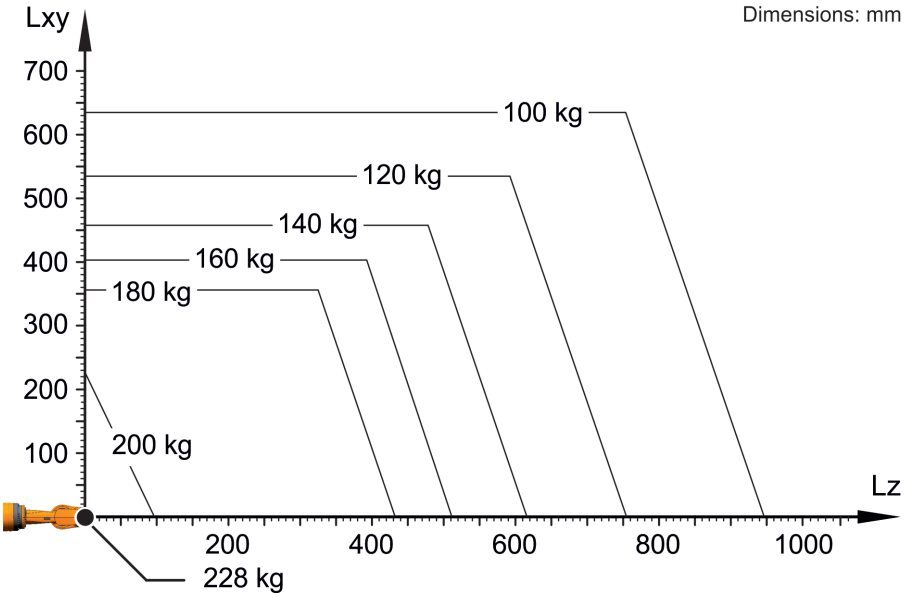

Fig. 4-35: Payload diagram, KR 180 R3500-2 K

The KR 180 R3500-2 K is designed for a rated payload of 180 kg in order to optimize the dynamic performance of the robot. With reduced load center distances and favorable supplementary loads, a maximum payload of up to 228 kg can be mounted. The specific KUKA Load case must be verified using KUKA. For further consultation, please contact KUKA Service.

Mounting flange

Robot wrist type	ZH210
Mounting flange standard	Deviation, see figure

Diameter (hole circle)	125 mm
Thread diameter	M10
Depth of engagement	min. 11.5 mm, max. 16 mm
Number of threads	11
Screw grade	10.9
Locating element	10 ^{H7}

The mounting flange is depicted with axes 4 and 6 in the zero position.

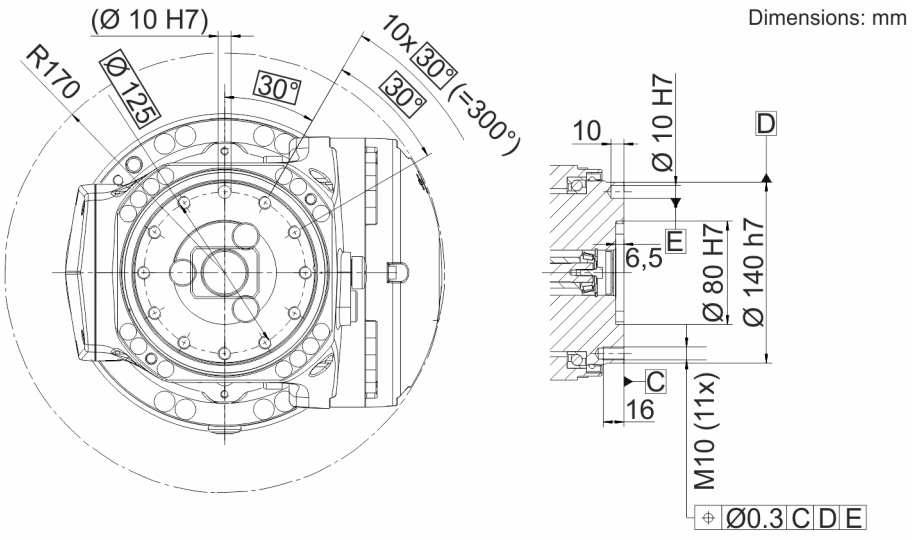

Fig. 4-36: Mounting flange D=125

Flange loads

The motion of the robot causes forces and torques to act on the mounting flange, which are transmitted to the mounted payload (e.g. tool).

The specified values refer to nominal payloads and do not include any safety factors. The actual forces and torques depend on the motion profile as well as the mass, load center of gravity and mass moment of inertia of the payload. It is imperative for the load data to be entered in the robot controller. The robot controller takes the payload into consideration during path planning.

The payload must be able to permanently withstand the forces and torques generated during normal operation.

The EMERGENCY STOP values only rarely occur during the service life of the robot (emergency situations). The frequency depends on the configuration of the system.

WARNING

Danger to life and limb due to insufficient stability of the tool
Incorrectly dimensioned tools can fracture and fail. Death, severe injuries or damage to property may result.

- Calculate the tool for each individual case, taking the load data into consideration.
- Use the specified installation equipment.

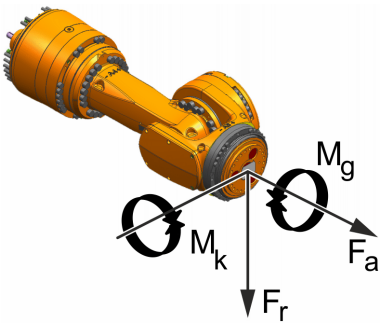

Fig. 4-37: Flange loads

Flange loads during operation	
F(a)	3900 N

F(r)	3300 N
M(k)	2200 Nm
M(g)	1000 Nm
Flange loads in the case of EMERGENCY STOP	
F(a)	5400 N
F(r)	8300 N
M(k)	5300 Nm
M(g)	4300 Nm

Axial force F(a), radial force F(r), tilting torque M(k), torque about mounting flange M(g)

Supplementary load

The robot can carry supplementary loads. When mounting the supplementary loads, be careful to observe the maximum permissible total load. The dimensions and positions of the installation options can be seen in the following diagrams.

Dimensions: mm

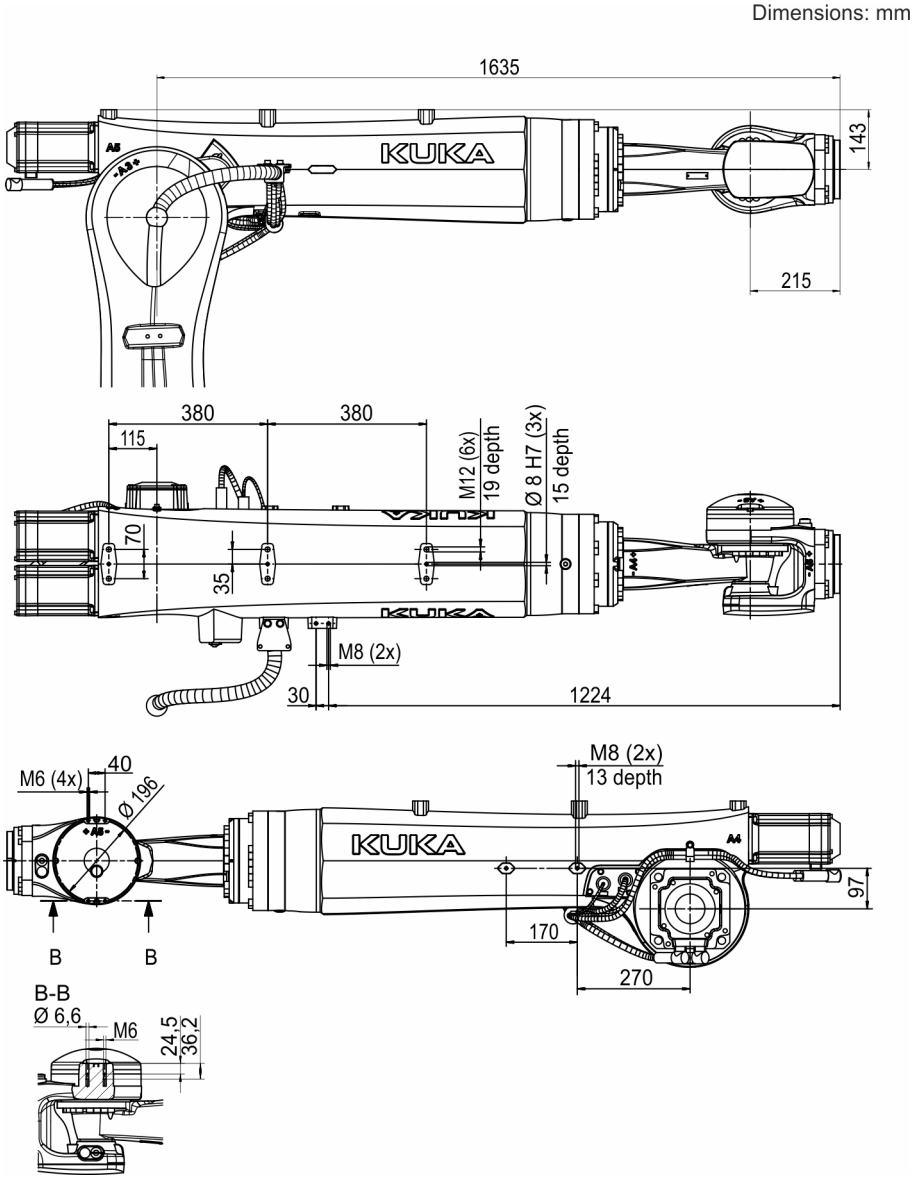

Fig. 4-38: Fastening of supplementary load on arm/in-line wrist, KR 180 R3500-2 K

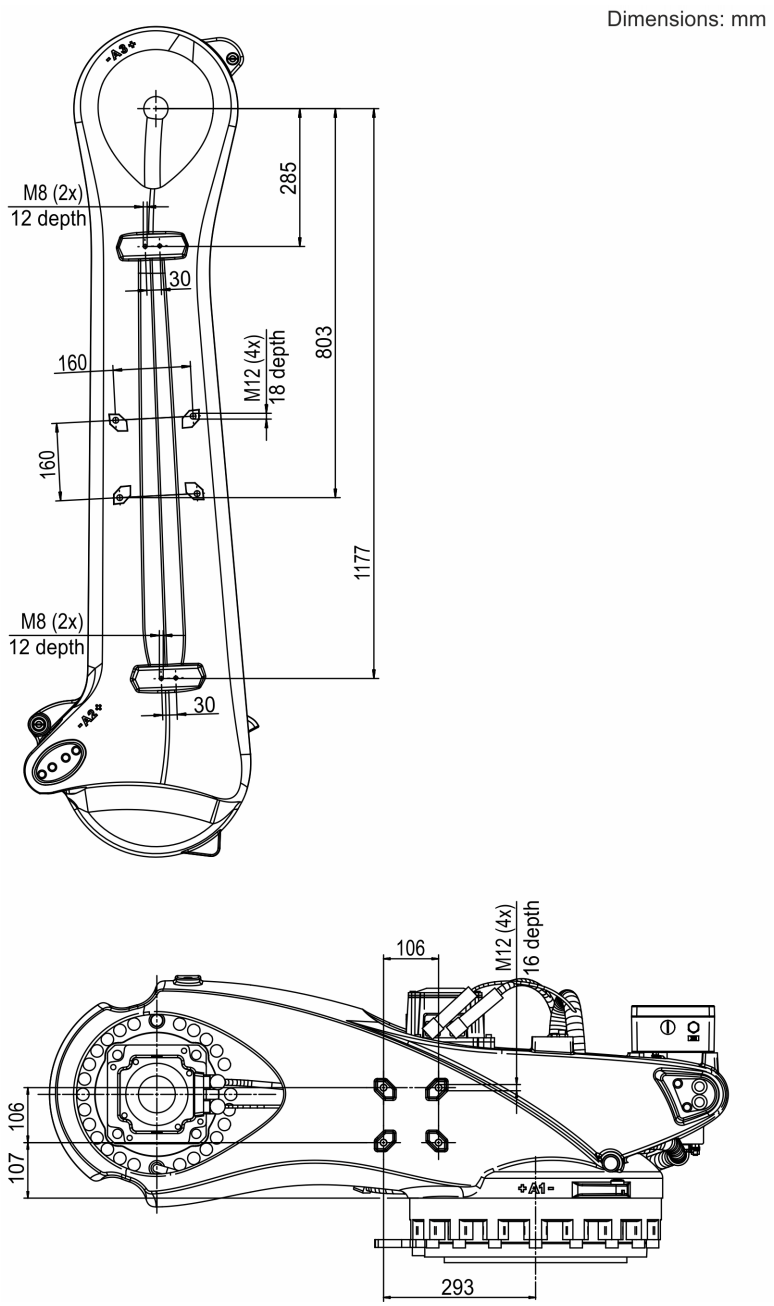

Fig. 4-39: Fastening of supplementary load on rotating column/link arm, KR 180 R3500-2 K

4.5.4 Foundation loads, KR 180 R3500-2 K

Depending on the payload (e.g. tool), supplementary load and the robot's own mass (weight), the motion of the robot generates forces and torques which are transmitted to the foundation.

The specified values refer to nominal payloads and do not include any safety factors. The actual forces and torques depend on the motion profile as well as the mass, load center of gravity and mass moment of inertia of the payload. It is imperative for the load data to be entered in the robot controller. The robot controller takes the payload into consideration during path planning.

Supplementary loads on A1 (rotating column) and A2 (link arm) are not taken into consideration in the calculation of the foundation load. These must be taken into account in the vertical force (F_v).

The foundation must be able to permanently withstand the forces and torques generated during normal operation.

The EMERGENCY STOP values only rarely occur during the service life of the robot (emergency situations). The frequency depends on the configuration of the system.

WARNING

Danger to life and limb due to insufficient stability of the foundation

An incorrectly dimensioned foundation can fracture and fail. Death, severe injuries or damage to property may result.

- Calculate the foundation loads for each individual case.
- Use the specified installation equipment.

Vertical force F(v)	
F(v normal)	21100 N
F(v max)	25700 N
Horizontal force F(h)	
F(h normal)	8200 N
F(h max)	19900 N
Tilting moment M(k)	
M(k normal)	28000 Nm
M(k max)	44300 Nm
Torque about axis 1 M(r)	
M(r normal)	11300 Nm
M(r max)	18600 Nm

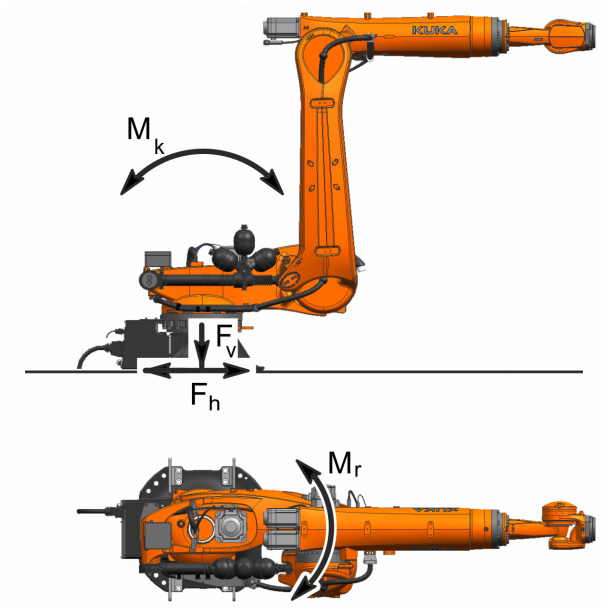

Fig. 4-40: Foundation loads

4.6 Technical data, KR 180 R3500-2 K-F

4.6.1 Basic data, KR 180 R3500-2 K-F

Basic data

	KR 180 R3500-2 K-F
Number of axes	6
Number of controlled axes	6
Volume of working envelope	150.5 m³
Pose repeatability (ISO 9283)	± 0.05 mm
Weight	approx. 1256 kg
Rated payload	180 kg
Maximum payload	228 kg
Maximum reach	3505 mm
Protection rating (IEC 60529)	IP65 / IP67
Protection rating, robot wrist (IEC 60529)	IP65 / IP67
Sound level	< 75 dB (A)
Mounting position	Floor
Footprint	754 mm x 754 mm
Hole pattern: mounting surface for kinematic system	S780
Permissible angle of inclination	± 0 °
Default color	Base frame: black (RAL 9005); Moving parts: KUKA Industrial Orange (RAL 2009)
Controller	KR C5 M6/M7; KR C4
Transformation name	KR C4: KR180R3500K_2 FLR; KR C5: KR180R3500K_2 FLR

Foundry robots

Overpressure in the arm	0.03 MPa (0.3 bar) ±10%
Compressed air	Free of oil and water in accordance with ISO 8573-1:2010 (7:4:4)
Compressed air supply line	Air line in the cable set
Operating pressure (PURGE)	max. 0.03 MPa (0.3 bar) ±10%
Air consumption	0.1 m^3/h
Air line connection	Push-in fitting for hose, 6 mm
Thermal load of the wrist	10 s/min at 180 °C (453 K)
Resistance	Increased resistance to dust, lubricants, coolants and water vapor.

Special paint finish on the robot	Special paint finish on the entire robot, and an additional protective clear coat.
Other ambient conditions	KUKA Deutschland GmbH must be consulted if the robot is to be used under other ambient conditions.

The manipulator is designed in such a way that, in accordance with standard IEC 60529, no water can penetrate into electrical equipment spaces in normal operation. Water spray and corrosive additives can nevertheless lead to corrosion (rust) on uncoated parts. In this case, it is advisable to provide the equipment with corrosion protection. Corrosion does not represent a defect as defined by the standard, as long as it does not have a detrimental effect on the protection rating. The protection rating is valid in the case of compliance with the specified ambient conditions.

Ambient conditions

Humidity class (EN 60204)	-
Classification of environmental conditions (EN 60721-3-3)	-
Cleanroom class (ISO 14644-1)	-
Ambient temperature	
During operation	0 °C to 55 °C (273 K to 328 K)
During storage/transportation	-40 °C to 60 °C (233 K to 333 K)

pH value	7.0 to 9.0

For operation at low temperatures, it may be necessary to warm up the robot.

During operation in the low-temperature range, frost and condensation must be avoided, as damage to property may otherwise arise.

Connecting cables, KR C4

Cable designation	Connector designation robot controller - robot	Interface with robot
Motor cable	X20 - X30	Han® 16HP
Data cable	X21 - X31	Han® 3A Q12
Ground conductor / equipotential bonding 16 mm^2		M8 ring cable lug at both ends

Cable lengths	7 m, 10 m, 15 m, 20 m, 25 m, 30 m, 35 m, 50 m
Max. cable length	50 m
Number of extensions	1

For detailed specifications of the connecting cables, see (>>> *7.4 "Description of the connecting cables, KR C4" Page 209*).

Connecting cables, KR C5

Cable designation	Connector designation robot controller - robot	Interface with robot
Motor cable	6 motor connectors: XD20.1 … XD20.6 - XD30 2 brake connectors: XD10.1, XD10.2 - XD30	Han® 16HP
Data cable	XF21 - XF31	Han® 3A Q12
Ground conductor / equipotential bonding 16 mm^2		M8 ring cable lug at both ends

Cable lengths	7 m, 10 m, 15 m, 20 m, 25 m, 30 m, 35 m, 50 m
Max. cable length	50 m
Number of extensions	1

For detailed specifications of the connecting cables, see (>>> *7.5 "Description of the connecting cables, KR C5" Page 213*).

4.6.2 Axis data, KR 180 R3500-2 K-F

Axis data

Motion range	
A1	±185 °
A2	-120 ° / 70 °
A3	-120 ° / 168 °
A4	±350 °
A5	±125 °
A6	±350 °
Speed with rated payload	
A1	105 °/s
A2	101 °/s
A3	110 °/s
A4	150 °/s
A5	180 °/s
A6	260 °/s

Direction of rotation of robot axes

The following diagram shows the direction of motion and the arrangement of the individual axes for the listed variants of this product family.

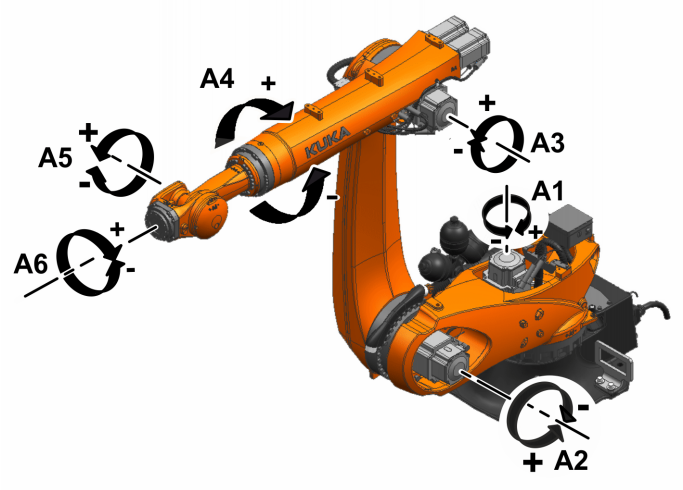

Fig. 4-41: Direction of rotation of the axes

Mastering positions

Mastering position	
A1	-25 °
A2	-100 °
A3	100 °
A4	0 °
A5	0 °
A6	0 °

Working envelope

The following diagrams show the shape and size of the working envelope for these variants of this product family.

The reference point for the working envelope is the intersection of axes 4 and 5.

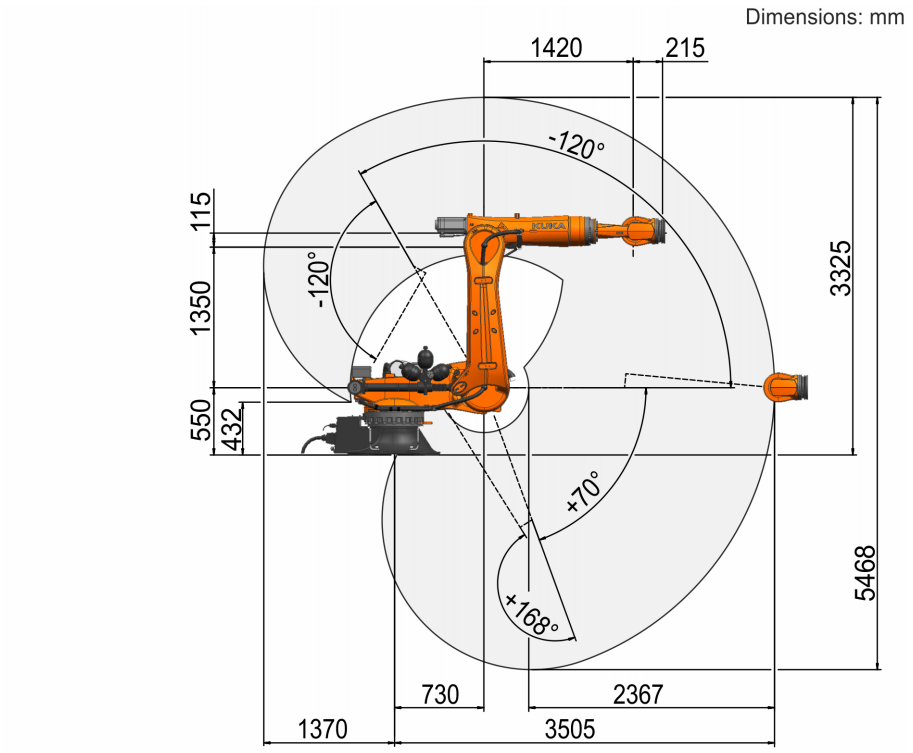

Fig. 4-42: KR 180 R3500-2 K-F, working envelope, side view

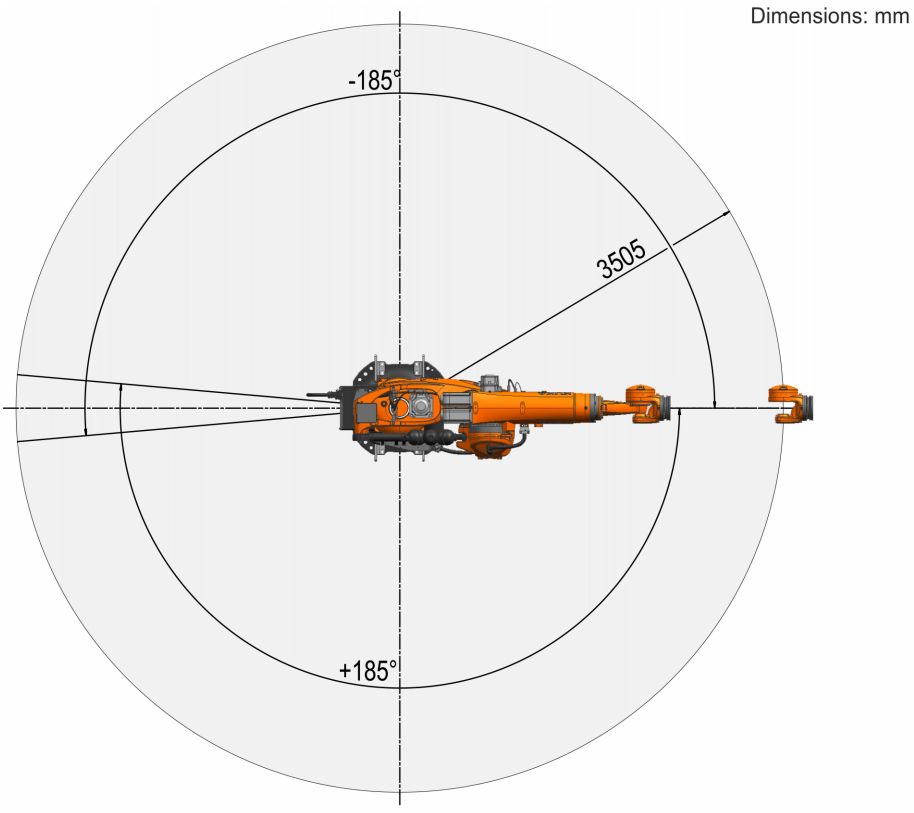

Fig. 4-43: KR 180 R3500-2 K-F, working envelope, top view

4.6.3 Payloads, KR 180 R3500-2 K-F

Payloads

Rated payload	180 kg
Maximum payload	228 kg
Rated supplementary load, base frame	0 kg
Maximum supplementary load, base frame	0 kg
Rated supplementary load, rotating column	0 kg
Maximum supplementary load, rotating column	300 kg
Rated supplementary load, link arm	0 kg
Maximum supplementary load, link arm	130 kg
Rated supplementary load, arm	50 kg
Maximum supplementary load, arm	150 kg

Load center of gravity and mass moment of inertia

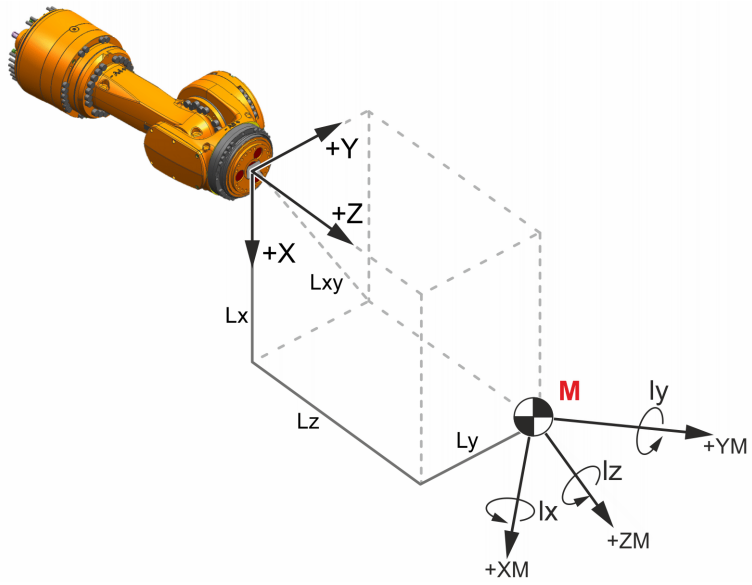

Fig. 4-44: Load center of gravity and mass moment of inertia

Parameter

Parameter/unit		Description
Mass	kg	Payload mass
L_x, L_y, L_z	mm	Position of the center of mass in the reference system

Parameter/unit		Description
A, **B**, **C**	Degrees	Orientation of the principal inertia axes • A: Rotation about the Z axis of the reference system The result is a coordinate system named CS'. • B: Rotation about the Y axis of CS' Result: CS'' • C: Rotation about the X axis of CS'' **Note:** A, B and C are not shown in the diagram.
Mass moments of inertia:		
$\mathbf{I_x}$	kgm^2	Inertia about the X axis of the main axis system
$\mathbf{I_y}$	kgm^2	Inertia about the Y axis of the main axis system
$\mathbf{I_z}$	kgm^2	Inertia about the Z axis of the main axis system

L_x, L_y, L_z and A, B, C unambiguously define the main axis system:

- The origin of the main axis system is the center of mass.
- A characteristic feature of the main axis system is that, among other things, the maximum possible inertia occurs about one of the 3 coordinate axes.

Further information is contained in the **KUKA Load** documentation.

Payload diagram

NOTICE

This loading curve corresponds to the maximum load capacity. Both values (payload and mass moment of inertia) must be checked in all cases. Exceeding this capacity will reduce the service life of the robot and overload the motors and the gears; in any such case KUKA Service must be consulted beforehand.
The values determined here are necessary for planning the robot application. For start-up of the robot, additional input data are required in accordance with the documentation for the system software.
The mass inertia must be verified using KUKA Load. It is imperative for the load data to be entered in the robot controller!

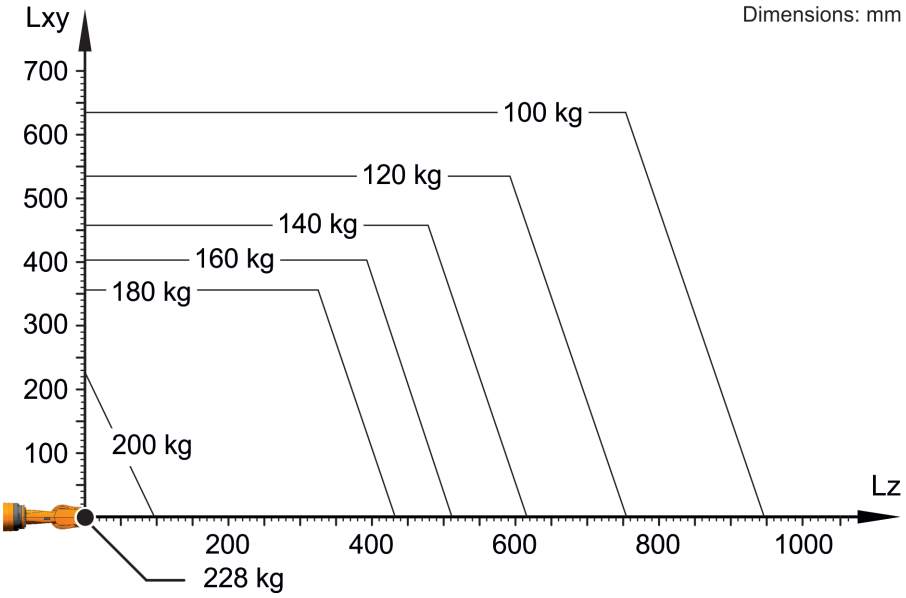

Fig. 4-45: Payload diagram, KR 180 R3500-2 K-F

The KR 180 R3500-2 K-F is designed for a rated payload of 180 kg in order to optimize the dynamic performance of the robot. With reduced load center distances and favorable supplementary loads, a maximum payload of up to 228 kg can be mounted. The specific KUKA Load case must be verified using KUKA. For further consultation, please contact KUKA Service.

Mounting flange

Robot wrist type	ZH210 F
Mounting flange standard	Deviation, see figure

Diameter (hole circle)	125 mm
Thread diameter	M10
Depth of engagement	min. 11.5 mm, max. 16 mm
Number of threads	11
Screw grade	10.9
Locating element	10 ^{H7}

The mounting flange is depicted with axes 4 and 6 in the zero position.

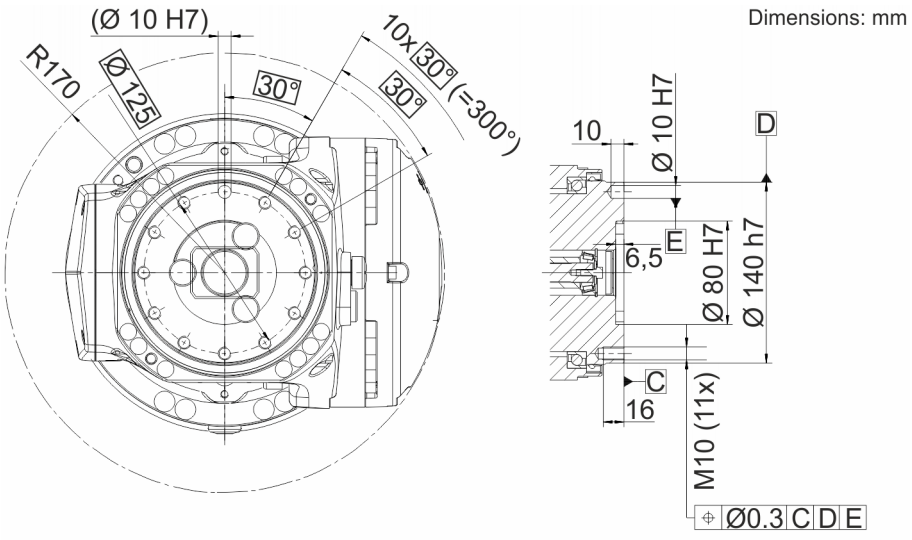

Fig. 4-46: Mounting flange D=125

Flange loads

The motion of the robot causes forces and torques to act on the mounting flange, which are transmitted to the mounted payload (e.g. tool).

The specified values refer to nominal payloads and do not include any safety factors. The actual forces and torques depend on the motion profile as well as the mass, load center of gravity and mass moment of inertia of the payload. It is imperative for the load data to be entered in the robot controller. The robot controller takes the payload into consideration during path planning.

The payload must be able to permanently withstand the forces and torques generated during normal operation.

The EMERGENCY STOP values only rarely occur during the service life of the robot (emergency situations). The frequency depends on the configuration of the system.

WARNING

Danger to life and limb due to insufficient stability of the tool
Incorrectly dimensioned tools can fracture and fail. Death, severe injuries or damage to property may result.

- Calculate the tool for each individual case, taking the load data into consideration.
- Use the specified installation equipment.

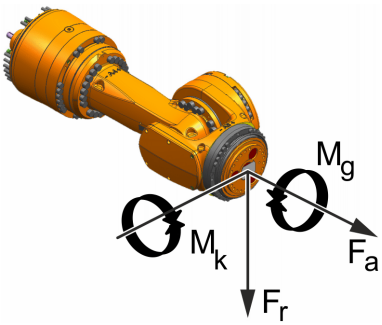

Fig. 4-47: Flange loads

Flange loads during operation	
F(a)	3900 N

F(r)	3300 N
M(k)	2200 Nm
M(g)	1000 Nm
Flange loads in the case of EMERGENCY STOP	
F(a)	5400 N
F(r)	8300 N
M(k)	5300 Nm
M(g)	4300 Nm

Axial force F(a), radial force F(r), tilting torque M(k), torque about mounting flange M(g)

Supplementary load

The robot can carry supplementary loads. When mounting the supplementary loads, be careful to observe the maximum permissible total load. The dimensions and positions of the installation options can be seen in the following diagrams.

Dimensions: mm

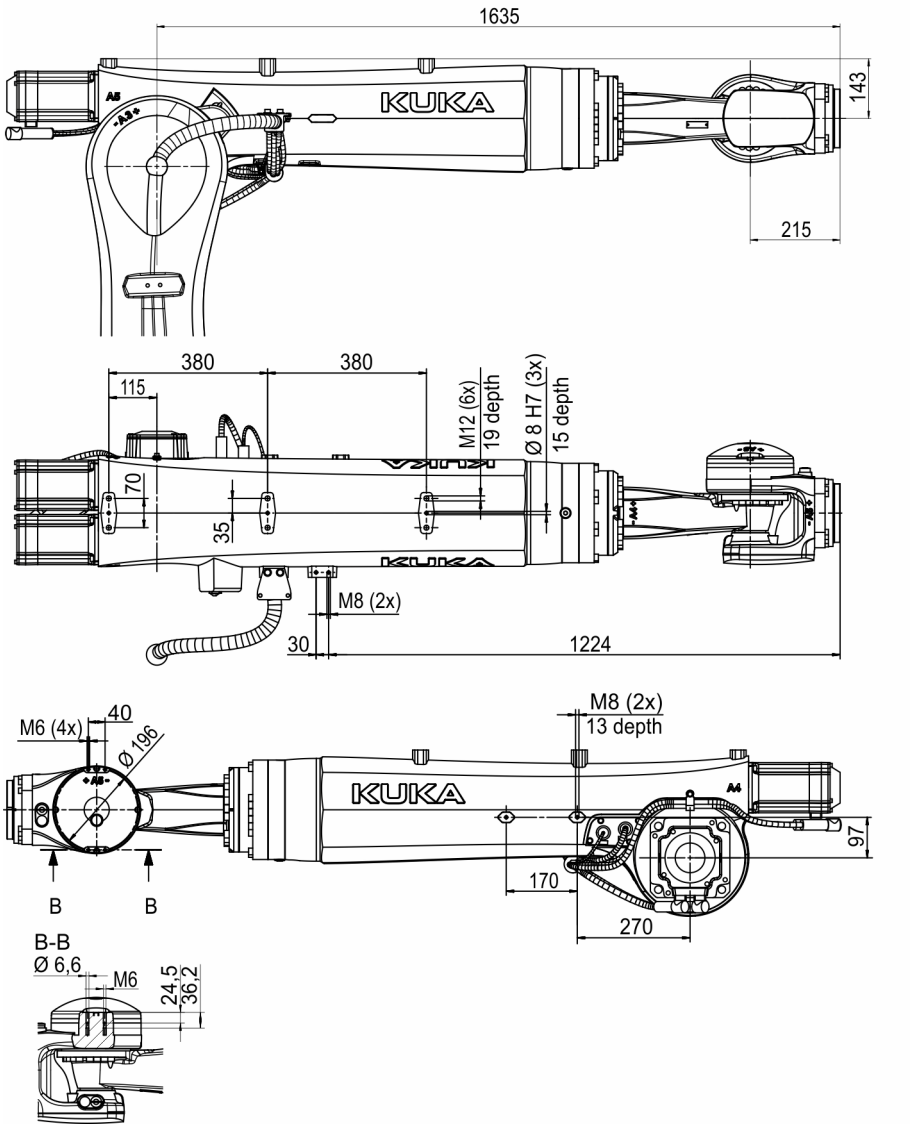

Fig. 4-48: Fastening of supplementary load on arm/in-line wrist, KR 180 R3500-2 K-F

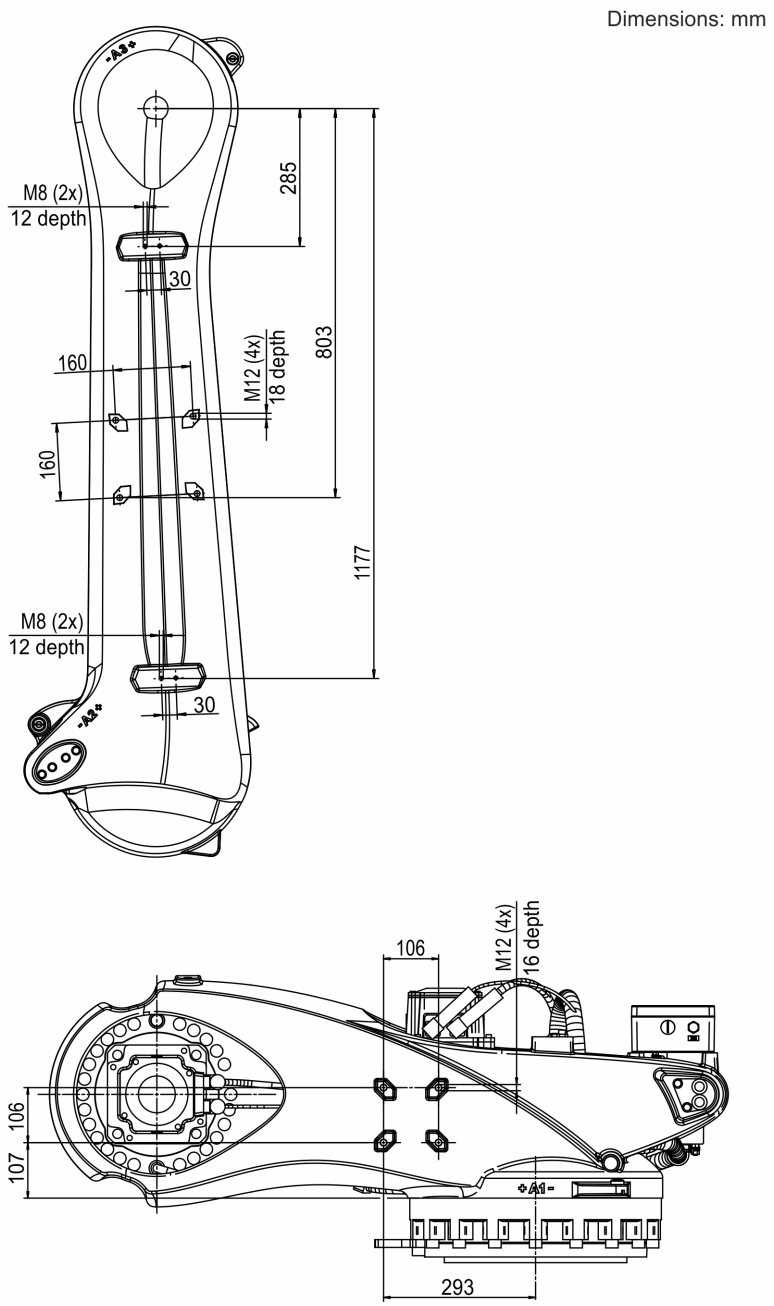

Fig. 4-49: Fastening of supplementary load on rotating column/link arm, KR 180 R3500-2 K-F

4.6.4 Foundation loads, KR 180 R3500-2 K-F

Depending on the payload (e.g. tool), supplementary load and the robot's own mass (weight), the motion of the robot generates forces and torques which are transmitted to the foundation.

The specified values refer to nominal payloads and do not include any safety factors. The actual forces and torques depend on the motion profile as well as the mass, load center of gravity and mass moment of inertia of the payload. It is imperative for the load data to be entered in the robot controller. The robot controller takes the payload into consideration during path planning.

Supplementary loads on A1 (rotating column) and A2 (link arm) are not taken into consideration in the calculation of the foundation load. These must be taken into account in the vertical force (F_v).

The foundation must be able to permanently withstand the forces and torques generated during normal operation.

The EMERGENCY STOP values only rarely occur during the service life of the robot (emergency situations). The frequency depends on the configuration of the system.

WARNING

Danger to life and limb due to insufficient stability of the foundation

An incorrectly dimensioned foundation can fracture and fail. Death, severe injuries or damage to property may result.

- Calculate the foundation loads for each individual case.
- Use the specified installation equipment.

Vertical force F(v)	
F(v normal)	21100 N
F(v max)	25700 N
Horizontal force F(h)	
F(h normal)	8200 N
F(h max)	19900 N
Tilting moment M(k)	
M(k normal)	28000 Nm
M(k max)	44300 Nm
Torque about axis 1 M(r)	
M(r normal)	11300 Nm
M(r max)	18600 Nm

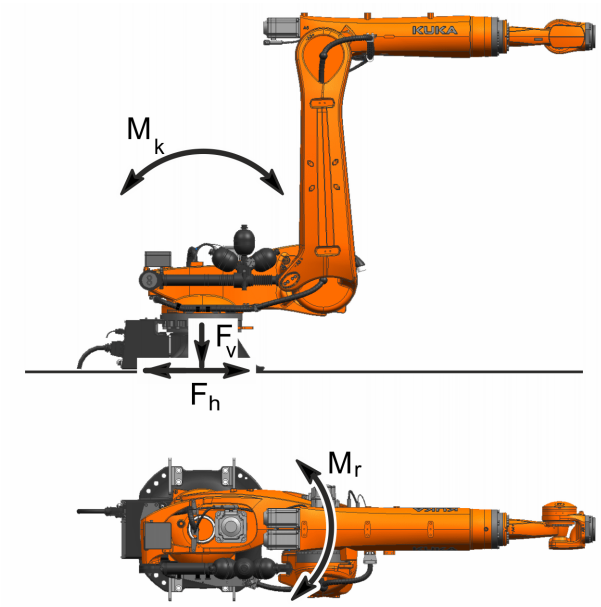

Fig. 4-50: Foundation loads

4.7 Technical data, KR 210 R3300-2 K

4.7.1 Basic data, KR 210 R3300-2 K

Basic data

	KR 210 R3300-2 K
Number of axes	6
Number of controlled axes	6
Volume of working envelope	123.9 m³
Pose repeatability (ISO 9283)	± 0.05 mm
Weight	approx. 1266 kg
Rated payload	210 kg
Maximum payload	273 kg
Maximum reach	3305 mm
Protection rating (IEC 60529)	IP65
Protection rating, robot wrist (IEC 60529)	IP65 / IP67
Sound level	< 75 dB (A)
Mounting position	Floor
Footprint	754 mm x 754 mm
Hole pattern: mounting surface for kinematic system	S780
Permissible angle of inclination	± 0 °
Default color	Base frame: black (RAL 9005); Moving parts: KUKA Industrial Orange (RAL 2009)
Controller	KR C5 M6/M7; KR C4
Transformation name	KR C4: KR210R3300K_2 FLR; KR C5: KR210R3300K_2 FLR

The manipulator is designed in such a way that, in accordance with standard IEC 60529, no water can penetrate into electrical equipment spaces in normal operation. Water spray and corrosive additives can nevertheless lead to corrosion (rust) on uncoated parts. In this case, it is advisable to provide the equipment with corrosion protection. Corrosion does not represent a defect as defined by the standard, as long as it does not have a detrimental effect on the protection rating. The protection rating is valid in the case of compliance with the specified ambient conditions.

Ambient conditions

Humidity class (EN 60204)	-
Classification of environmental conditions (EN 60721-3-3)	-
Cleanroom class (ISO 14644-1)	-
Ambient temperature	
During operation	0 °C to 55 °C (273 K to 328 K)

During storage/transportation	-40 °C to 60 °C (233 K to 333 K)

For operation at low temperatures, it may be necessary to warm up the robot.

During operation in the low-temperature range, frost and condensation must be avoided, as damage to property may otherwise arise.

Connecting cables, KR C4

Cable designation	Connector designation robot controller - robot	Interface with robot
Motor cable	X20 - X30	Han® 16HP
Data cable	X21 - X31	Han® 3A Q12
Ground conductor / equipotential bonding 16 mm^2		M8 ring cable lug at both ends

Cable lengths	7 m, 10 m, 15 m, 20 m, 25 m, 30 m, 35 m, 50 m
Max. cable length	50 m
Number of extensions	1

For detailed specifications of the connecting cables, see (>>> *7.4 "Description of the connecting cables, KR C4" Page 209*).

Connecting cables, KR C5

Cable designation	Connector designation robot controller - robot	Interface with robot
Motor cable	6 motor connectors: XD20.1 … XD20.6 - XD30 2 brake connectors: XD10.1, XD10.2 - XD30	Han® 16HP
Data cable	XF21 - XF31	Han® 3A Q12
Ground conductor / equipotential bonding 16 mm^2		M8 ring cable lug at both ends

Cable lengths	7 m, 10 m, 15 m, 20 m, 25 m, 30 m, 35 m, 50 m
Max. cable length	50 m
Number of extensions	1

For detailed specifications of the connecting cables, see (>>> *7.5 "Description of the connecting cables, KR C5" Page 213*).

4.7.2 Axis data, KR 210 R3300-2 K

Axis data

Motion range	
A1	±185 °
A2	-120 ° / 70 °

A3	-120 ° / 168 °
A4	±350 °
A5	±122.5 °
A6	±350 °
Speed with rated payload	
A1	105 °/s
A2	101 °/s
A3	110 °/s
A4	140 °/s
A5	140 °/s
A6	219 °/s

Direction of rotation of robot axes

The following diagram shows the direction of motion and the arrangement of the individual axes for the listed variants of this product family.

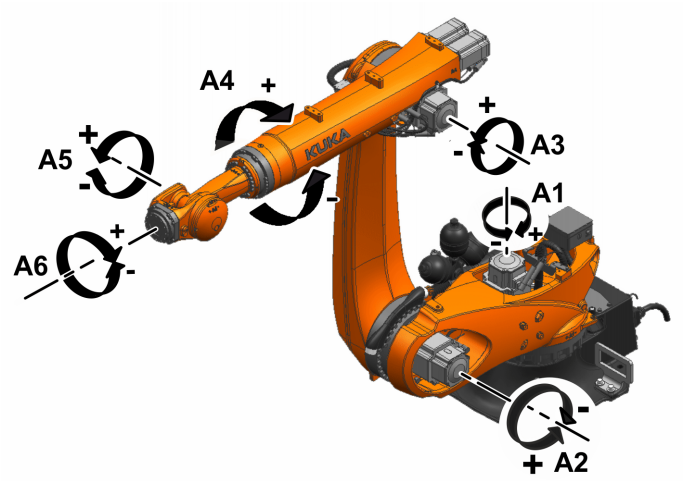

Fig. 4-51: Direction of rotation of the axes

Mastering positions

Mastering position	
A1	-25 °
A2	-100 °
A3	100 °
A4	0 °
A5	0 °
A6	0 °

Working envelope

The following diagrams show the shape and size of the working envelope for these variants of this product family.

The reference point for the working envelope is the intersection of axes 4 and 5.

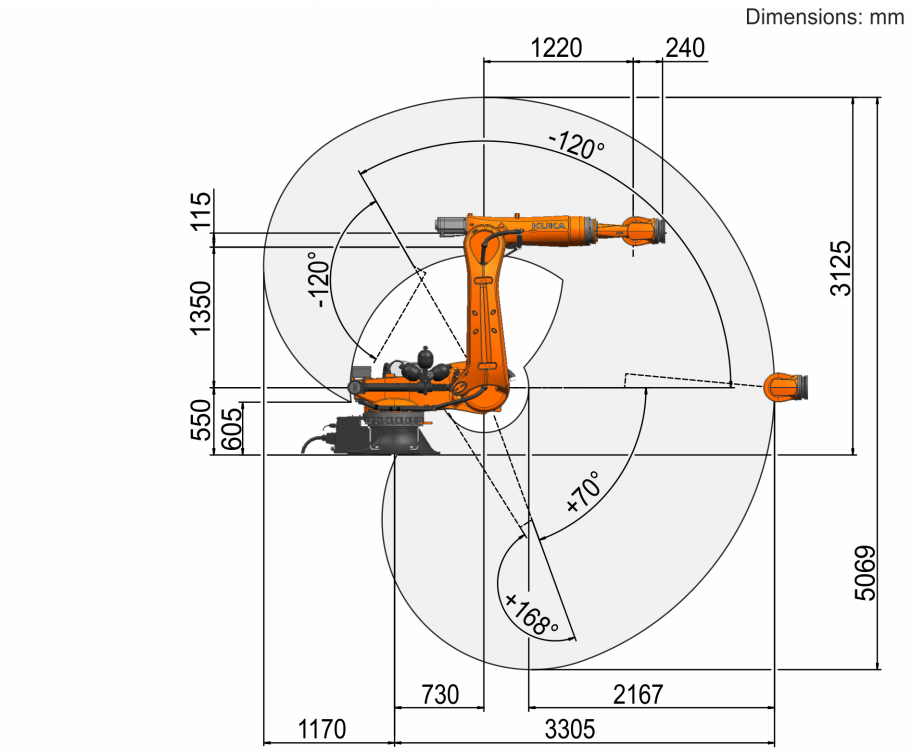

Fig. 4-52: KR 210 R3300-2 K, working envelope, side view

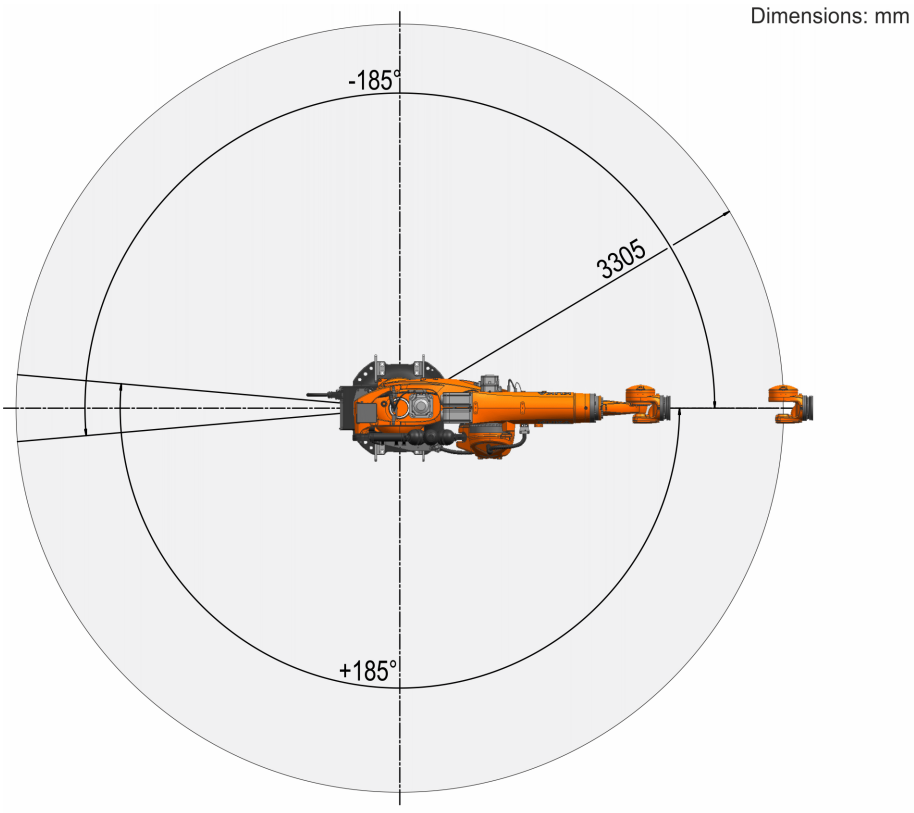

Fig. 4-53: KR 210 R3300-2 K, working envelope, top view

4.7.3 Payloads, KR 210 R3300-2 K

Payloads

Rated payload	210 kg
Maximum payload	273 kg
Rated supplementary load, base frame	0 kg
Maximum supplementary load, base frame	0 kg
Rated supplementary load, rotating column	0 kg
Maximum supplementary load, rotating column	300 kg
Rated supplementary load, link arm	0 kg
Maximum supplementary load, link arm	130 kg
Rated supplementary load, arm	50 kg
Maximum supplementary load, arm	150 kg

Load center of gravity and mass moment of inertia

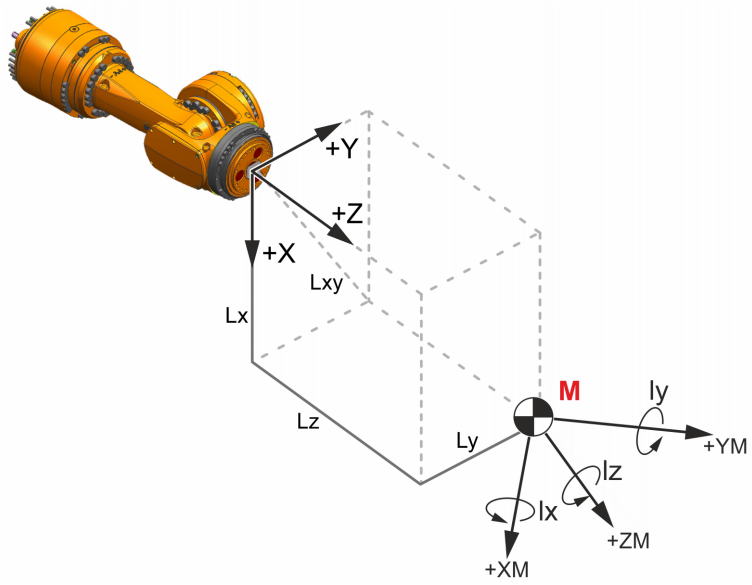

Fig. 4-54: Load center of gravity and mass moment of inertia

Parameter

Parameter/unit		Description
Mass	kg	Payload mass
L_x, L_y, L_z	mm	Position of the center of mass in the reference system

Parameter/unit		Description
A, **B**, **C**	Degrees	Orientation of the principal inertia axes • A: Rotation about the Z axis of the reference system The result is a coordinate system named CS'. • B: Rotation about the Y axis of CS' Result: CS'' • C: Rotation about the X axis of CS'' **Note:** A, B and C are not shown in the diagram.
Mass moments of inertia:		
$\mathbf{I_x}$	kgm^2	Inertia about the X axis of the main axis system
$\mathbf{I_y}$	kgm^2	Inertia about the Y axis of the main axis system
$\mathbf{I_z}$	kgm^2	Inertia about the Z axis of the main axis system

L_x, L_y, L_z and A, B, C unambiguously define the main axis system:

- The origin of the main axis system is the center of mass.
- A characteristic feature of the main axis system is that, among other things, the maximum possible inertia occurs about one of the 3 coordinate axes.

Further information is contained in the **KUKA Load** documentation.

Payload diagram

NOTICE

This loading curve corresponds to the maximum load capacity. Both values (payload and mass moment of inertia) must be checked in all cases. Exceeding this capacity will reduce the service life of the robot and overload the motors and the gears; in any such case KUKA Service must be consulted beforehand.
The values determined here are necessary for planning the robot application. For start-up of the robot, additional input data are required in accordance with the documentation for the system software.
The mass inertia must be verified using KUKA Load. It is imperative for the load data to be entered in the robot controller!

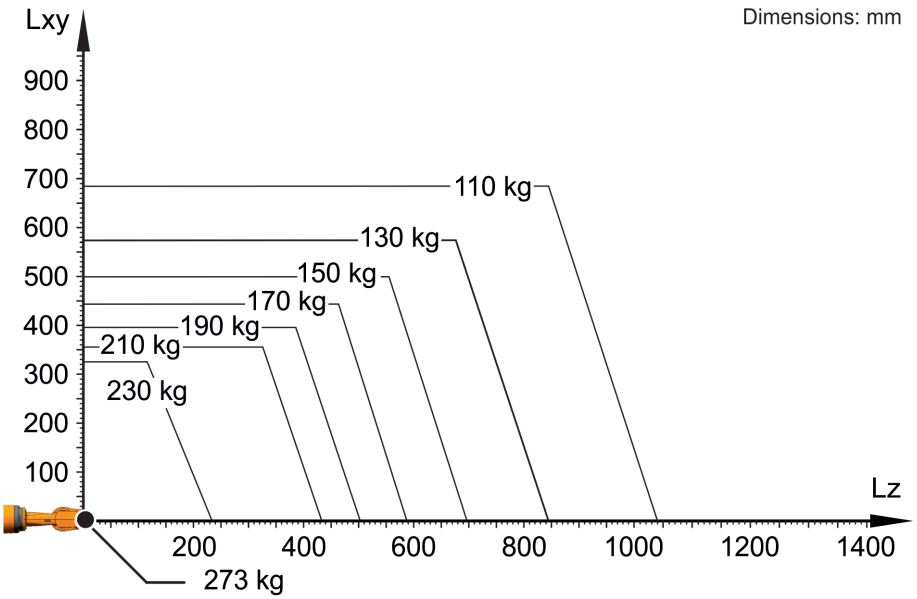

Fig. 4-55: Payload diagram, KR 210 R3300-2 K

The KR 210 R3300-2 K is designed for a rated payload of 210 kg in order to optimize the dynamic performance of the robot. With reduced load center distances and favorable supplementary loads, a maximum payload of up to 273 kg can be mounted. The specific KUKA Load case must be verified using KUKA. For further consultation, please contact KUKA Service.

Mounting flange

Robot wrist type	ZH300
Mounting flange standard	Deviation, see figure

Mounting flange (hole circle)	160 mm
Thread diameter	M10
Depth of engagement	min. 15 mm, max. 19 mm
Number of threads	11
Screw grade	10.9
Locating element	10 ^{H7}

The mounting flange is depicted with axes 4 and 6 in the zero position.

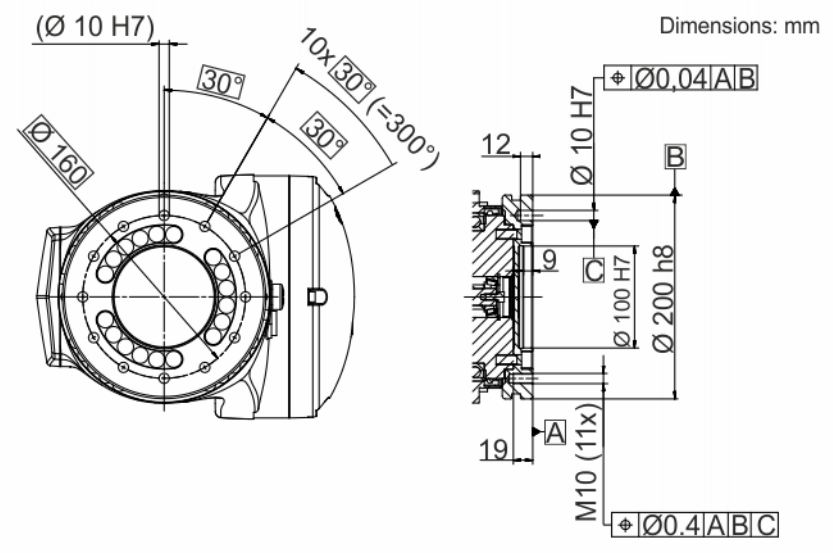

Fig. 4-56: Mounting flange D=160

Flange loads

The motion of the robot causes forces and torques to act on the mounting flange, which are transmitted to the mounted payload (e.g. tool).

The specified values refer to nominal payloads and do not include any safety factors. The actual forces and torques depend on the motion profile as well as the mass, load center of gravity and mass moment of inertia of the payload. It is imperative for the load data to be entered in the robot controller. The robot controller takes the payload into consideration during path planning.

The payload must be able to permanently withstand the forces and torques generated during normal operation.

The EMERGENCY STOP values only rarely occur during the service life of the robot (emergency situations). The frequency depends on the configuration of the system.

WARNING

Danger to life and limb due to insufficient stability of the tool
Incorrectly dimensioned tools can fracture and fail. Death, severe injuries or damage to property may result.

- Calculate the tool for each individual case, taking the load data into consideration.
- Use the specified installation equipment.

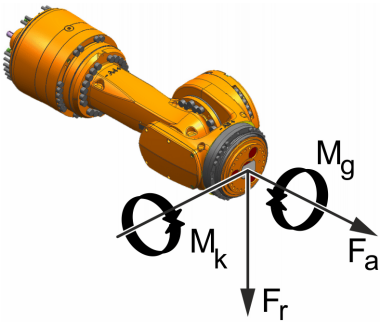

Fig. 4-57: Flange loads

Flange loads during operation	
F(a)	5500 N

F(r)	5000 N
M(k)	2800 Nm
M(g)	1700 Nm
Flange loads in the case of EMERGENCY STOP	
F(a)	8000 N
F(r)	10800 N
M(k)	6200 Nm
M(g)	5300 Nm

Axial force F(a), radial force F(r), tilting torque M(k), torque about mounting flange M(g)

Supplementary load

The robot can carry supplementary loads. When mounting the supplementary loads, be careful to observe the maximum permissible total load. The dimensions and positions of the installation options can be seen in the following diagrams.

Dimensions: mm

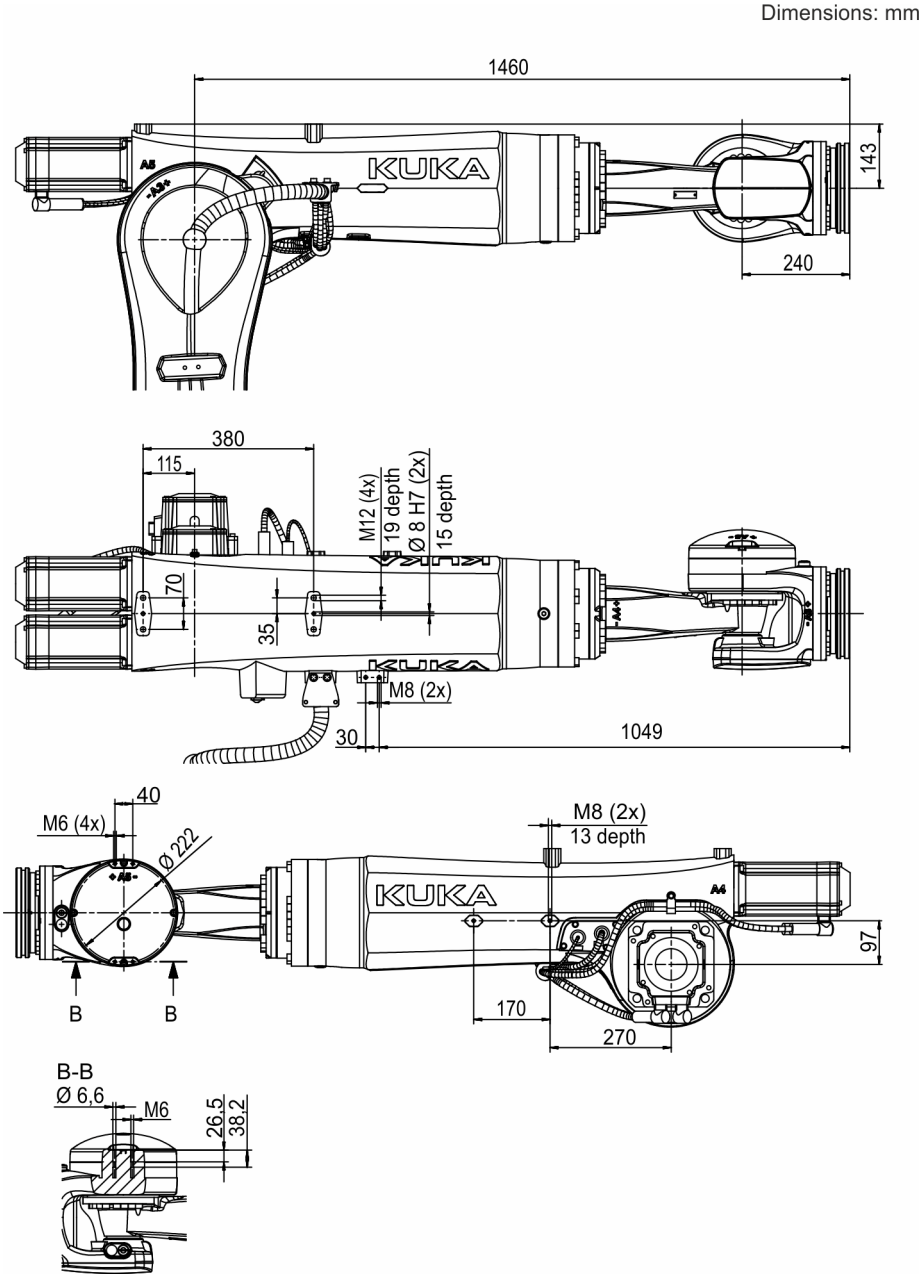

Fig. 4-58: Fastening of supplementary load, arm/in-line wrist, KR 210 R3300-2 K

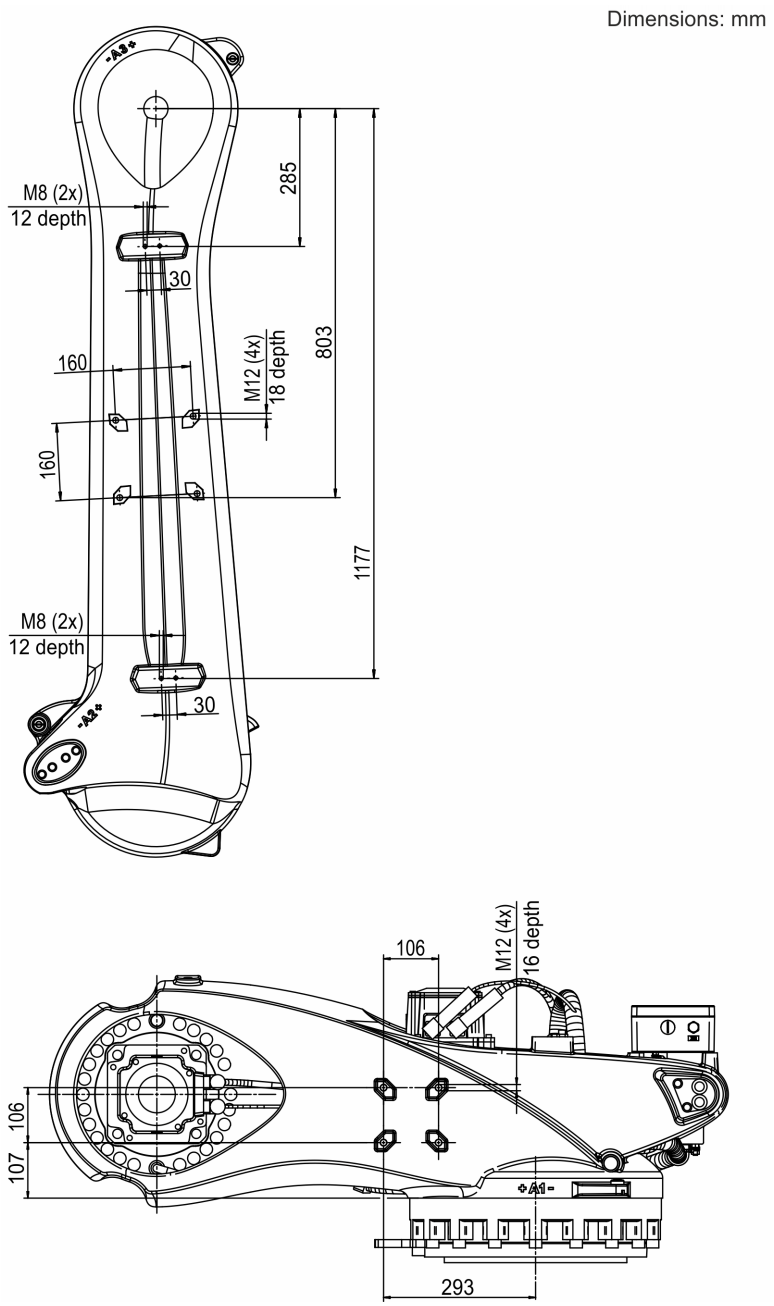

Fig. 4-59: Fastening of supplementary load on rotating column/link arm, KR 210 R3300-2 K

4.7.4 Foundation loads, KR 210 R3300-2 K

Depending on the payload (e.g. tool), supplementary load and the robot's own mass (weight), the motion of the robot generates forces and torques which are transmitted to the foundation.

The specified values refer to nominal payloads and do not include any safety factors. The actual forces and torques depend on the motion profile as well as the mass, load center of gravity and mass moment of inertia of the payload. It is imperative for the load data to be entered in the robot controller. The robot controller takes the payload into consideration during path planning.

Supplementary loads on A1 (rotating column) and A2 (link arm) are not taken into consideration in the calculation of the foundation load. These must be taken into account in the vertical force (F_v).

The foundation must be able to permanently withstand the forces and torques generated during normal operation.

The EMERGENCY STOP values only rarely occur during the service life of the robot (emergency situations). The frequency depends on the configuration of the system.

WARNING

Danger to life and limb due to insufficient stability of the foundation

An incorrectly dimensioned foundation can fracture and fail. Death, severe injuries or damage to property may result.

- Calculate the foundation loads for each individual case.
- Use the specified installation equipment.

Vertical force F(v)	
F(v normal)	21100 N
F(v max)	25700 N
Horizontal force F(h)	
F(h normal)	8200 N
F(h max)	19900 N
Tilting moment M(k)	
M(k normal)	28000 Nm
M(k max)	44300 Nm
Torque about axis 1 M(r)	
M(r normal)	11300 Nm
M(r max)	18600 Nm

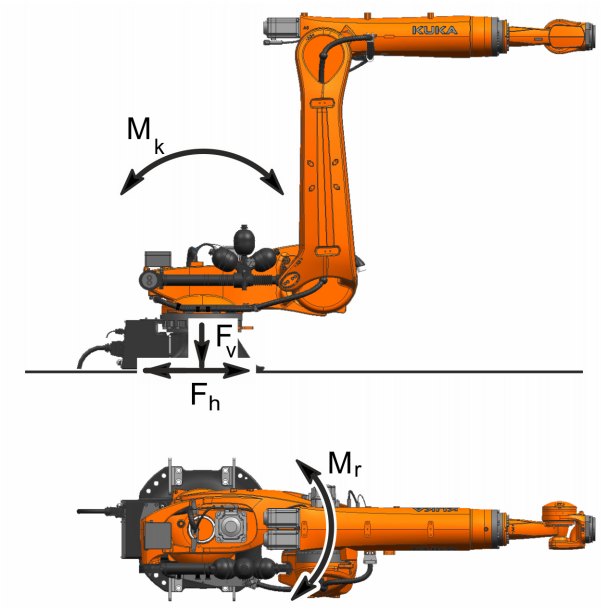

Fig. 4-60: Foundation loads

4.8 Technical data, KR 210 R3300-2 K-F

4.8.1 Basic data, KR 210 R3300-2 K-F

Basic data

	KR 210 R3300-2 K-F
Number of axes	6
Number of controlled axes	6
Volume of working envelope	123.9 m³
Pose repeatability (ISO 9283)	± 0.05 mm
Weight	approx. 1266 kg
Rated payload	210 kg
Maximum payload	273 kg
Maximum reach	3305 mm
Protection rating (IEC 60529)	IP65 / IP67
Protection rating, robot wrist (IEC 60529)	IP65 / IP67
Sound level	< 75 dB (A)
Mounting position	Floor
Footprint	754 mm x 754 mm
Hole pattern: mounting surface for kinematic system	S780
Permissible angle of inclination	± 0 °
Default color	Base frame: black (RAL 9005); Moving parts: KUKA Industrial Orange (RAL 2009)
Controller	KR C5 M6/M7; KR C4
Transformation name	KR C4: KR210R3300K_2 FLR; KR C5: KR210R3300K_2 FLR

Foundry robots

Overpressure in the arm	0.03 MPa (0.3 bar) ±10%
Compressed air	Free of oil and water in accordance with ISO 8573-1:2010 (7:4:4)
Compressed air supply line	Air line in the cable set
Operating pressure (PURGE)	max. 0.03 MPa (0.3 bar) ±10%
Air consumption	0.1 m^3/h
Air line connection	Push-in fitting for hose, 6 mm
Thermal load of the wrist	10 s/min at 180 °C (453 K)
Resistance	Increased resistance to dust, lubricants, coolants and water vapor.

Special paint finish on the robot	Special paint finish on the entire robot, and an additional protective clear coat.
Other ambient conditions	KUKA Deutschland GmbH must be consulted if the robot is to be used under other ambient conditions.

The manipulator is designed in such a way that, in accordance with standard IEC 60529, no water can penetrate into electrical equipment spaces in normal operation. Water spray and corrosive additives can nevertheless lead to corrosion (rust) on uncoated parts. In this case, it is advisable to provide the equipment with corrosion protection. Corrosion does not represent a defect as defined by the standard, as long as it does not have a detrimental effect on the protection rating. The protection rating is valid in the case of compliance with the specified ambient conditions.

Ambient conditions

Humidity class (EN 60204)	-
Classification of environmental conditions (EN 60721-3-3)	-
Cleanroom class (ISO 14644-1)	-
Ambient temperature	
During operation	0 °C to 55 °C (273 K to 328 K)
During storage/transportation	-40 °C to 60 °C (233 K to 333 K)

pH value	7.0 to 9.0

For operation at low temperatures, it may be necessary to warm up the robot.

During operation in the low-temperature range, frost and condensation must be avoided, as damage to property may otherwise arise.

Connecting cables, KR C4

Cable designation	Connector designation robot controller - robot	Interface with robot
Motor cable	X20 - X30	Han® 16HP
Data cable	X21 - X31	Han® 3A Q12
Ground conductor / equipotential bonding 16 mm^2		M8 ring cable lug at both ends

Cable lengths	7 m, 10 m, 15 m, 20 m, 25 m, 30 m, 35 m, 50 m
Max. cable length	50 m
Number of extensions	1

For detailed specifications of the connecting cables, see (>>> *7.4 "Description of the connecting cables, KR C4" Page 209*).

Connecting cables, KR C5

Cable designation	Connector designation robot controller - robot	Interface with robot
Motor cable	6 motor connectors: XD20.1 … XD20.6 - XD30 2 brake connectors: XD10.1, XD10.2 - XD30	Han® 16HP
Data cable	XF21 - XF31	Han® 3A Q12
Ground conductor / equipotential bonding 16 mm^2		M8 ring cable lug at both ends

Cable lengths	7 m, 10 m, 15 m, 20 m, 25 m, 30 m, 35 m, 50 m
Max. cable length	50 m
Number of extensions	1

For detailed specifications of the connecting cables, see (>>> *7.5 "Description of the connecting cables, KR C5" Page 213*).

4.8.2 Axis data, KR 210 R3300-2 K-F

Axis data

Motion range	
A1	±185 °
A2	-120 ° / 70 °
A3	-120 ° / 168 °
A4	±350 °
A5	±122.5 °
A6	±350 °
Speed with rated payload	
A1	105 °/s
A2	101 °/s
A3	110 °/s
A4	140 °/s
A5	140 °/s
A6	219 °/s

Direction of rotation of robot axes

The following diagram shows the direction of motion and the arrangement of the individual axes for the listed variants of this product family.

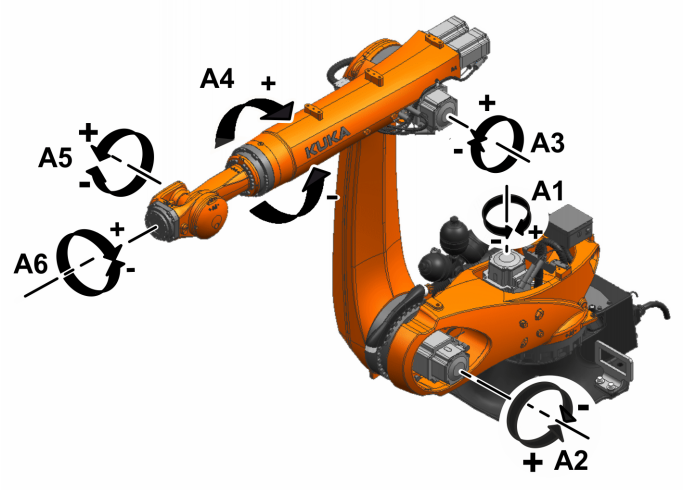

Fig. 4-61: Direction of rotation of the axes

Mastering positions

Mastering position	
A1	-25 °
A2	-100 °
A3	100 °
A4	0 °
A5	0 °
A6	0 °

Working envelope

The following diagrams show the shape and size of the working envelope for these variants of this product family.

The reference point for the working envelope is the intersection of axes 4 and 5.

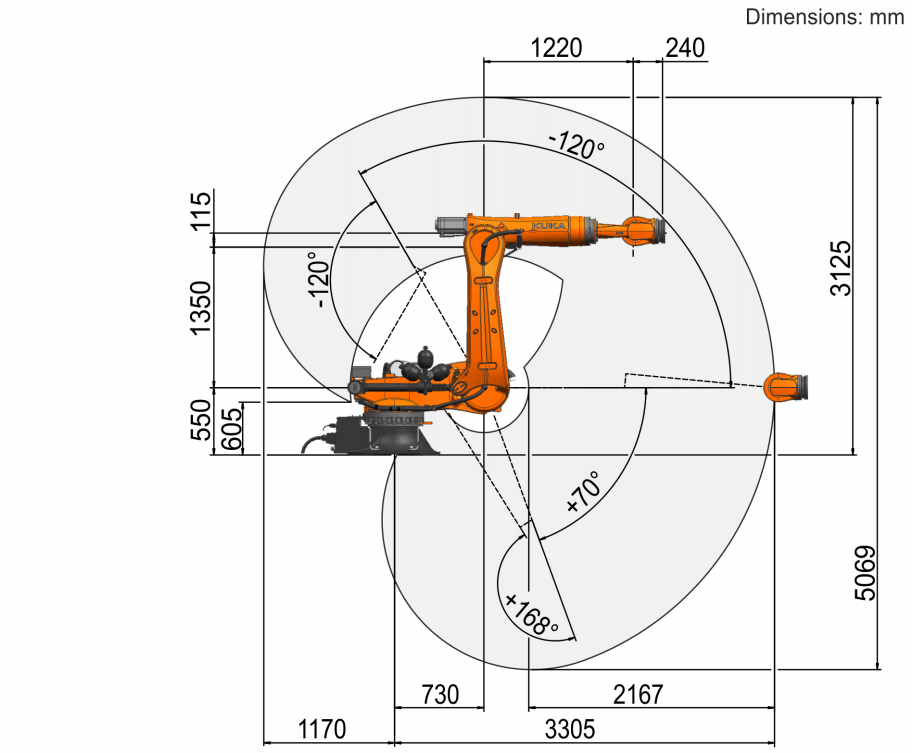

Fig. 4-62: KR 210 R3300-2 K-F, working envelope, side view

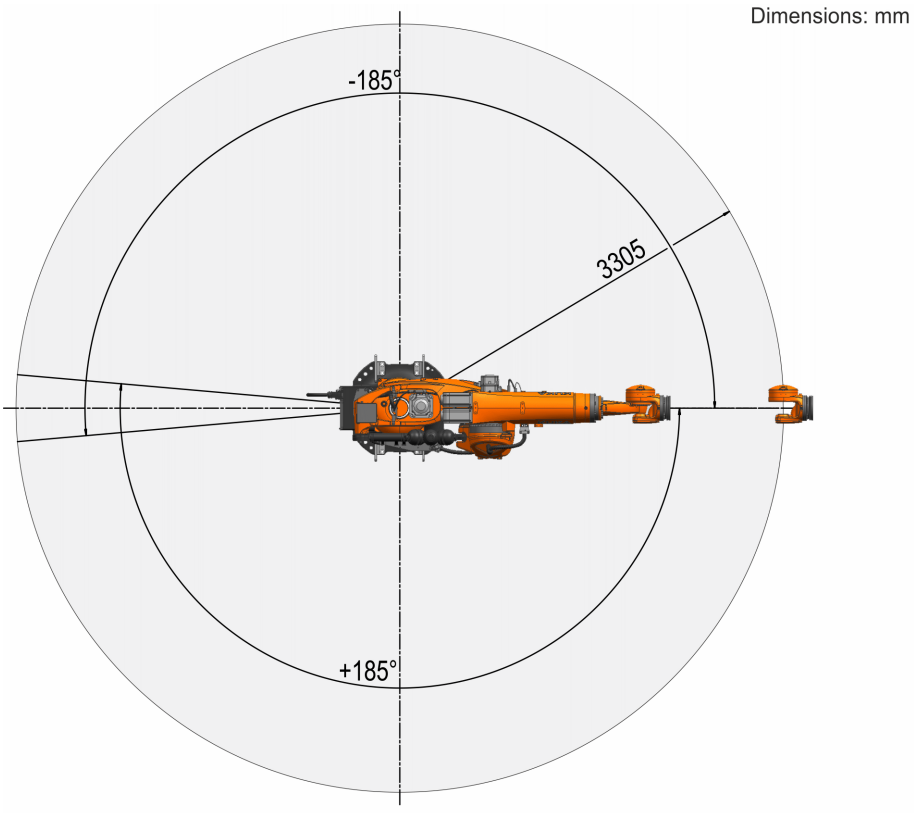

Fig. 4-63: KR 210 R3300-2 K-F, working envelope, top view

4.8.3 Payloads, KR 210 R3300-2 K-F

Payloads

Rated payload	210 kg
Maximum payload	273 kg
Rated supplementary load, base frame	0 kg
Maximum supplementary load, base frame	0 kg
Rated supplementary load, rotating column	0 kg
Maximum supplementary load, rotating column	300 kg
Rated supplementary load, link arm	0 kg
Maximum supplementary load, link arm	130 kg
Rated supplementary load, arm	50 kg
Maximum supplementary load, arm	150 kg

Load center of gravity and mass moment of inertia

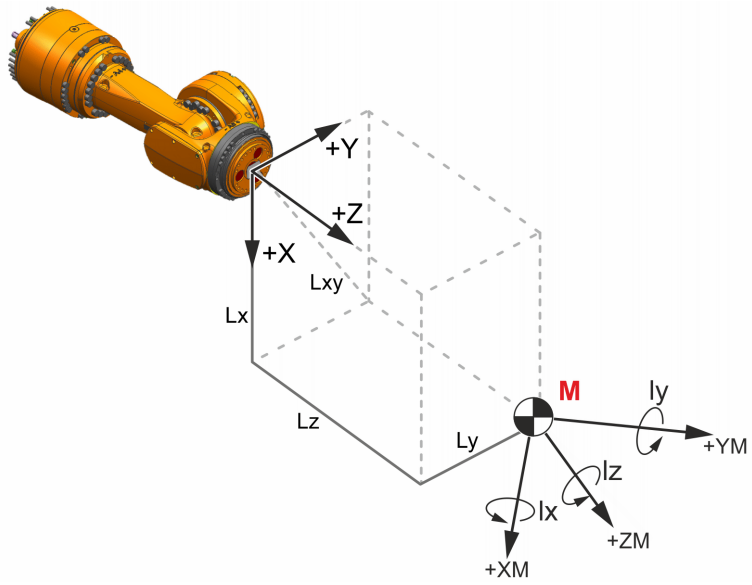

Fig. 4-64: Load center of gravity and mass moment of inertia

Parameter

Parameter/unit		Description
Mass	kg	Payload mass
L_x, L_y, L_z	mm	Position of the center of mass in the reference system

Parameter/unit		Description
A, **B**, **C**	Degrees	Orientation of the principal inertia axes • A: Rotation about the Z axis of the reference system The result is a coordinate system named CS'. • B: Rotation about the Y axis of CS' Result: CS'' • C: Rotation about the X axis of CS'' **Note:** A, B and C are not shown in the diagram.
Mass moments of inertia:		
$\mathbf{I_x}$	kgm^2	Inertia about the X axis of the main axis system
$\mathbf{I_y}$	kgm^2	Inertia about the Y axis of the main axis system
$\mathbf{I_z}$	kgm^2	Inertia about the Z axis of the main axis system

L_x, L_y, L_z and A, B, C unambiguously define the main axis system:

- The origin of the main axis system is the center of mass.
- A characteristic feature of the main axis system is that, among other things, the maximum possible inertia occurs about one of the 3 coordinate axes.

Further information is contained in the **KUKA Load** documentation.

Payload diagram

NOTICE

This loading curve corresponds to the maximum load capacity. Both values (payload and mass moment of inertia) must be checked in all cases. Exceeding this capacity will reduce the service life of the robot and overload the motors and the gears; in any such case KUKA Service must be consulted beforehand.
The values determined here are necessary for planning the robot application. For start-up of the robot, additional input data are required in accordance with the documentation for the system software.
The mass inertia must be verified using KUKA Load. It is imperative for the load data to be entered in the robot controller!

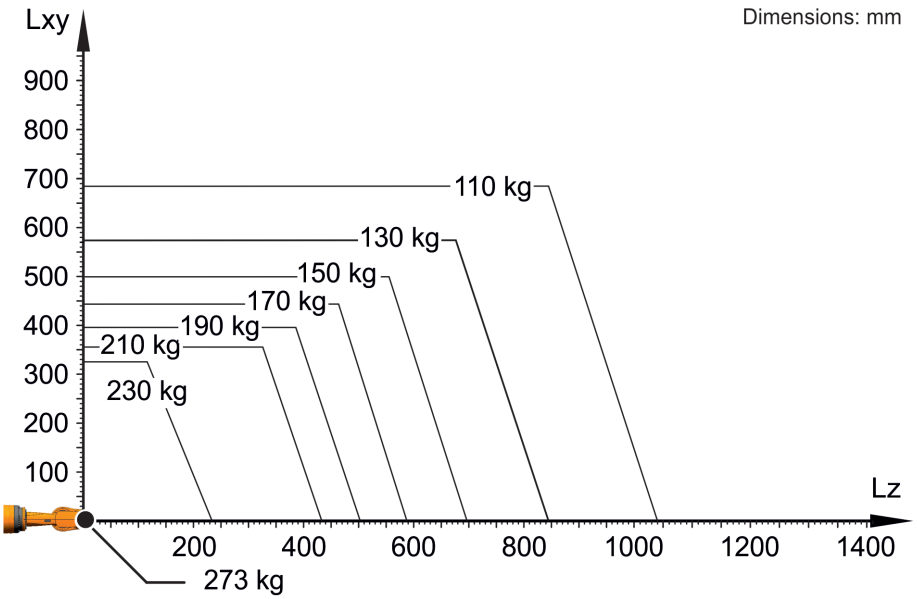

Fig. 4-65: Payload diagram, KR 210 R3300-2 K-F

The KR 210 R3300-2 K-F is designed for a rated payload of 210 kg in order to optimize the dynamic performance of the robot. With reduced load center distances and favorable supplementary loads, a maximum payload of up to 273 kg can be mounted. The specific KUKA Load case must be verified using KUKA. For further consultation, please contact KUKA Service.

Mounting flange

Robot wrist type	ZH300 F
Mounting flange standard	Deviation, see figure

Mounting flange (hole circle)	160 mm
Thread diameter	M10
Depth of engagement	min. 15 mm, max. 19 mm
Number of threads	11
Screw grade	10.9
Locating element	10 ^{H7}

The mounting flange is depicted with axes 4 and 6 in the zero position.

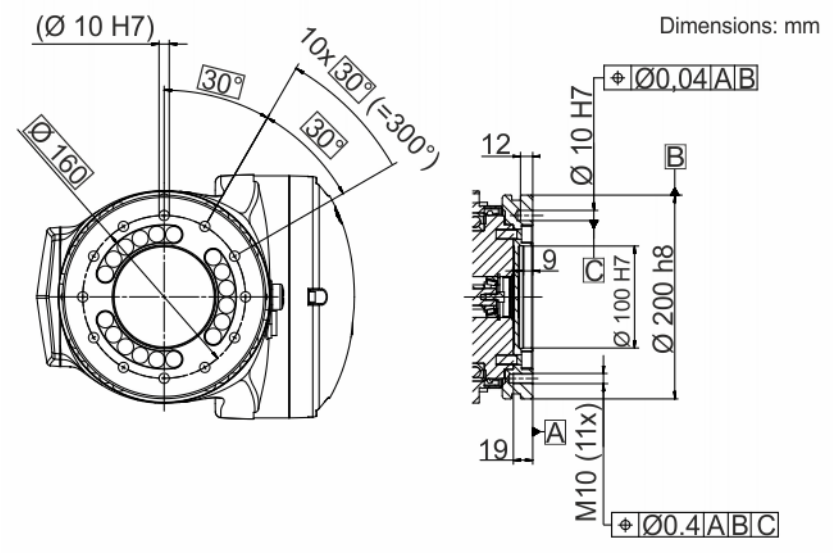

Fig. 4-66: Mounting flange D=160

Flange loads

The motion of the robot causes forces and torques to act on the mounting flange, which are transmitted to the mounted payload (e.g. tool).

The specified values refer to nominal payloads and do not include any safety factors. The actual forces and torques depend on the motion profile as well as the mass, load center of gravity and mass moment of inertia of the payload. It is imperative for the load data to be entered in the robot controller. The robot controller takes the payload into consideration during path planning.

The payload must be able to permanently withstand the forces and torques generated during normal operation.

The EMERGENCY STOP values only rarely occur during the service life of the robot (emergency situations). The frequency depends on the configuration of the system.

WARNING

Danger to life and limb due to insufficient stability of the tool
Incorrectly dimensioned tools can fracture and fail. Death, severe injuries or damage to property may result.

- Calculate the tool for each individual case, taking the load data into consideration.
- Use the specified installation equipment.

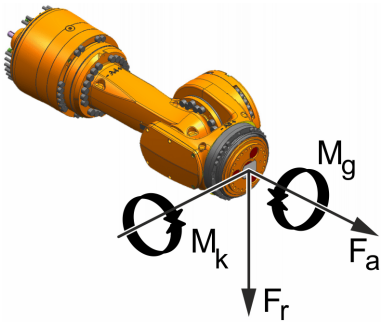

Fig. 4-67: Flange loads

Flange loads during operation	
F(a)	5500 N

F(r)	5000 N
M(k)	2800 Nm
M(g)	1700 Nm
Flange loads in the case of EMERGENCY STOP	
F(a)	8000 N
F(r)	10800 N
M(k)	6200 Nm
M(g)	5300 Nm

Axial force F(a), radial force F(r), tilting torque M(k), torque about mounting flange M(g)

Supplementary load

The robot can carry supplementary loads. When mounting the supplementary loads, be careful to observe the maximum permissible total load. The dimensions and positions of the installation options can be seen in the following diagrams.

Dimensions: mm

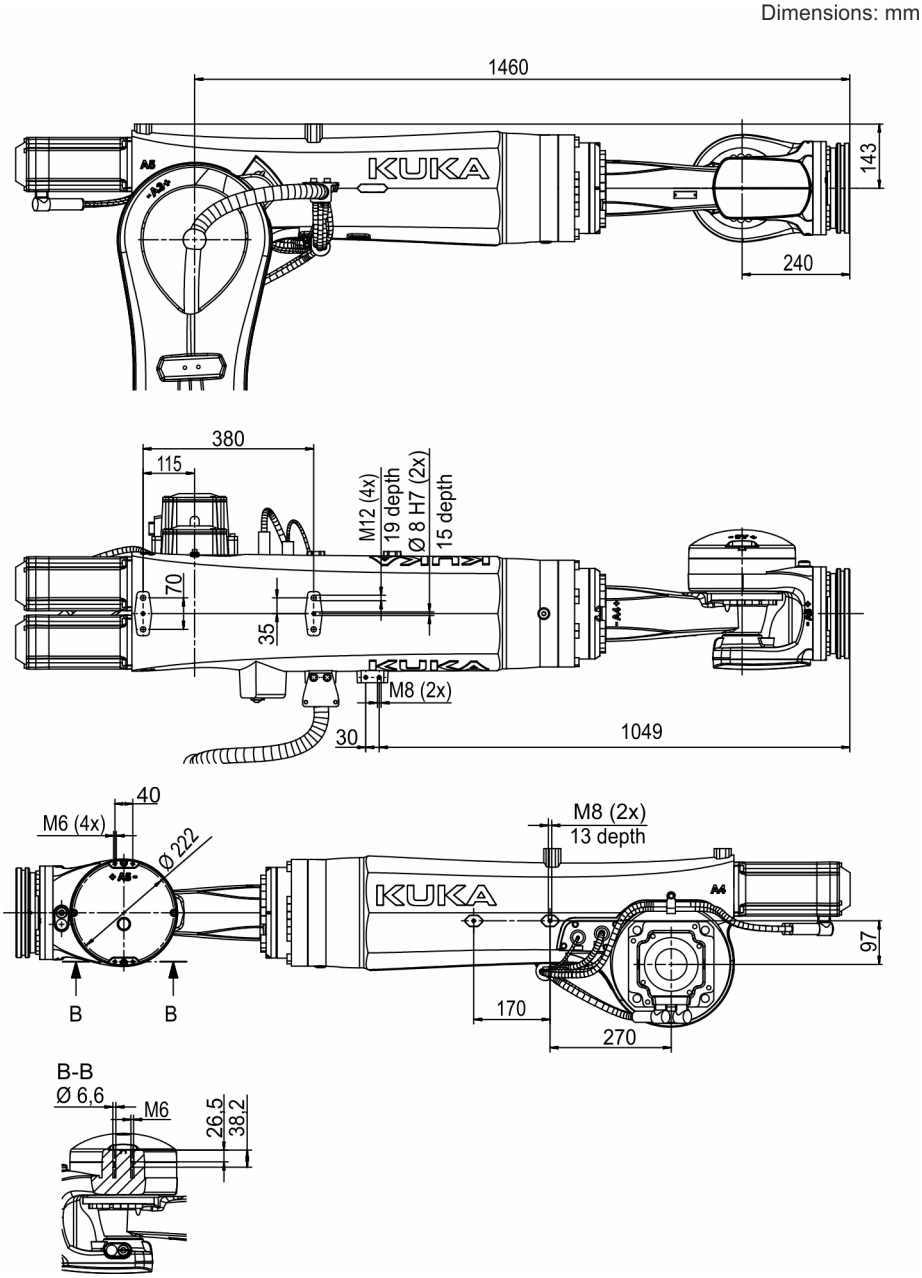

Fig. 4-68: Fastening of supplementary load, arm/in-line wrist, KR 210 R3300-2 K-F

Dimensions: mm

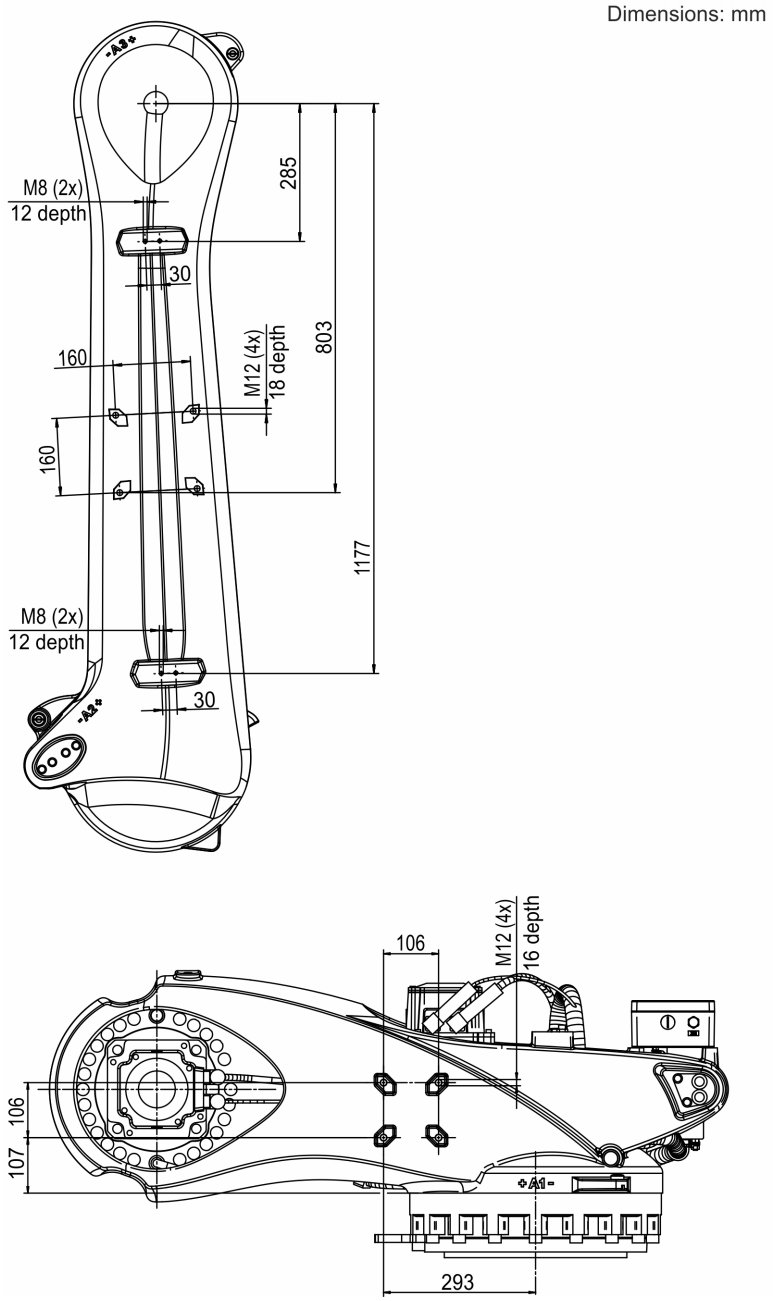

Fig. 4-69: Fastening of supplementary load on rotating column/link arm, KR 210 R3300-2 K-F

4.8.4 Foundation loads, KR 210 R3300-2 K-F

Depending on the payload (e.g. tool), supplementary load and the robot's own mass (weight), the motion of the robot generates forces and torques which are transmitted to the foundation.

The specified values refer to nominal payloads and do not include any safety factors. The actual forces and torques depend on the motion profile as well as the mass, load center of gravity and mass moment of inertia of the payload. It is imperative for the load data to be entered in the robot controller. The robot controller takes the payload into consideration during path planning.

Supplementary loads on A1 (rotating column) and A2 (link arm) are not taken into consideration in the calculation of the foundation load. These must be taken into account in the vertical force (F_v).

The foundation must be able to permanently withstand the forces and torques generated during normal operation.

The EMERGENCY STOP values only rarely occur during the service life of the robot (emergency situations). The frequency depends on the configuration of the system.

WARNING

Danger to life and limb due to insufficient stability of the foundation

An incorrectly dimensioned foundation can fracture and fail. Death, severe injuries or damage to property may result.

- Calculate the foundation loads for each individual case.
- Use the specified installation equipment.

Vertical force F(v)	
F(v normal)	21100 N
F(v max)	25700 N
Horizontal force F(h)	
F(h normal)	8200 N
F(h max)	19900 N
Tilting moment M(k)	
M(k normal)	28000 Nm
M(k max)	44300 Nm
Torque about axis 1 M(r)	
M(r normal)	11300 Nm
M(r max)	18600 Nm

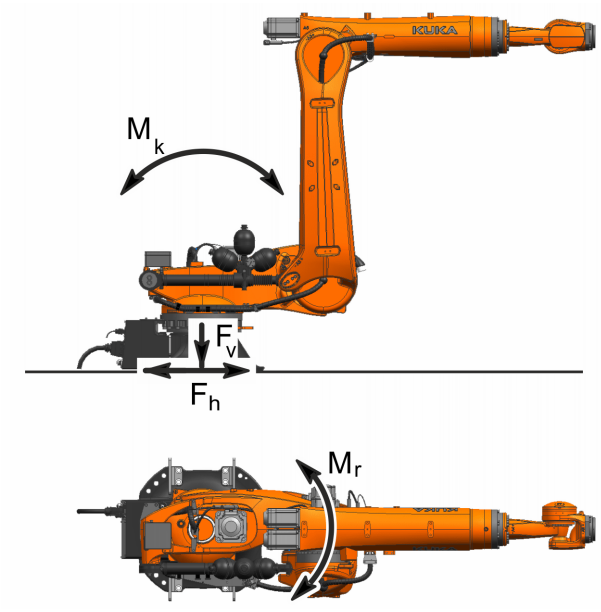

Fig. 4-70: Foundation loads

4.9 Technical data, KR 270 R3100-2 K

4.9.1 Basic data, KR 270 R3100-2 K

Basic data

	KR 270 R3100-2 K
Number of axes	6
Number of controlled axes	6
Volume of working envelope	100.7 m³
Pose repeatability (ISO 9283)	± 0.05 mm
Weight	approx. 1260 kg
Rated payload	270 kg
Maximum payload	344 kg
Maximum reach	3105 mm
Protection rating (IEC 60529)	IP65
Protection rating, robot wrist (IEC 60529)	IP65 / IP67
Sound level	< 75 dB (A)
Mounting position	Floor
Footprint	754 mm x 754 mm
Hole pattern: mounting surface for kinematic system	S780
Permissible angle of inclination	± 0 °
Default color	Base frame: black (RAL 9005); Moving parts: KUKA Industrial Orange (RAL 2009)
Controller	KR C5 M6/M7; KR C4
Transformation name	KR C4: KR270R3100K_2 FLR; KR C5: KR270R3100K_2 FLR

The manipulator is designed in such a way that, in accordance with standard IEC 60529, no water can penetrate into electrical equipment spaces in normal operation. Water spray and corrosive additives can nevertheless lead to corrosion (rust) on uncoated parts. In this case, it is advisable to provide the equipment with corrosion protection. Corrosion does not represent a defect as defined by the standard, as long as it does not have a detrimental effect on the protection rating. The protection rating is valid in the case of compliance with the specified ambient conditions.

Ambient conditions

Humidity class (EN 60204)	-
Classification of environmental conditions (EN 60721-3-3)	-
Cleanroom class (ISO 14644-1)	-
Ambient temperature	
During operation	0 °C to 55 °C (273 K to 328 K)

During storage/transportation	-40 °C to 60 °C (233 K to 333 K)

For operation at low temperatures, it may be necessary to warm up the robot.

During operation in the low-temperature range, frost and condensation must be avoided, as damage to property may otherwise arise.

Connecting cables, KR C4

Cable designation	Connector designation robot controller - robot	Interface with robot
Motor cable	X20 - X30	Han® 16HP
Data cable	X21 - X31	Han® 3A Q12
Ground conductor / equipotential bonding 16 mm^2		M8 ring cable lug at both ends

Cable lengths	7 m, 10 m, 15 m, 20 m, 25 m, 30 m, 35 m, 50 m
Max. cable length	50 m
Number of extensions	1

For detailed specifications of the connecting cables, see (>>> *7.4 "Description of the connecting cables, KR C4" Page 209*).

Connecting cables, KR C5

Cable designation	Connector designation robot controller - robot	Interface with robot
Motor cable	6 motor connectors: XD20.1 … XD20.6 - XD30 2 brake connectors: XD10.1, XD10.2 - XD30	Han® 16HP
Data cable	XF21 - XF31	Han® 3A Q12
Ground conductor / equipotential bonding 16 mm^2		M8 ring cable lug at both ends

Cable lengths	7 m, 10 m, 15 m, 20 m, 25 m, 30 m, 35 m, 50 m
Max. cable length	50 m
Number of extensions	1

For detailed specifications of the connecting cables, see (>>> *7.5 "Description of the connecting cables, KR C5" Page 213*).

4.9.2 Axis data, KR 270 R3100-2 K

Axis data

Motion range	
A1	±185 °
A2	-120 ° / 70 °

A3	-120 ° / 168 °
A4	±350 °
A5	±122.5 °
A6	±350 °
Speed with rated payload	
A1	105 °/s
A2	101 °/s
A3	110 °/s
A4	140 °/s
A5	113 °/s
A6	180 °/s

Direction of rotation of robot axes

The following diagram shows the direction of motion and the arrangement of the individual axes for the listed variants of this product family.

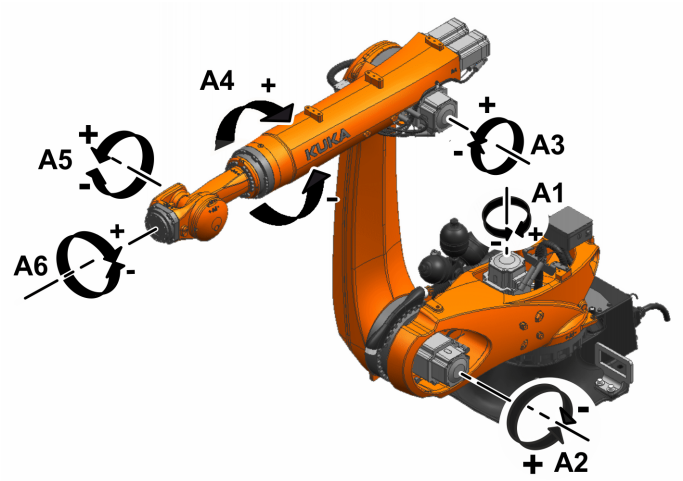

Fig. 4-71: Direction of rotation of the axes

Mastering positions

Mastering position	
A1	-25 °
A2	-100 °
A3	100 °
A4	0 °
A5	0 °
A6	0 °

Working envelope

The following diagrams show the shape and size of the working envelope for these variants of this product family.

The reference point for the working envelope is the intersection of axes 4 and 5.

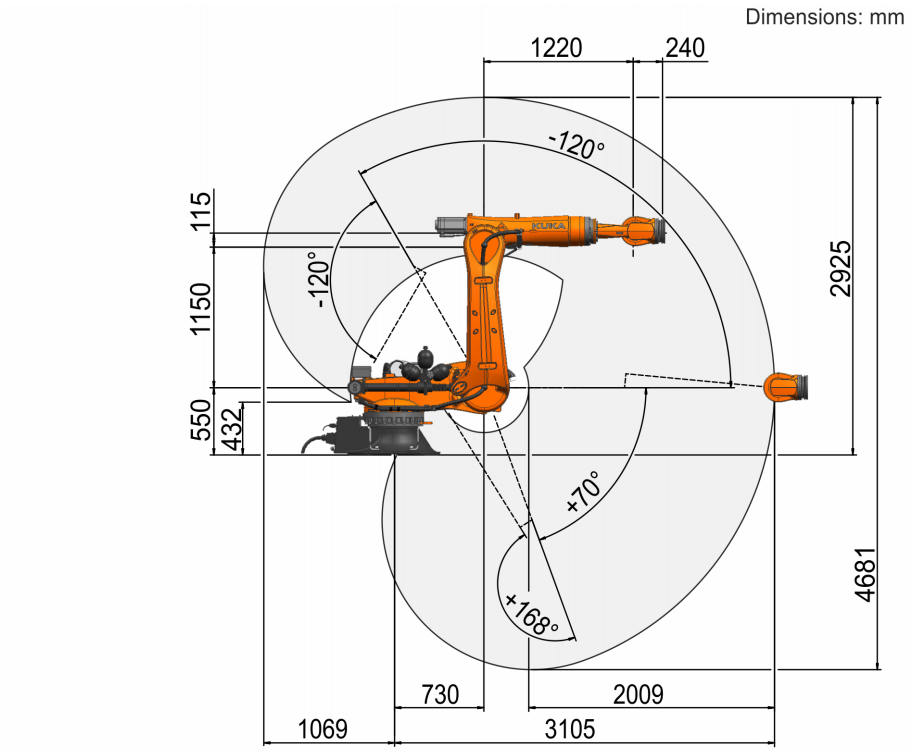

Fig. 4-72: KR 270 R3100-2 K, working envelope, side view

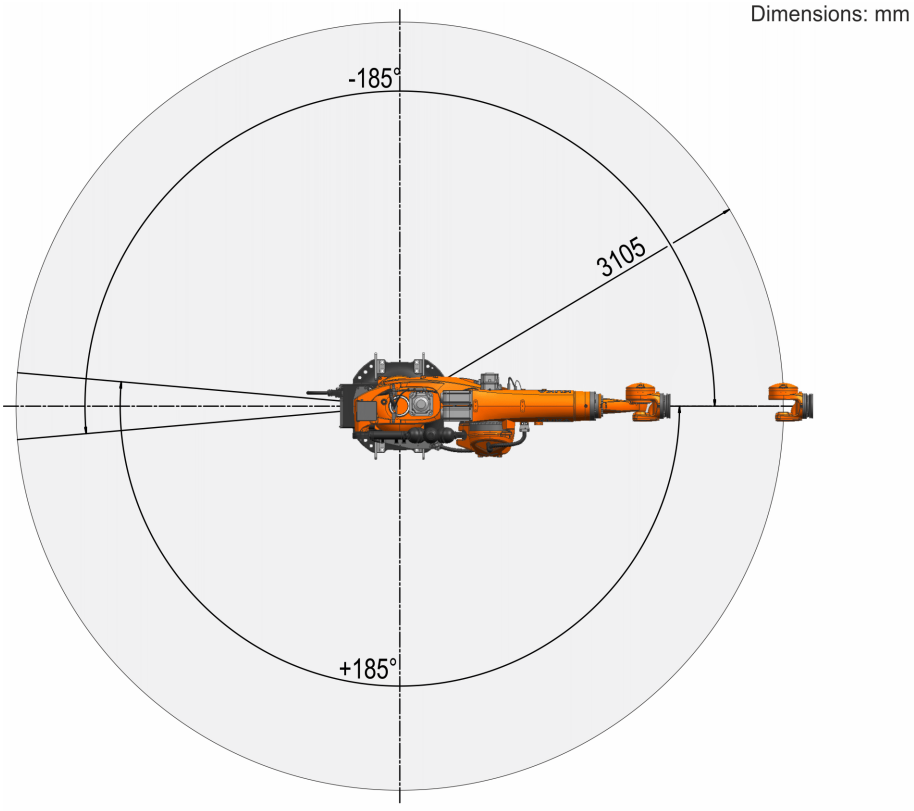

Fig. 4-73: KR 270 R3100-2 K, working envelope, top view

4.9.3 Payloads, KR 270 R3100-2 K

Payloads

Rated payload	270 kg
Maximum payload	344 kg
Rated supplementary load, base frame	0 kg
Maximum supplementary load, base frame	0 kg
Rated supplementary load, rotating column	0 kg
Maximum supplementary load, rotating column	300 kg
Rated supplementary load, link arm	0 kg
Maximum supplementary load, link arm	130 kg
Rated supplementary load, arm	50 kg
Maximum supplementary load, arm	150 kg

Load center of gravity and mass moment of inertia

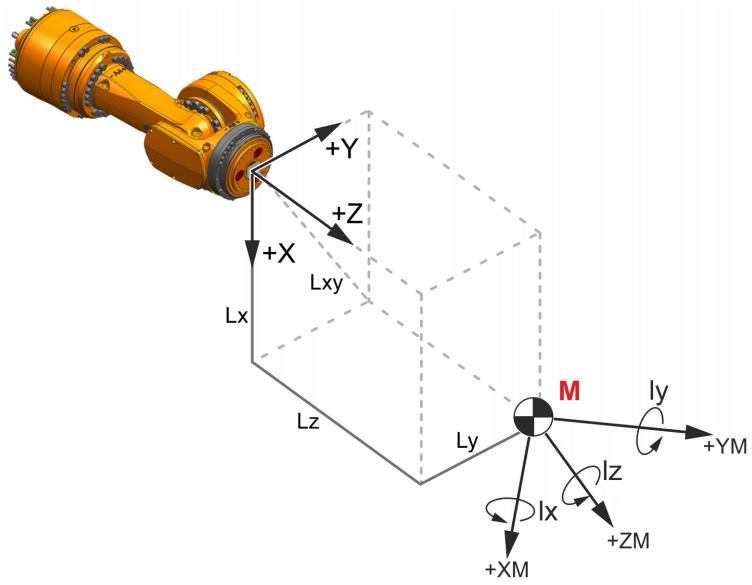

Fig. 4-74: Load center of gravity and mass moment of inertia

Parameter

Parameter/unit		Description
Mass	kg	Payload mass
L_x, L_y, L_z	mm	Position of the center of mass in the reference system

Parameter/unit		Description
A, **B**, **C**	Degrees	Orientation of the principal inertia axes • A: Rotation about the Z axis of the reference system The result is a coordinate system named CS'. • B: Rotation about the Y axis of CS' Result: CS'' • C: Rotation about the X axis of CS'' **Note:** A, B and C are not shown in the diagram.
Mass moments of inertia:		
$\mathbf{I_x}$	kgm^2	Inertia about the X axis of the main axis system
$\mathbf{I_y}$	kgm^2	Inertia about the Y axis of the main axis system
$\mathbf{I_z}$	kgm^2	Inertia about the Z axis of the main axis system

L_x, L_y, L_z and A, B, C unambiguously define the main axis system:

- The origin of the main axis system is the center of mass.
- A characteristic feature of the main axis system is that, among other things, the maximum possible inertia occurs about one of the 3 coordinate axes.

Further information is contained in the **KUKA Load** documentation.

Payload diagram

NOTICE

This loading curve corresponds to the maximum load capacity. Both values (payload and mass moment of inertia) must be checked in all cases. Exceeding this capacity will reduce the service life of the robot and overload the motors and the gears; in any such case KUKA Service must be consulted beforehand.
The values determined here are necessary for planning the robot application. For start-up of the robot, additional input data are required in accordance with the documentation for the system software.
The mass inertia must be verified using KUKA Load. It is imperative for the load data to be entered in the robot controller!

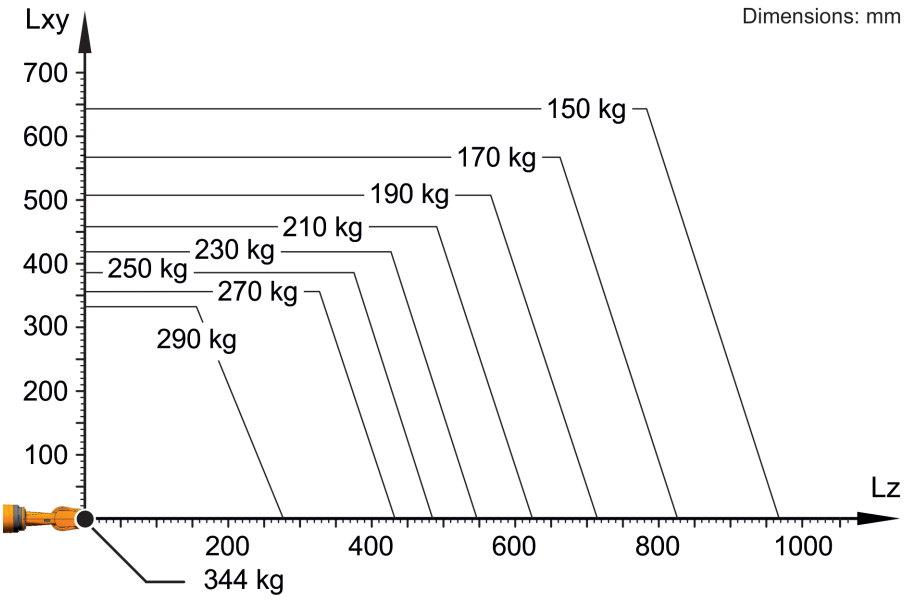

Fig. 4-75: Payload diagram, KR 270 R3100-2 K

The KR 270 R3100-2 K is designed for a rated payload of 270 kg in order to optimize the dynamic performance of the robot. With reduced load center distances and favorable supplementary loads, a maximum payload of up to 344 kg can be mounted. The specific KUKA Load case must be verified using KUKA. For further consultation, please contact KUKA Service.

Mounting flange

Robot wrist type	ZH300
Mounting flange standard	Deviation, see figure

Mounting flange (hole circle)	160 mm
Thread diameter	M10
Depth of engagement	min. 15 mm, max. 19 mm
Number of threads	11
Screw grade	10.9
Locating element	10 ^{H7}

The mounting flange is depicted with axes 4 and 6 in the zero position.

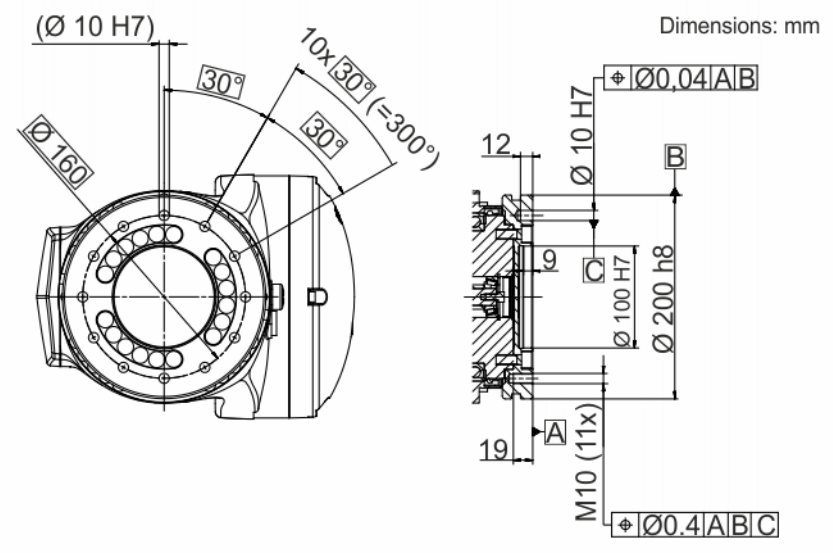

Fig. 4-76: Mounting flange D=160

Flange loads

The motion of the robot causes forces and torques to act on the mounting flange, which are transmitted to the mounted payload (e.g. tool).

The specified values refer to nominal payloads and do not include any safety factors. The actual forces and torques depend on the motion profile as well as the mass, load center of gravity and mass moment of inertia of the payload. It is imperative for the load data to be entered in the robot controller. The robot controller takes the payload into consideration during path planning.

The payload must be able to permanently withstand the forces and torques generated during normal operation.

The EMERGENCY STOP values only rarely occur during the service life of the robot (emergency situations). The frequency depends on the configuration of the system.

WARNING

Danger to life and limb due to insufficient stability of the tool
Incorrectly dimensioned tools can fracture and fail. Death, severe injuries or damage to property may result.

- Calculate the tool for each individual case, taking the load data into consideration.
- Use the specified installation equipment.

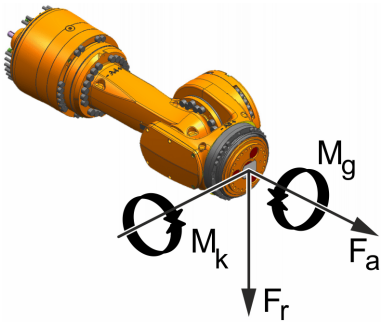

Fig. 4-77: Flange loads

Flange loads during operation	
F(a)	5500 N

F(r)	5000 N
M(k)	2800 Nm
M(g)	1700 Nm
Flange loads in the case of EMERGENCY STOP	
F(a)	8000 N
F(r)	10800 N
M(k)	6200 Nm
M(g)	5300 Nm

Axial force F(a), radial force F(r), tilting torque M(k), torque about mounting flange M(g)

Supplementary load

The robot can carry supplementary loads. When mounting the supplementary loads, be careful to observe the maximum permissible total load. The dimensions and positions of the installation options can be seen in the following diagrams.

Dimensions: mm

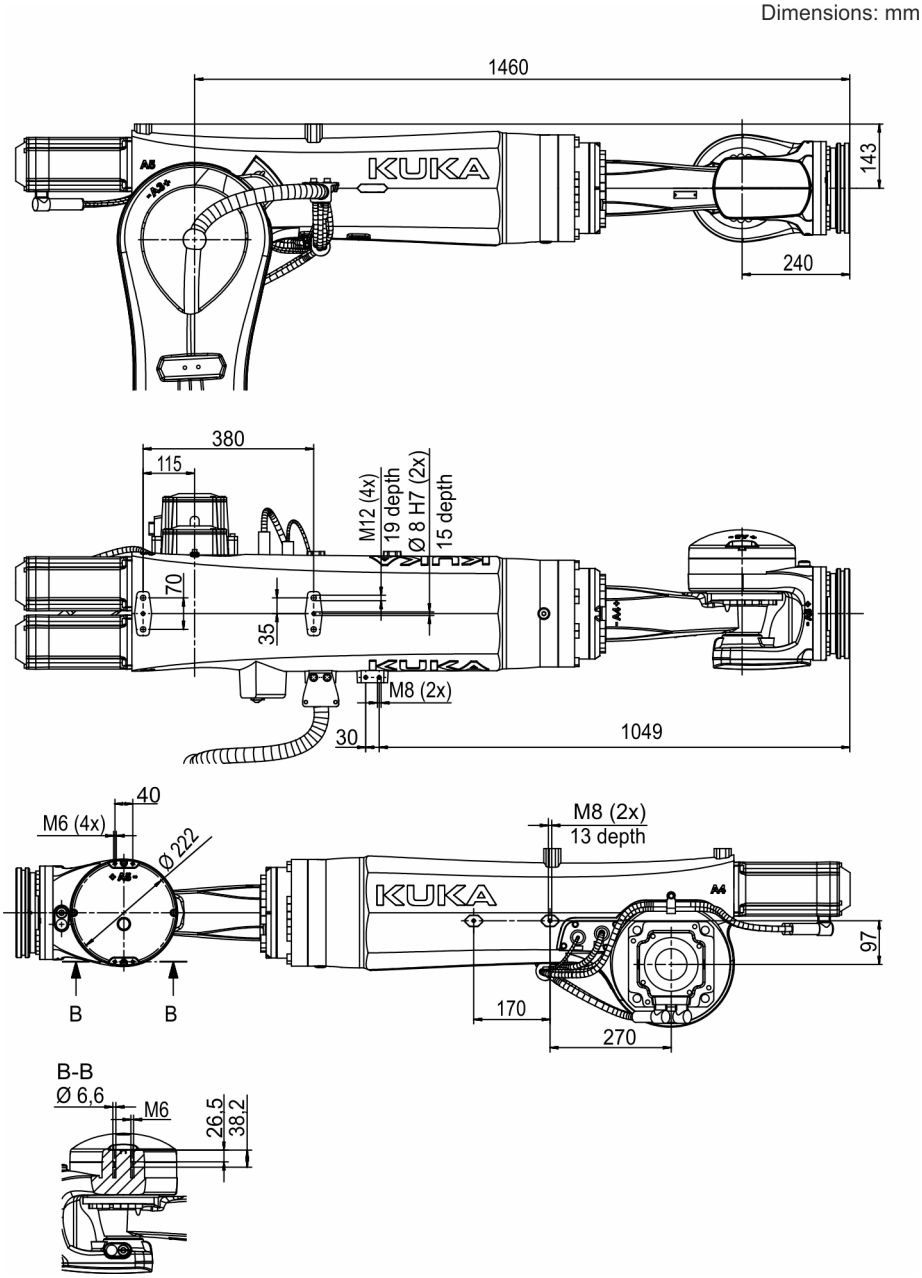

Fig. 4-78: Fastening of supplementary load, arm/in-line wrist, KR 270 R3100-2 K

Dimensions: mm

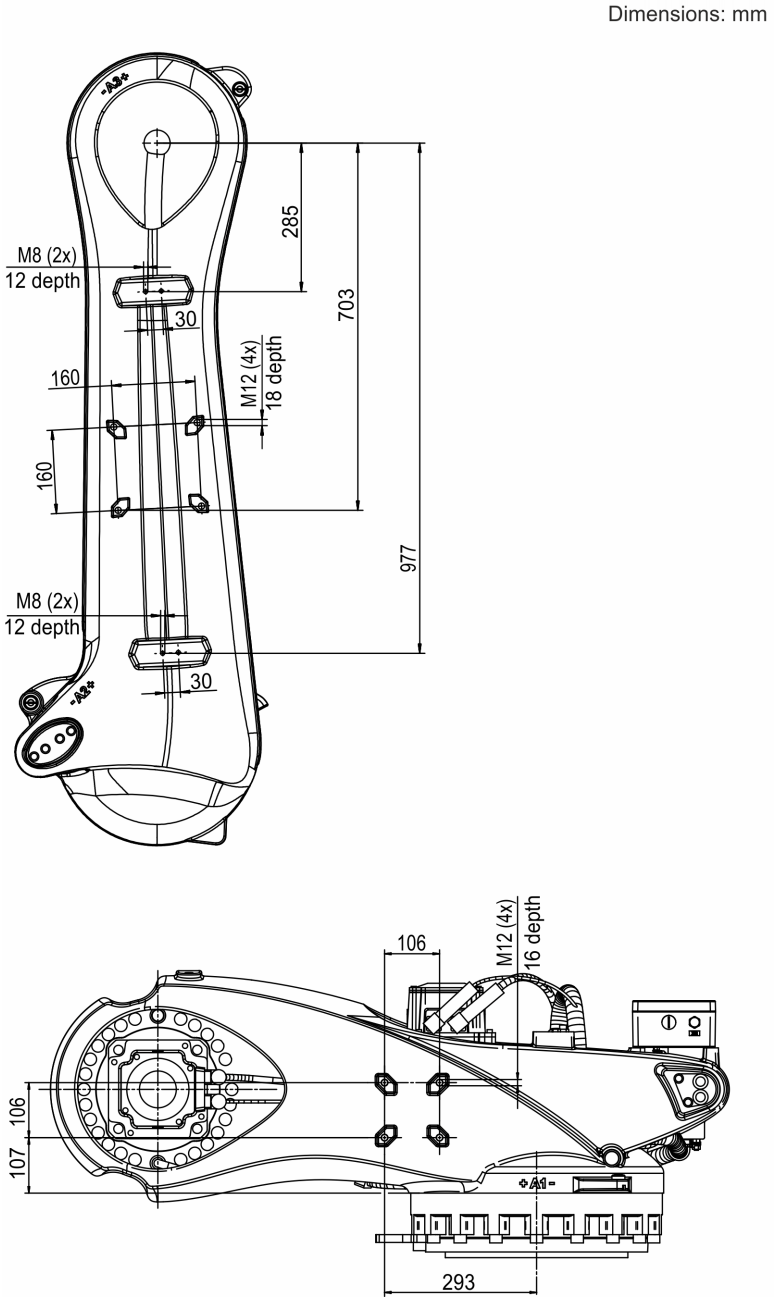

Fig. 4-79: Fastening of supplementary load on rotating column/link arm, KR 270 R3100-2 K

4.9.4 Foundation loads, KR 270 R3100-2 K

Depending on the payload (e.g. tool), supplementary load and the robot's own mass (weight), the motion of the robot generates forces and torques which are transmitted to the foundation.

The specified values refer to nominal payloads and do not include any safety factors. The actual forces and torques depend on the motion profile as well as the mass, load center of gravity and mass moment of inertia of the payload. It is imperative for the load data to be entered in the robot controller. The robot controller takes the payload into consideration during path planning.

Supplementary loads on A1 (rotating column) and A2 (link arm) are not taken into consideration in the calculation of the foundation load. These must be taken into account in the vertical force (F_v).

The foundation must be able to permanently withstand the forces and torques generated during normal operation.

The EMERGENCY STOP values only rarely occur during the service life of the robot (emergency situations). The frequency depends on the configuration of the system.

WARNING

Danger to life and limb due to insufficient stability of the foundation

An incorrectly dimensioned foundation can fracture and fail. Death, severe injuries or damage to property may result.

- Calculate the foundation loads for each individual case.
- Use the specified installation equipment.

Vertical force F(v)	
F(v normal)	21100 N
F(v max)	25700 N
Horizontal force F(h)	
F(h normal)	8200 N
F(h max)	19900 N
Tilting moment M(k)	
M(k normal)	28000 Nm
M(k max)	44300 Nm
Torque about axis 1 M(r)	
M(r normal)	11300 Nm
M(r max)	18600 Nm

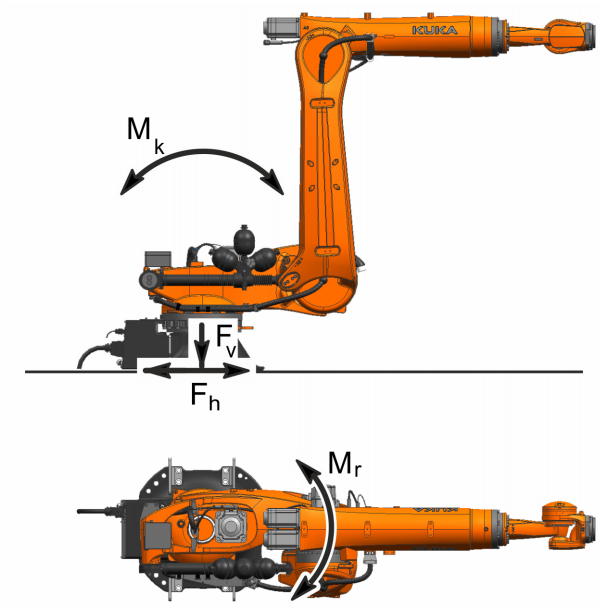

Fig. 4-80: Foundation loads

4.10 Technical data, KR 270 R3100-2 K-F

4.10.1 Basic data, KR 270 R3100-2 K-F

Basic data

	KR 270 R3100-2 K-F
Number of axes	6
Number of controlled axes	6
Volume of working envelope	100.7 m³
Pose repeatability (ISO 9283)	± 0.05 mm
Weight	approx. 1260 kg
Rated payload	270 kg
Maximum payload	344 kg
Maximum reach	3105 mm
Protection rating (IEC 60529)	IP65 / IP67
Protection rating, robot wrist (IEC 60529)	IP65 / IP67
Sound level	< 75 dB (A)
Mounting position	Floor
Footprint	754 mm x 754 mm
Hole pattern: mounting surface for kinematic system	S780
Permissible angle of inclination	± 0 °
Default color	Base frame: black (RAL 9005); Moving parts: KUKA Industrial Orange (RAL 2009)
Controller	KR C5 M6/M7; KR C4
Transformation name	KR C4: KR270R3100K_2 FLR; KR C5: KR270R3100K_2 FLR

Foundry robots

Overpressure in the arm	0.03 MPa (0.3 bar) ±10%
Compressed air	Free of oil and water in accordance with ISO 8573-1:2010 (7:4:4)
Compressed air supply line	Air line in the cable set
Operating pressure (PURGE)	max. 0.03 MPa (0.3 bar) ±10%
Air consumption	0.1 m^3/h
Air line connection	Push-in fitting for hose, 6 mm
Thermal load of the wrist	10 s/min at 180 °C (453 K)
Resistance	Increased resistance to dust, lubricants, coolants and water vapor.

Special paint finish on the robot	Special paint finish on the entire robot, and an additional protective clear coat.
Other ambient conditions	KUKA Deutschland GmbH must be consulted if the robot is to be used under other ambient conditions.

The manipulator is designed in such a way that, in accordance with standard IEC 60529, no water can penetrate into electrical equipment spaces in normal operation. Water spray and corrosive additives can nevertheless lead to corrosion (rust) on uncoated parts. In this case, it is advisable to provide the equipment with corrosion protection. Corrosion does not represent a defect as defined by the standard, as long as it does not have a detrimental effect on the protection rating. The protection rating is valid in the case of compliance with the specified ambient conditions.

Ambient conditions

Humidity class (EN 60204)	-
Classification of environmental conditions (EN 60721-3-3)	-
Cleanroom class (ISO 14644-1)	-
Ambient temperature	
During operation	0 °C to 55 °C (273 K to 328 K)
During storage/transportation	-40 °C to 60 °C (233 K to 333 K)

pH value	7.0 to 9.0

For operation at low temperatures, it may be necessary to warm up the robot.

During operation in the low-temperature range, frost and condensation must be avoided, as damage to property may otherwise arise.

Connecting cables, KR C4

Cable designation	Connector designation robot controller - robot	Interface with robot
Motor cable	X20 - X30	Han® 16HP
Data cable	X21 - X31	Han® 3A Q12
Ground conductor / equipotential bonding 16 mm^2		M8 ring cable lug at both ends

Cable lengths	7 m, 10 m, 15 m, 20 m, 25 m, 30 m, 35 m, 50 m
Max. cable length	50 m
Number of extensions	1

For detailed specifications of the connecting cables, see (>>> *7.4 "Description of the connecting cables, KR C4" Page 209*).

Connecting cables, KR C5

Cable designation	Connector designation robot controller - robot	Interface with robot
Motor cable	6 motor connectors: XD20.1 … XD20.6 - XD30 2 brake connectors: XD10.1, XD10.2 - XD30	Han® 16HP
Data cable	XF21 - XF31	Han® 3A Q12
Ground conductor / equipotential bonding 16 mm^2		M8 ring cable lug at both ends

Cable lengths	7 m, 10 m, 15 m, 20 m, 25 m, 30 m, 35 m, 50 m
Max. cable length	50 m
Number of extensions	1

For detailed specifications of the connecting cables, see (>>> *7.5 "Description of the connecting cables, KR C5" Page 213*).

4.10.2 Axis data, KR 270 R3100-2 K-F

Axis data

Motion range	
A1	±185 °
A2	-120 ° / 70 °
A3	-120 ° / 168 °
A4	±350 °
A5	±122.5 °
A6	±350 °
Speed with rated payload	
A1	105 °/s
A2	101 °/s
A3	110 °/s
A4	140 °/s
A5	113 °/s
A6	180 °/s

Direction of rotation of robot axes

The following diagram shows the direction of motion and the arrangement of the individual axes for the listed variants of this product family.

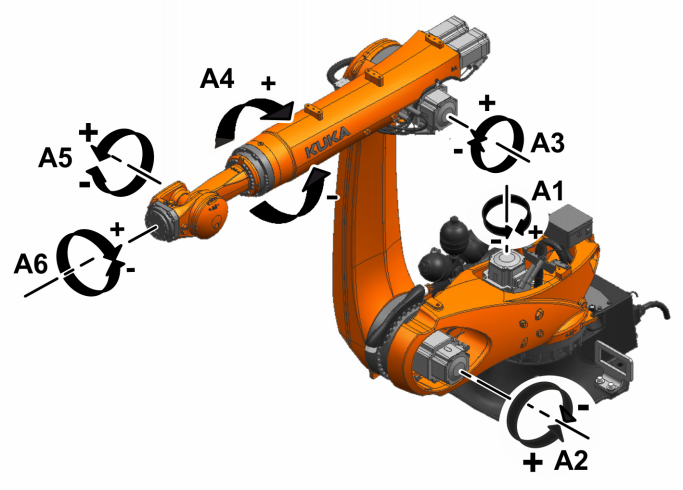

Fig. 4-81: Direction of rotation of the axes

Mastering positions

Mastering position	
A1	-25 °
A2	-100 °
A3	100 °
A4	0 °
A5	0 °
A6	0 °

Working envelope

The following diagrams show the shape and size of the working envelope for these variants of this product family.

The reference point for the working envelope is the intersection of axes 4 and 5.

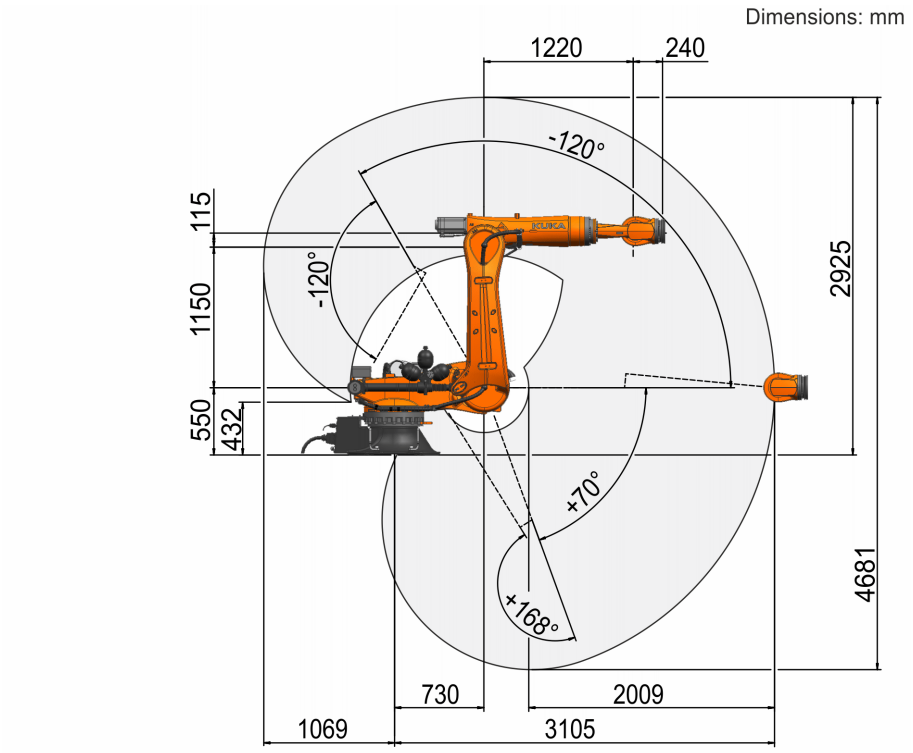

Fig. 4-82: KR 270 R3100-2 K-F, working envelope, side view

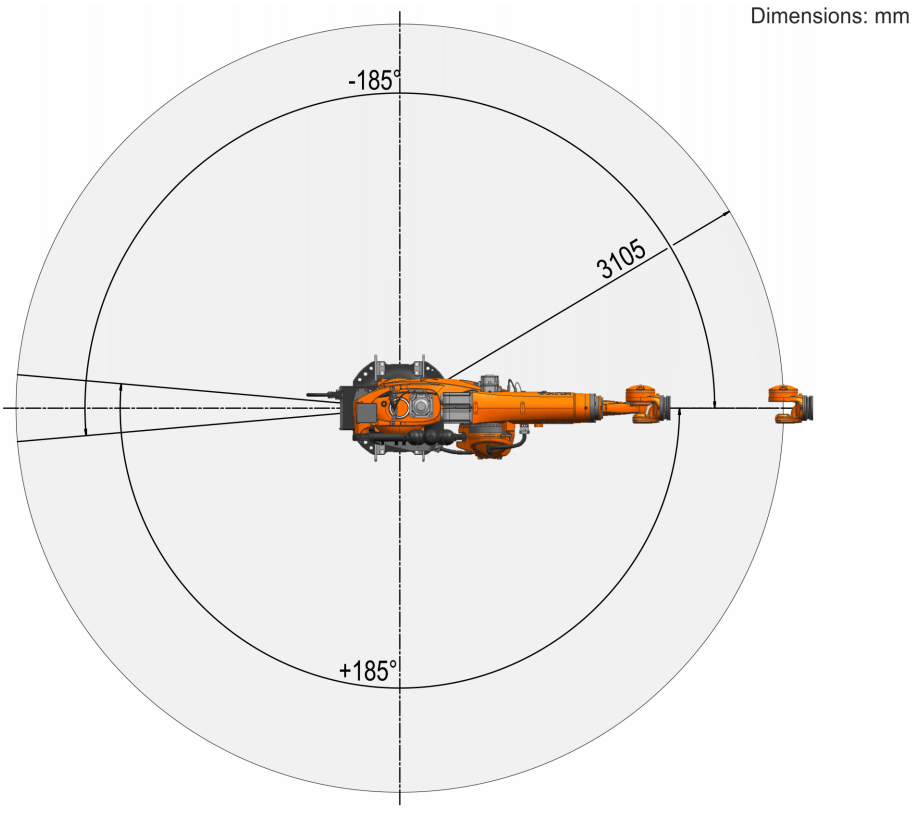

Fig. 4-83: KR 270 R3100-2 K-F, working envelope, top view

4.10.3 Payloads, KR 270 R3100-2 K-F

Payloads

Rated payload	270 kg
Maximum payload	344 kg
Rated supplementary load, base frame	0 kg
Maximum supplementary load, base frame	0 kg
Rated supplementary load, rotating column	0 kg
Maximum supplementary load, rotating column	300 kg
Rated supplementary load, link arm	0 kg
Maximum supplementary load, link arm	130 kg
Rated supplementary load, arm	50 kg
Maximum supplementary load, arm	150 kg

Load center of gravity and mass moment of inertia

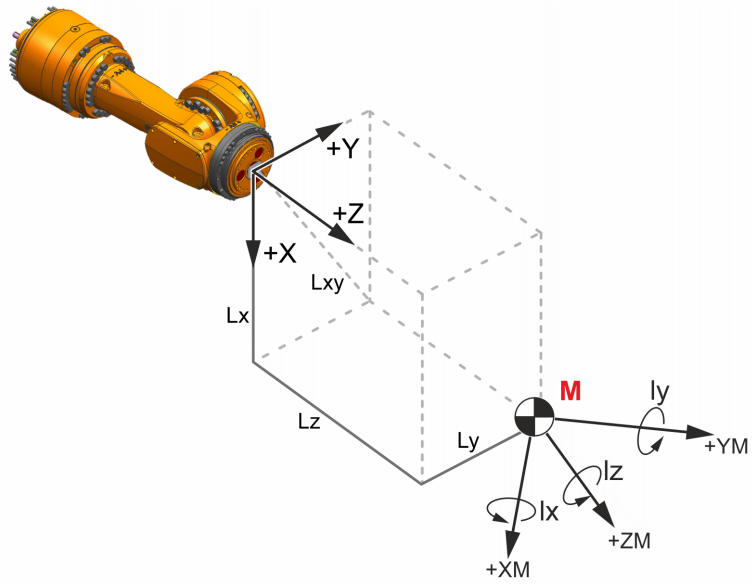

Fig. 4-84: Load center of gravity and mass moment of inertia

Parameter

Parameter/unit		Description
Mass	kg	Payload mass
L_x, L_y, L_z	mm	Position of the center of mass in the reference system

Parameter/unit		Description
A, **B**, **C**	Degrees	Orientation of the principal inertia axes • A: Rotation about the Z axis of the reference system The result is a coordinate system named CS'. • B: Rotation about the Y axis of CS' Result: CS'' • C: Rotation about the X axis of CS'' **Note:** A, B and C are not shown in the diagram.
Mass moments of inertia:		
$\mathbf{I_x}$	kgm^2	Inertia about the X axis of the main axis system
$\mathbf{I_y}$	kgm^2	Inertia about the Y axis of the main axis system
$\mathbf{I_z}$	kgm^2	Inertia about the Z axis of the main axis system

L_x, L_y, L_z and A, B, C unambiguously define the main axis system:

- The origin of the main axis system is the center of mass.
- A characteristic feature of the main axis system is that, among other things, the maximum possible inertia occurs about one of the 3 coordinate axes.

Further information is contained in the **KUKA Load** documentation.

Payload diagram

NOTICE

This loading curve corresponds to the maximum load capacity. Both values (payload and mass moment of inertia) must be checked in all cases. Exceeding this capacity will reduce the service life of the robot and overload the motors and the gears; in any such case KUKA Service must be consulted beforehand.
The values determined here are necessary for planning the robot application. For start-up of the robot, additional input data are required in accordance with the documentation for the system software.
The mass inertia must be verified using KUKA Load. It is imperative for the load data to be entered in the robot controller!

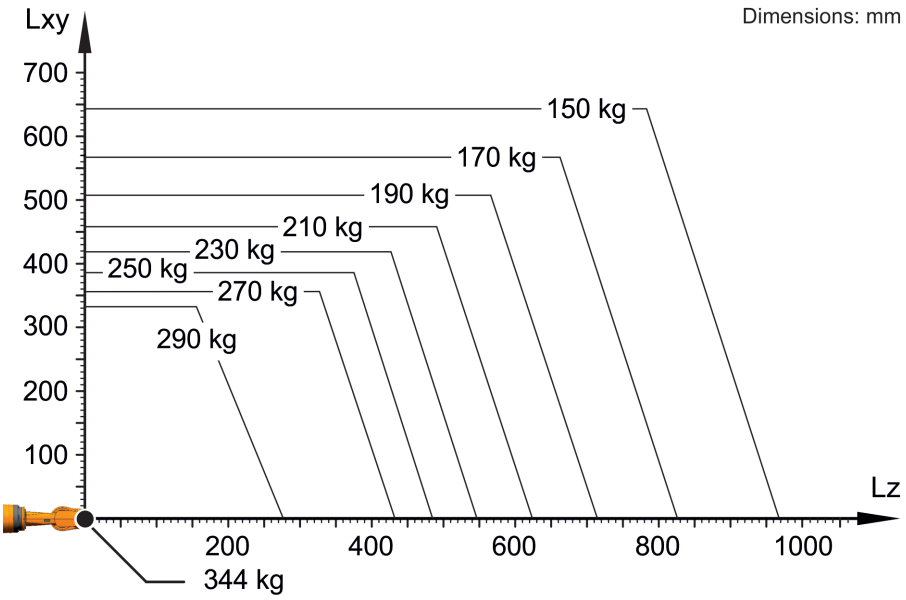

Fig. 4-85: Payload diagram, KR 270 R3100-2 K-F

The KR 270 R3100-2 K-F is designed for a rated payload of 270 kg in order to optimize the dynamic performance of the robot. With reduced load center distances and favorable supplementary loads, a maximum payload of up to 344 kg can be mounted. The specific KUKA Load case must be verified using KUKA. For further consultation, please contact KUKA Service.

Mounting flange

Robot wrist type	ZH300 F
Mounting flange standard	Deviation, see figure

Mounting flange (hole circle)	160 mm
Thread diameter	M10
Depth of engagement	min. 15 mm, max. 19 mm
Number of threads	11
Screw grade	10.9
Locating element	10 ^{H7}

The mounting flange is depicted with axes 4 and 6 in the zero position.

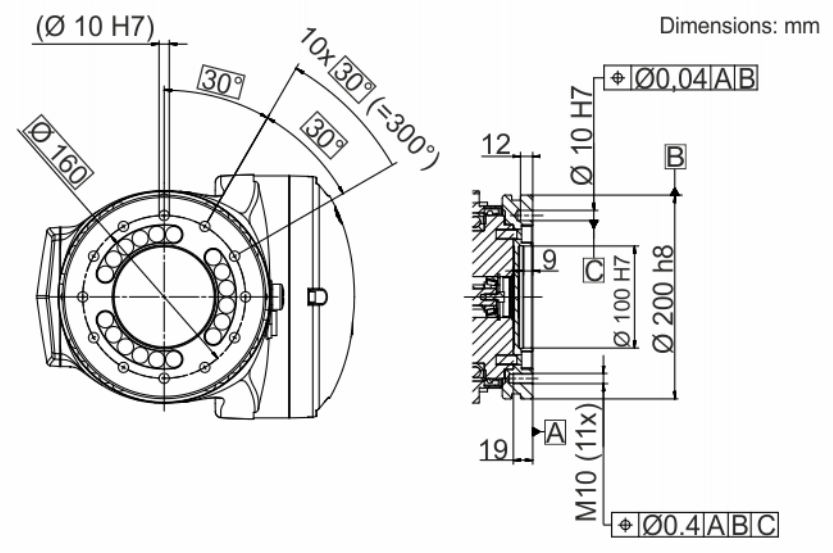

Fig. 4-86: Mounting flange D=160

Flange loads

The motion of the robot causes forces and torques to act on the mounting flange, which are transmitted to the mounted payload (e.g. tool).

The specified values refer to nominal payloads and do not include any safety factors. The actual forces and torques depend on the motion profile as well as the mass, load center of gravity and mass moment of inertia of the payload. It is imperative for the load data to be entered in the robot controller. The robot controller takes the payload into consideration during path planning.

The payload must be able to permanently withstand the forces and torques generated during normal operation.

The EMERGENCY STOP values only rarely occur during the service life of the robot (emergency situations). The frequency depends on the configuration of the system.

WARNING

Danger to life and limb due to insufficient stability of the tool
Incorrectly dimensioned tools can fracture and fail. Death, severe injuries or damage to property may result.

- Calculate the tool for each individual case, taking the load data into consideration.
- Use the specified installation equipment.

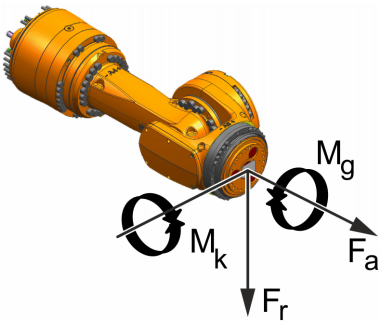

Fig. 4-87: Flange loads

Flange loads during operation	
F(a)	5500 N

F(r)	5000 N
M(k)	2800 Nm
M(g)	1700 Nm
Flange loads in the case of EMERGENCY STOP	
F(a)	8000 N
F(r)	10800 N
M(k)	6200 Nm
M(g)	5300 Nm

Axial force F(a), radial force F(r), tilting torque M(k), torque about mounting flange M(g)

Supplementary load

The robot can carry supplementary loads. When mounting the supplementary loads, be careful to observe the maximum permissible total load. The dimensions and positions of the installation options can be seen in the following diagrams.

Dimensions: mm

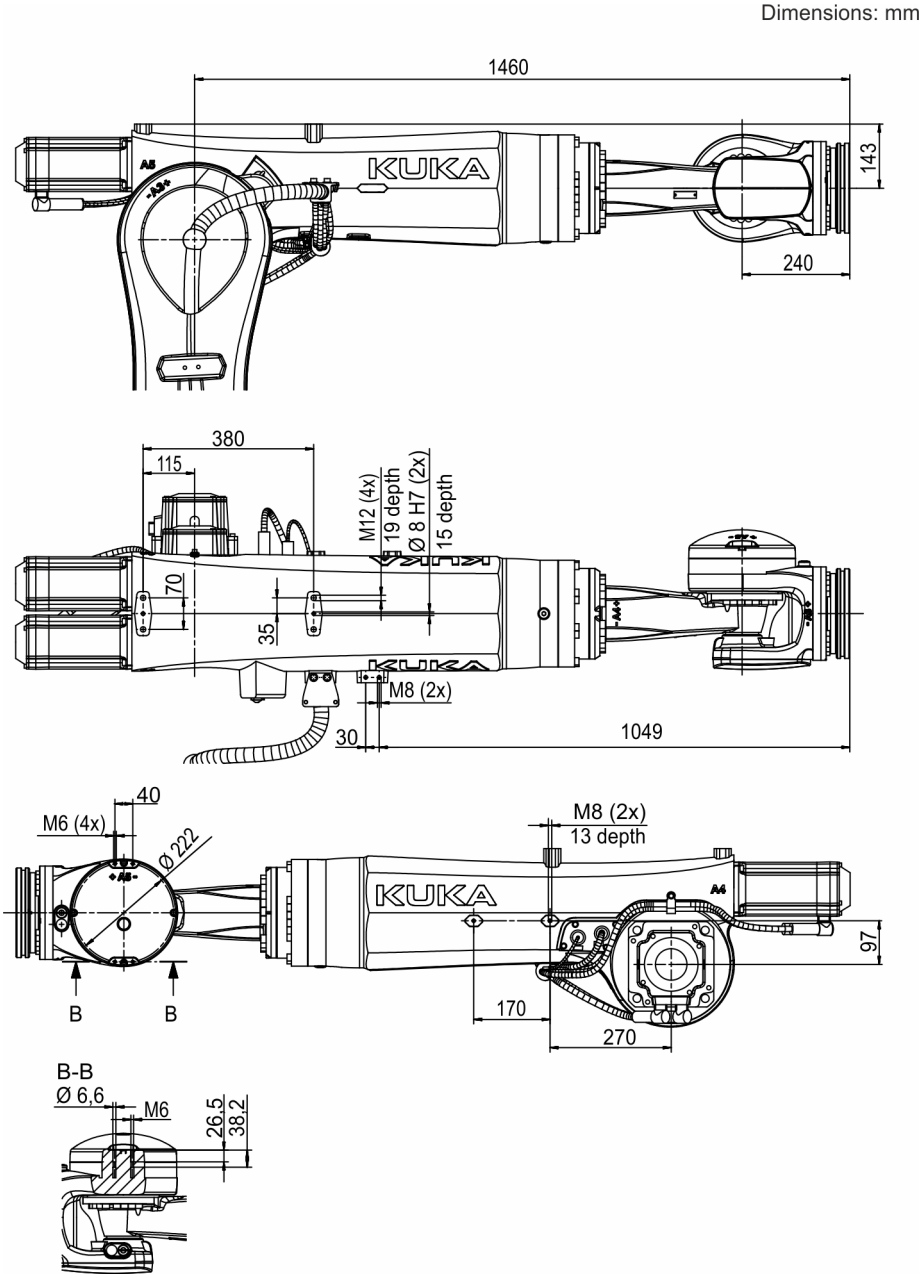

Fig. 4-88: Fastening of supplementary load, arm/in-line wrist, KR 270 R3100-2 K-F

Dimensions: mm

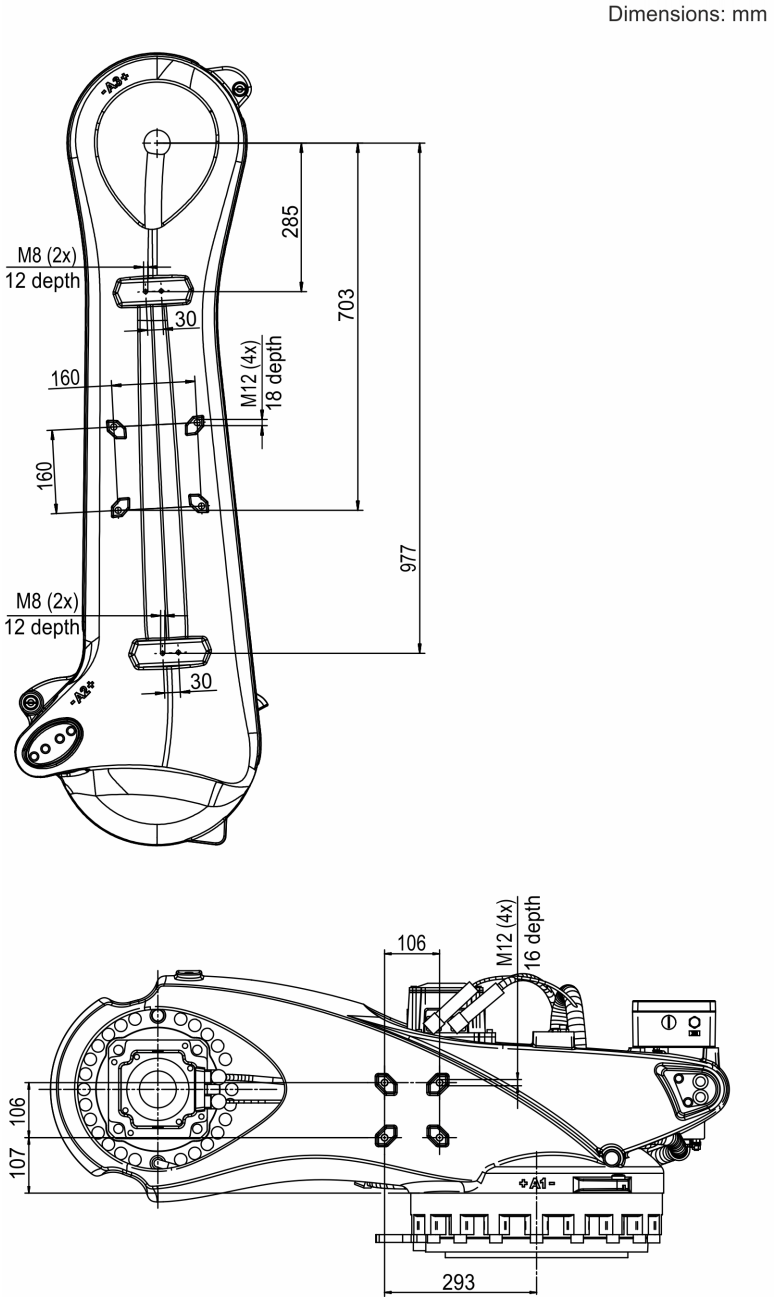

Fig. 4-89: Fastening of supplementary load on rotating column/link arm, KR 270 R3100-2 K-F

4.10.4 Foundation loads, KR 270 R3100-2 K-F

Depending on the payload (e.g. tool), supplementary load and the robot's own mass (weight), the motion of the robot generates forces and torques which are transmitted to the foundation.

The specified values refer to nominal payloads and do not include any safety factors. The actual forces and torques depend on the motion profile as well as the mass, load center of gravity and mass moment of inertia of the payload. It is imperative for the load data to be entered in the robot controller. The robot controller takes the payload into consideration during path planning.

Supplementary loads on A1 (rotating column) and A2 (link arm) are not taken into consideration in the calculation of the foundation load. These must be taken into account in the vertical force (F_v).

The foundation must be able to permanently withstand the forces and torques generated during normal operation.

The EMERGENCY STOP values only rarely occur during the service life of the robot (emergency situations). The frequency depends on the configuration of the system.

WARNING

Danger to life and limb due to insufficient stability of the foundation

An incorrectly dimensioned foundation can fracture and fail. Death, severe injuries or damage to property may result.

- Calculate the foundation loads for each individual case.
- Use the specified installation equipment.

Vertical force F(v)	
F(v normal)	21100 N
F(v max)	25700 N
Horizontal force F(h)	
F(h normal)	8200 N
F(h max)	19900 N
Tilting moment M(k)	
M(k normal)	28000 Nm
M(k max)	44300 Nm
Torque about axis 1 M(r)	
M(r normal)	11300 Nm
M(r max)	18600 Nm

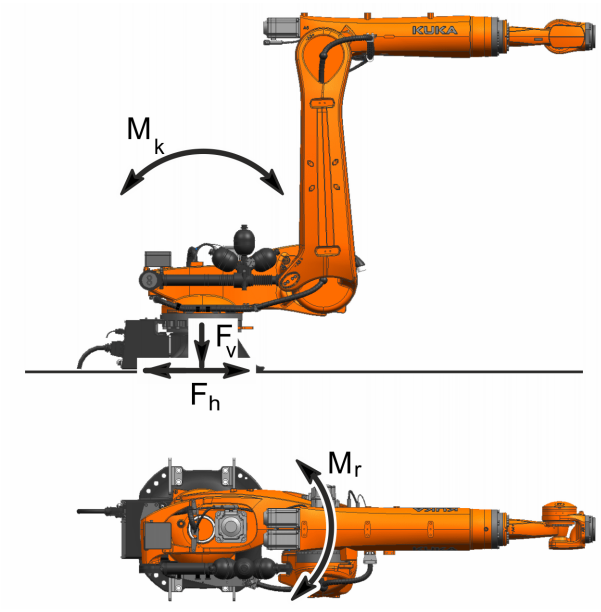

Fig. 4-90: Foundation loads

4.11 Plates and labels

Plates and labels

The following plates and labels (>>> *Fig. 4-91*) are attached to the robot. They must not be removed or rendered illegible. Illegible plates and labels must be replaced.

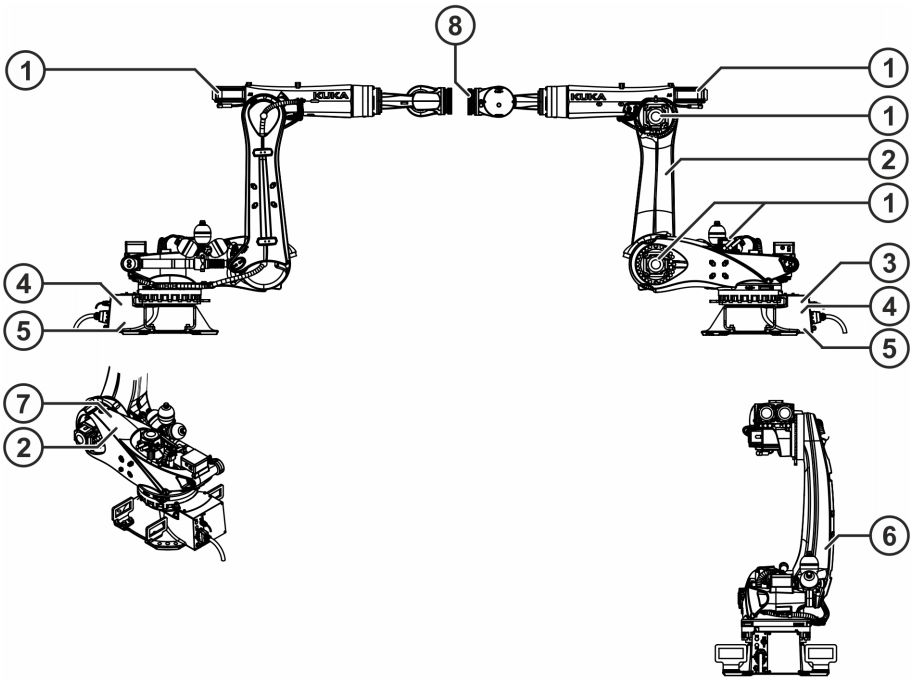

Fig. 4-91: Location of plates and labels

Item	Description
1	 **Hot surface** During operation of the robot, surface temperatures may be reached that could result in burn injuries. Protective gloves must be worn!

2

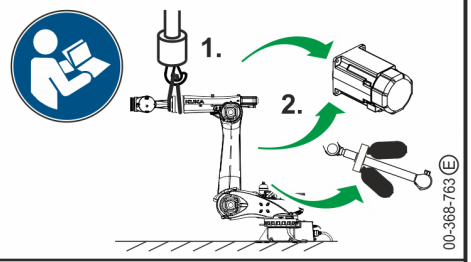

⚠CAUTION	Before removing the motor or counter-balancing system, secure robot axis to prevent it from moving!
⚠ ATTENTION	Avant de retirer le moteur ou le système d'équilibrage, protéger l'axe du robot pour éviter tout mouvement!
⚠VORSICHT	Vor Entfernen des Motors oder des Gewichtsausgleichs, Roboterachse gegen Bewegungen sichern!

Secure the axes
Before exchanging any motor, secure the corresponding axis through safeguarding by suitable means/devices to protect against possible movement. The axis can move. Risk of crushing!

3

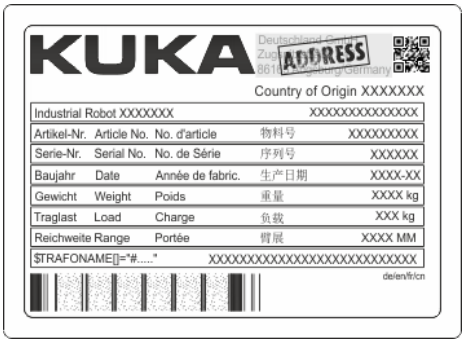

Identification plate example
Content according to Machinery Directive.

The QR code contains a link to product information in KUKA Xpert.

4

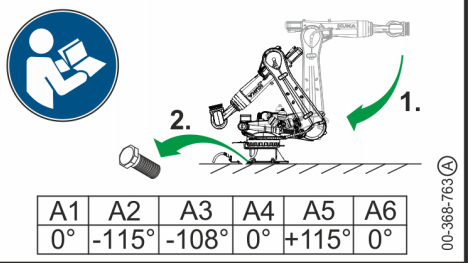

⚠ CAUTION	Move the robot into its transport position before removing the mounting base!
⚠ ATTENTION	Amener le robot en position de transport avant de défaire la fixation aux fondations!
⚠VORSICHT	Roboter vor Lösen der Fundamentbefestigung in Transportstellung bringen!

Transport position
Before loosening the bolts of the mounting base, the robot must be in the transport position as indicated in the table. Risk of toppling!

5	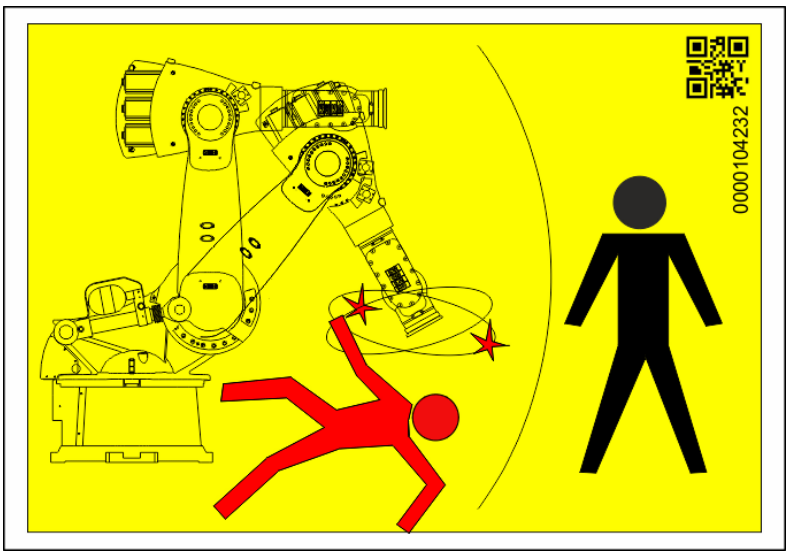 **Danger zone** Entering the danger zone of the robot is prohibited if the robot is in operation or ready for operation. Risk of injury!
6	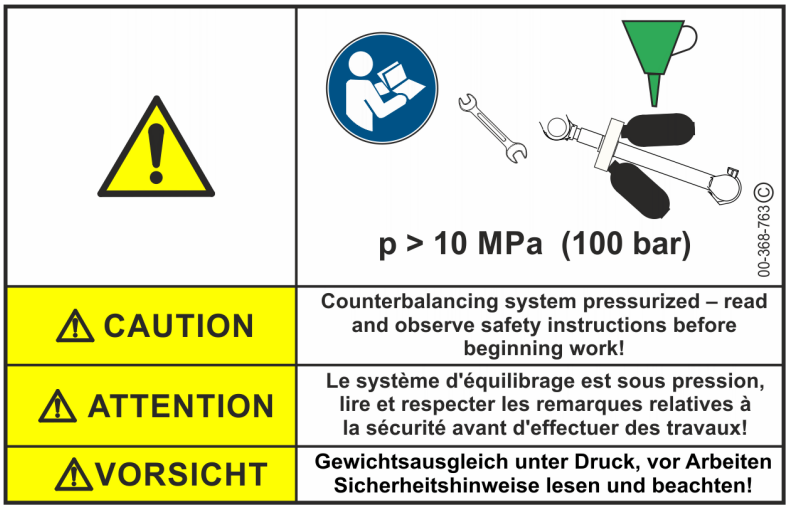 **Counterbalancing system** The system is pressurized with oil and nitrogen. Read and follow the assembly and operating instructions before commencing work on the counterbalancing system. Risk of injury!

7	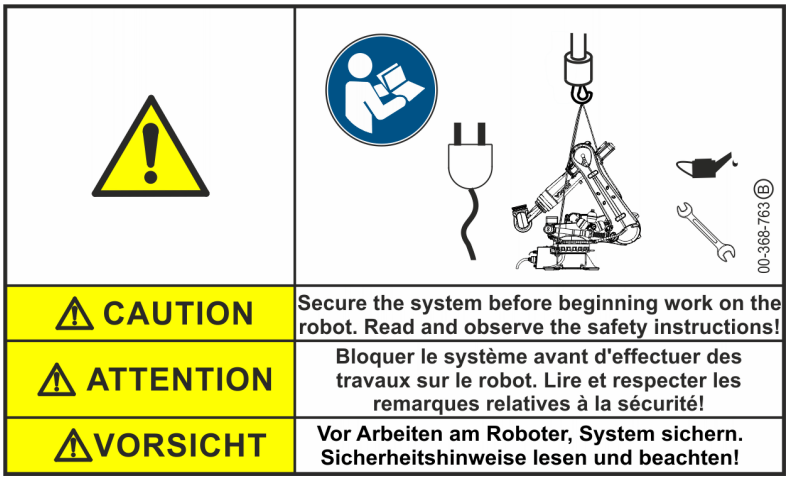 **Work on the robot** Before start-up, transportation or maintenance, read and follow the assembly and operating instructions.
8	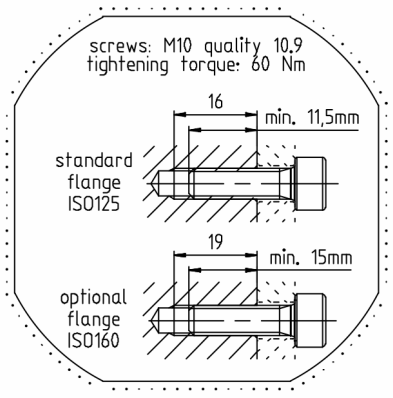 **Mounting flange on in-line wrist type IW210** The values specified on this plate apply for the installation of tools on the mounting flange of the wrist and must be observed. 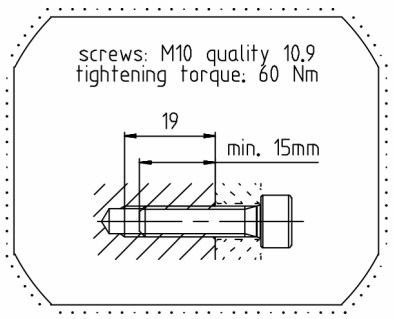 **Mounting flange on in-line wrist type IW300** The values specified on this plate apply for the installation of tools on the mounting flange of the wrist and must be observed.

4.12 REACH duty to communicate information acc. to Art. 33

As of June 2007, the Regulation (EC) 1907/2006 of the European Parliament and of the Council dated 18 December 2006 on the registration, evaluation and authorization of chemicals (REACH Regulation) is in force.

Detailed REACH information can be found in the product information in KUKA Xpert.

4.13 Stopping distances and times

4.13.1 General information

Information concerning the data:

- The data are given for the main axes A1, A2 and A3. The main axes are the axes with the greatest deflection.
- Superposed axis motions can result in longer stopping distances.
- Stopping distances and stopping times in accordance with DIN EN ISO 10218-1, Annex B.
- Stop categories:
  - Stop category 0 » STOP 0
  - Stop category 1 » STOP 1

    according to IEC 60204-1
- The values specified for Stop 0 are guide values determined by means of tests and simulation. They are average values which conform to the requirements of DIN EN ISO 10218-1. The actual stopping distances and stopping times may differ due to internal and external influences on the braking torque. It is therefore advisable to determine the exact stopping distances and stopping times where necessary under the real conditions of the actual robot application.
- Measurement method

  The stopping distances were measured using the robot-internal measurement method.
- The wear on the brakes varies depending on the operating mode, robot application and the number of STOP 0 stops triggered. It is therefore advisable to check the stopping distance at least once a year.

Determination of stopping distances and times with KR C4

- The stopping distance is the angle traveled by the robot from the moment the stop signal is triggered until the robot comes to a complete standstill.
- The stopping time is the time that elapses from the moment the stop signal is triggered until the robot comes to a complete standstill.

Measurement method for determining the STOP 0 stopping distances and stopping times according to ISO 10218-1 with KR C5

Motion sequence

- Measurement with single-axis motion (A1, A2 and A3 respectively)
- Axes that are not moved are positioned in such a way that the maximum distance of the load center of gravity from the moved axis is reached.
- Use the maximum motion radius of the axis to achieve as high a velocity as possible.
- Trigger point at maximum velocity

Measurement method

1. A **safe operational stop** is activated at the trigger point; this causes a STOP 0 to be triggered if the robot is moving.

   Start recording with trace functionality.
2. Brakes are closed.

Brake closes (WDI motor status bit 2) is used as the start time of the measurement.

3. The axis comes to a standstill.

   Standstill is used as the end time of the measurement.

As an approximation, it is also possible to carry out the measurement by means of a STOPMESS interrupt program in which the stopping distance results from the difference between the position at the trigger point ($AXIS_INT) and the position at standstill.

Information concerning the data

- The stopping distance is the angle covered by the axis from the **Brake closes** signal (WDI motor status bit 2) to complete standstill.
- The stopping time is the time that elapses from the **Brake closes** signal (WDI motor status bit 2) until the robot comes to a complete standstill.

4.13.2 Stopping distances and times, KR 120 R3500-2 P and KR 120 R3500-2 P-C

4.13.2.1 Stopping distances and stopping times, STOP 0, A1 to A3

The values for stop category 0 when a STOP 0 is triggered refer to the following configuration:

- Extension I = 100%
- Program override POV = 100%
- Mass m = rated payload

Stopping distance	
A1	25.66 °
A2	24.64 °
A3	19.09 °
Stopping time	
A1	0.70 s
A2	0.52 s
A3	0.35 s

4.13.2.2 Stopping distances and stopping times, STOP 1, A1

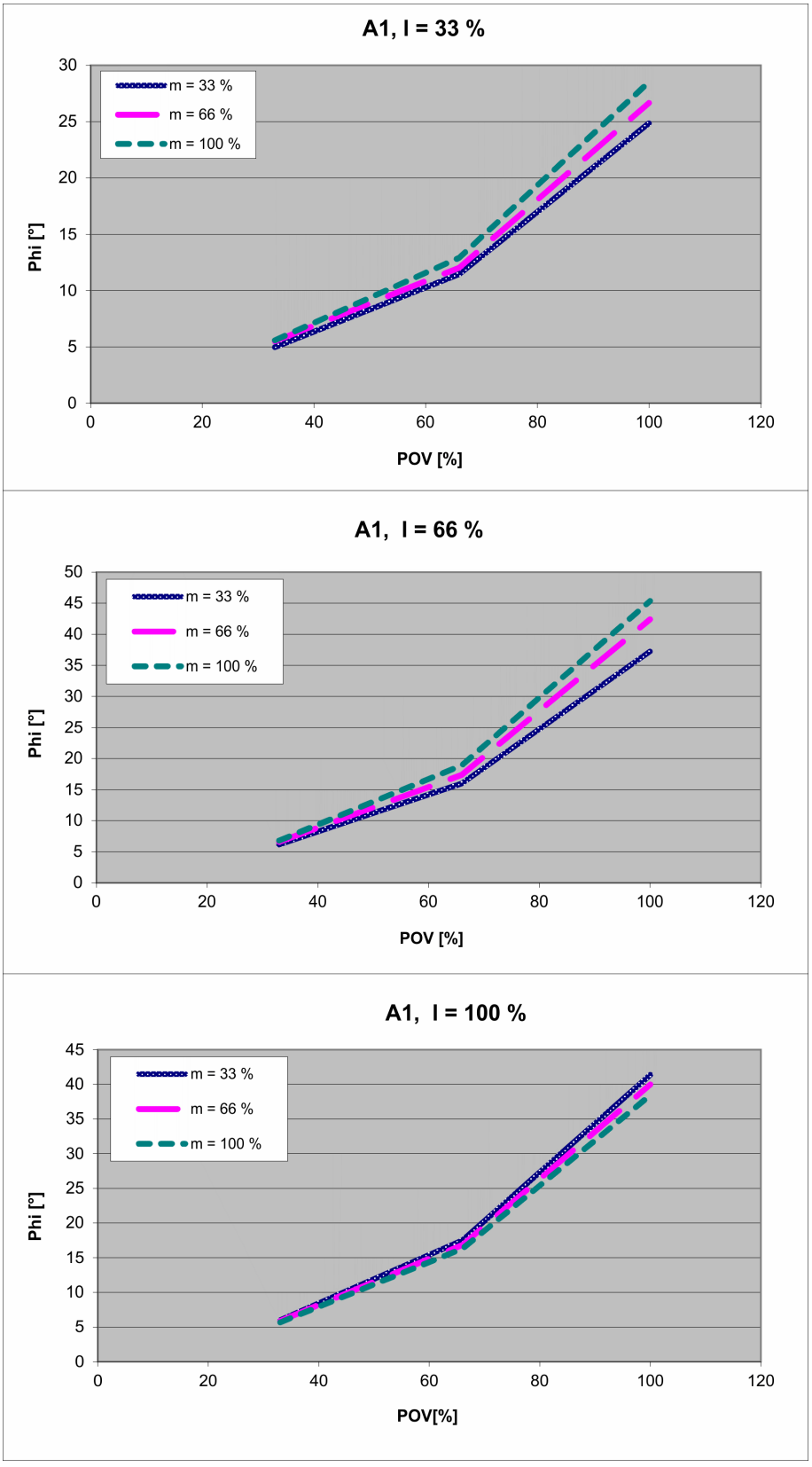

Fig. 4-92: Stopping distances for STOP 1, axis 1

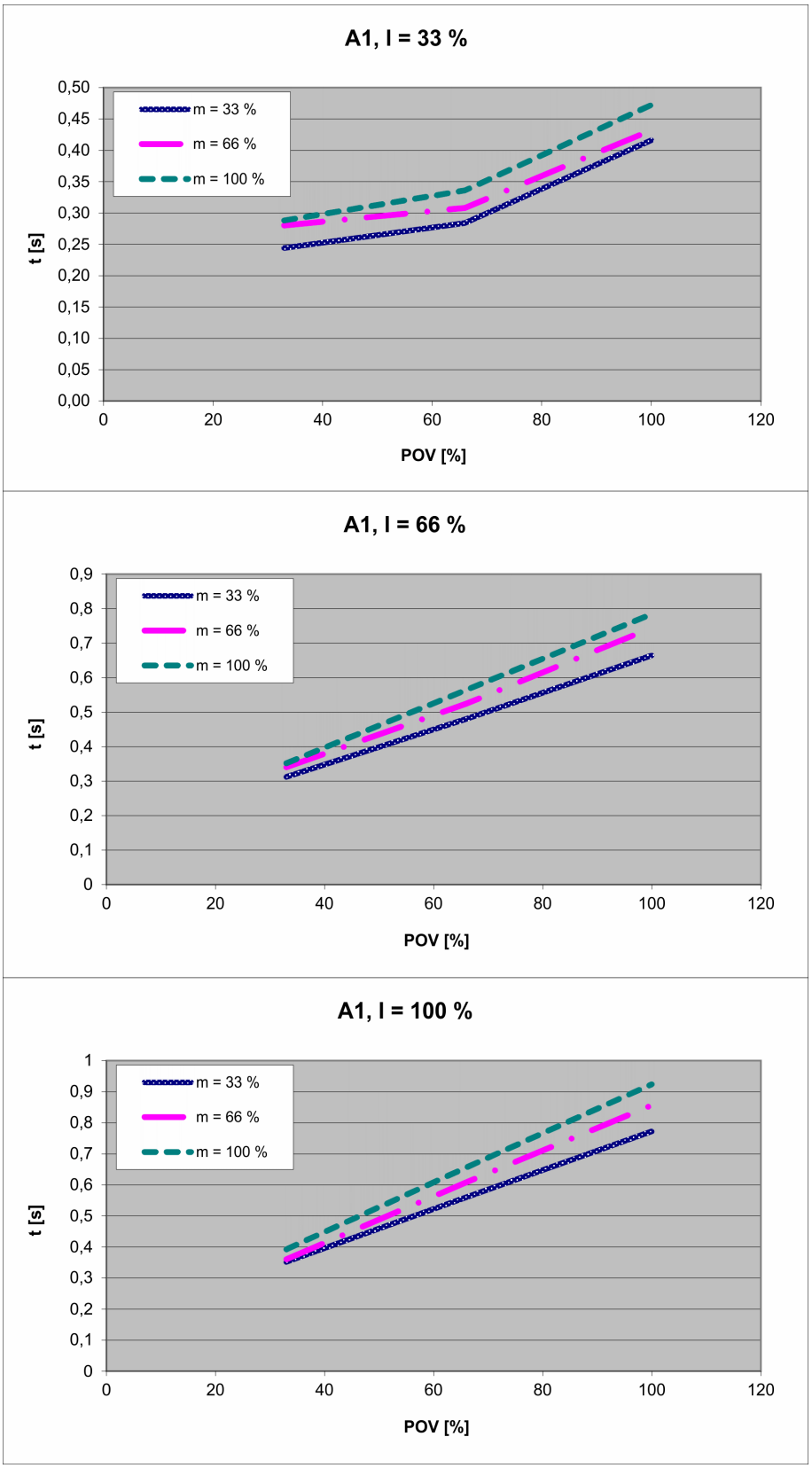

Fig. 4-93: Stopping times for STOP 1, axis 1

4.13.2.3 Stopping distances and stopping times, STOP 1, A2

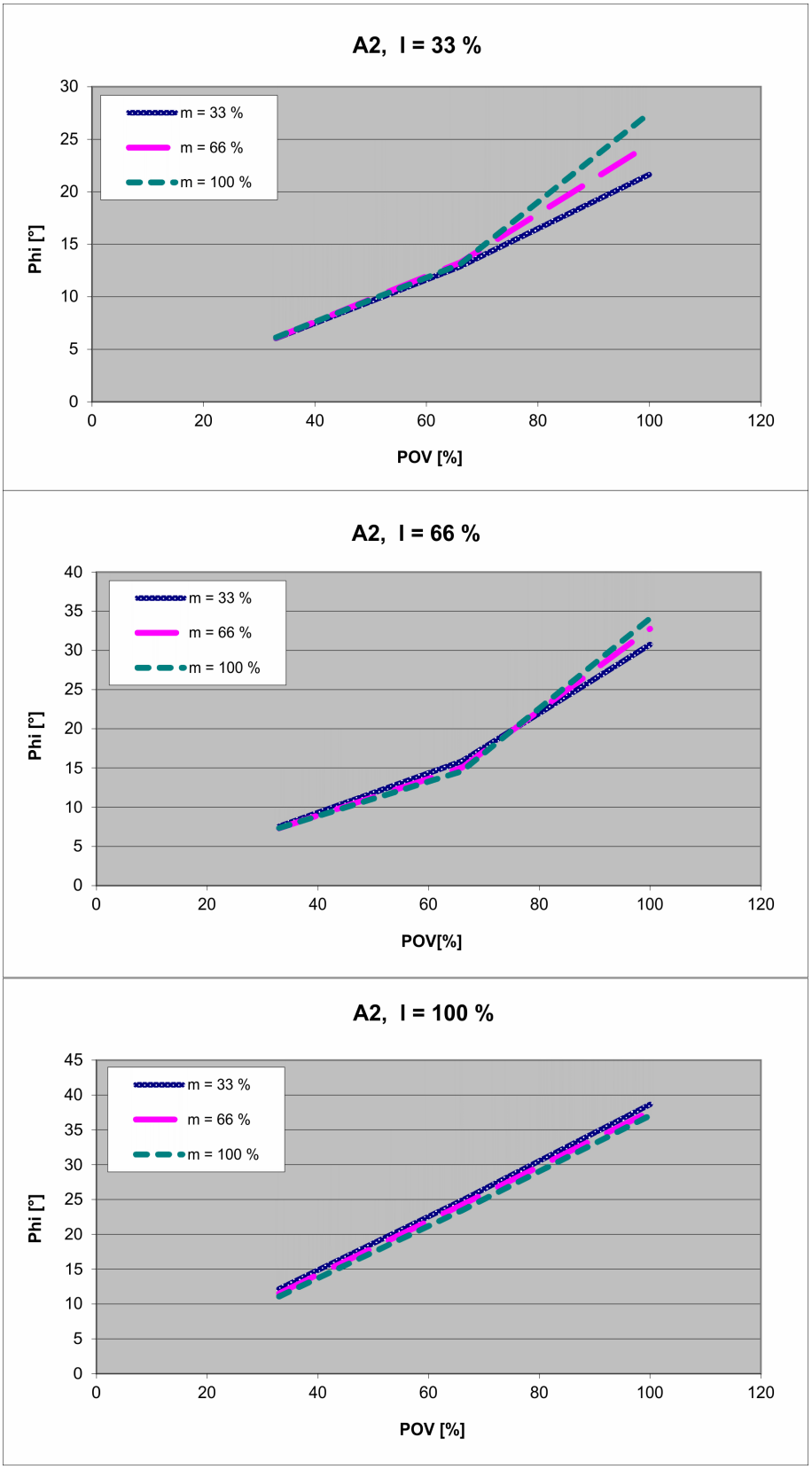

Fig. 4-94: Stopping distances for STOP 1, axis 2

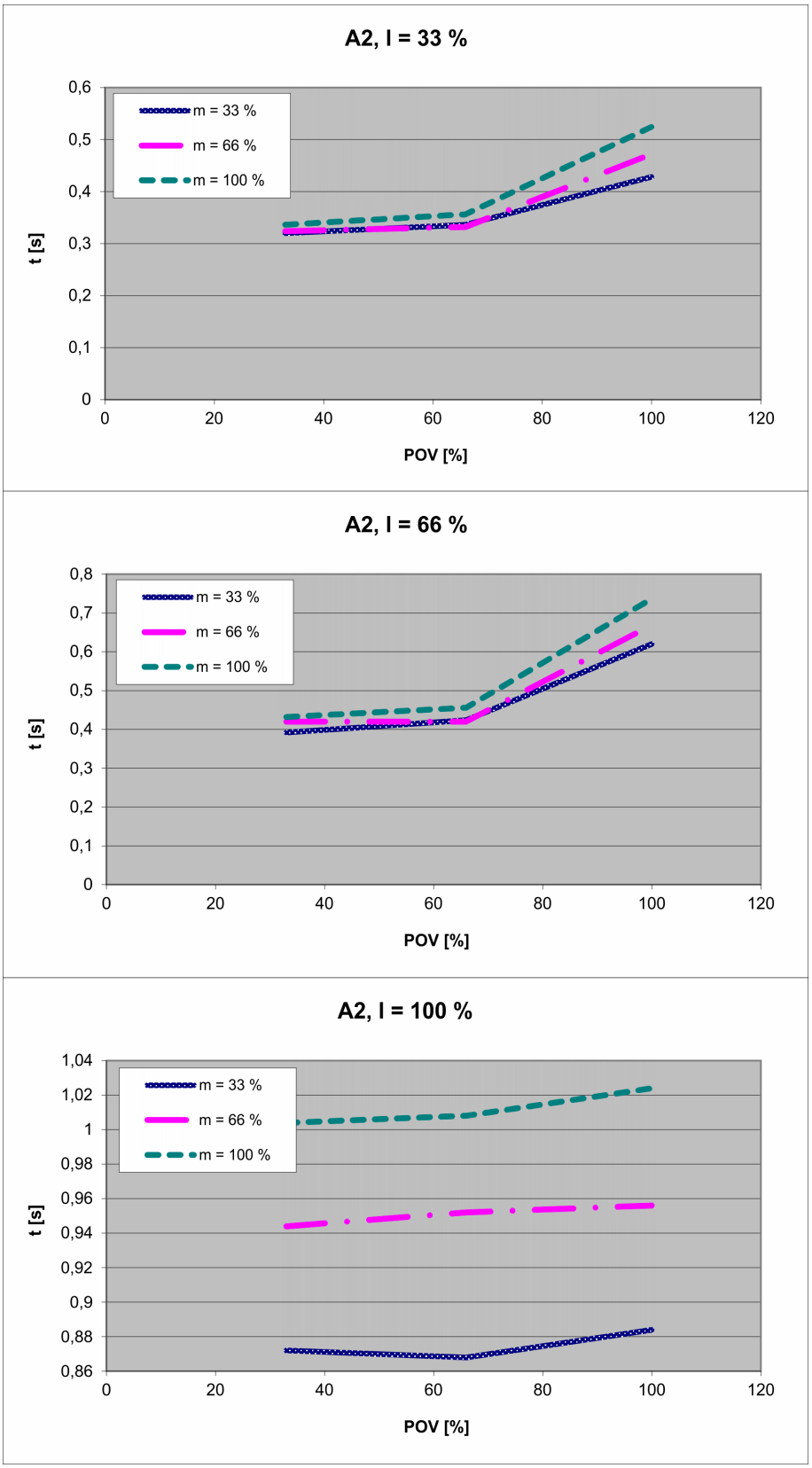

Fig. 4-95: Stopping times for STOP 1, axis 2

4.13.2.4 Stopping distances and stopping times, STOP 1, A3

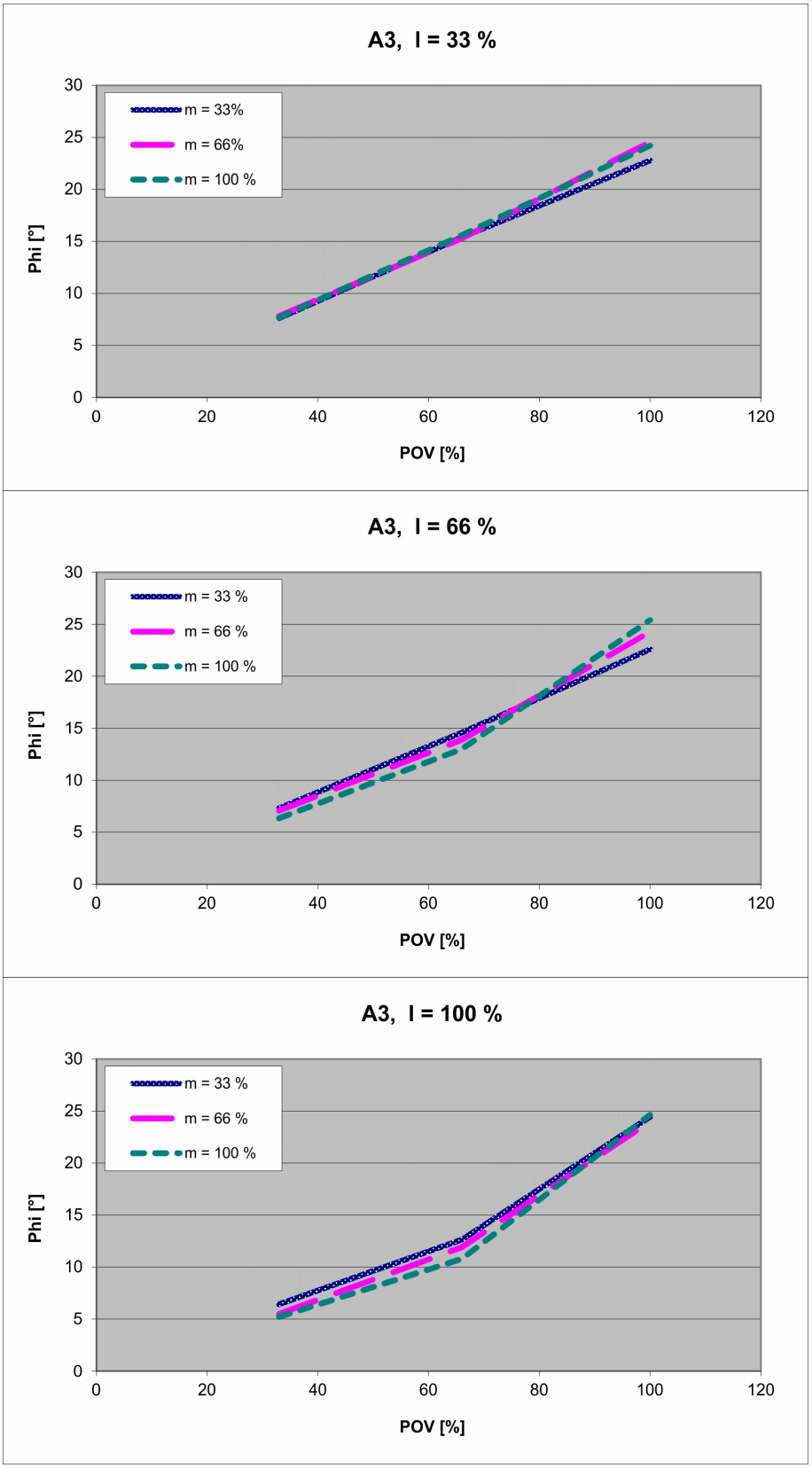

Fig. 4-96: Stopping distances for STOP 1, axis 3

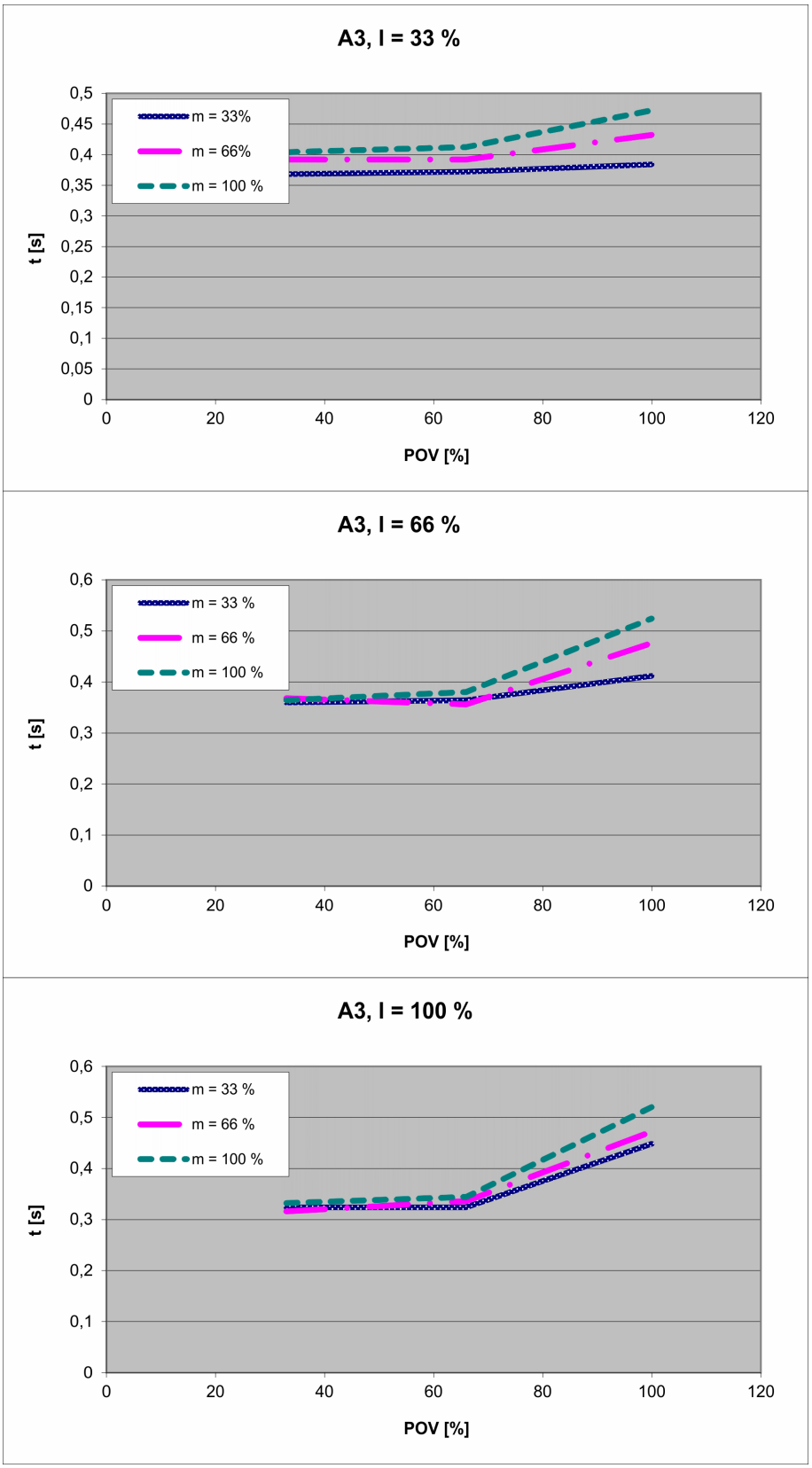

Fig. 4-97: Stopping times for STOP 1, axis 3

4.13.3 Stopping distances and times, KR 120 R3900-2 K

4.13.3.1 Stopping distances and stopping times, STOP 0, A1 to A3

The values for stop category 0 when a STOP 0 is triggered refer to the following configuration:

- Extension I = 100%
- Program override POV = 100%
- Mass m = rated payload

Stopping distance	
A1	31.78 °
A2	19.28 °
A3	18.44 °
Stopping time	
A1	0.68 s
A2	0.68 s
A3	0.61 s

4.13.3.2 Stopping distances and stopping times, STOP 1, A1

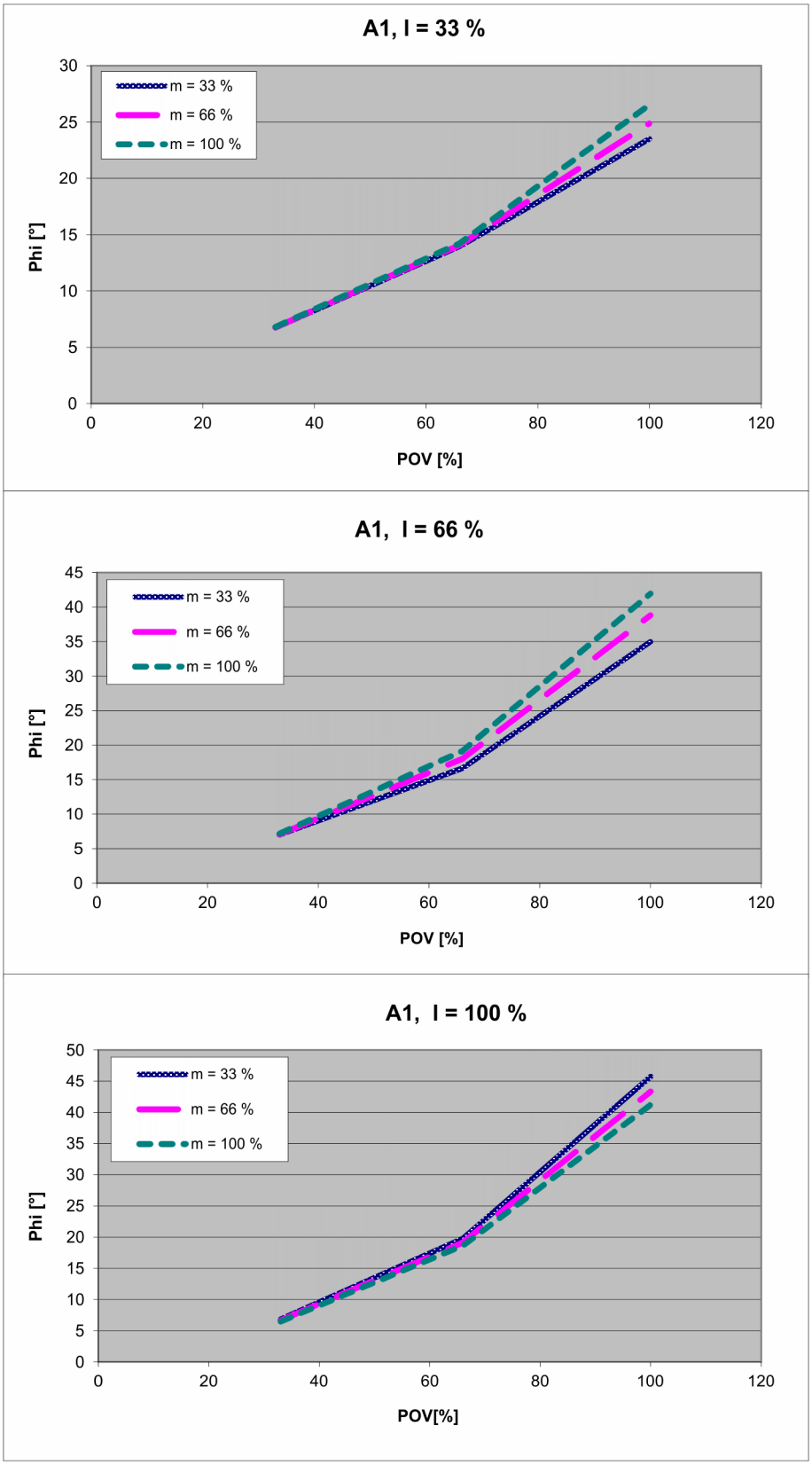

Fig. 4-98: Stopping distances for STOP 1, axis 1

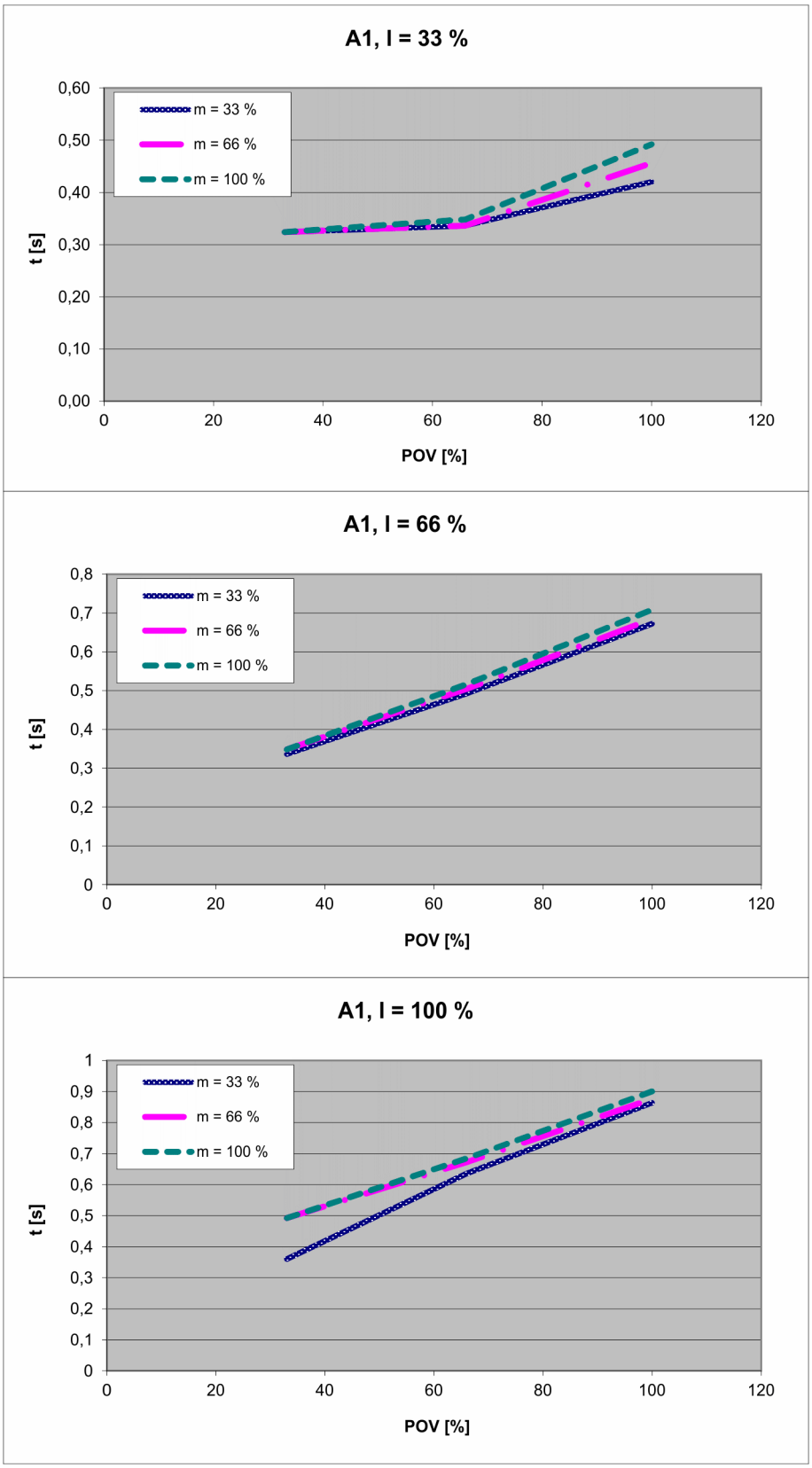

Fig. 4-99: Stopping times for STOP 1, axis 1

4.13.3.3 Stopping distances and stopping times, STOP 1, A2

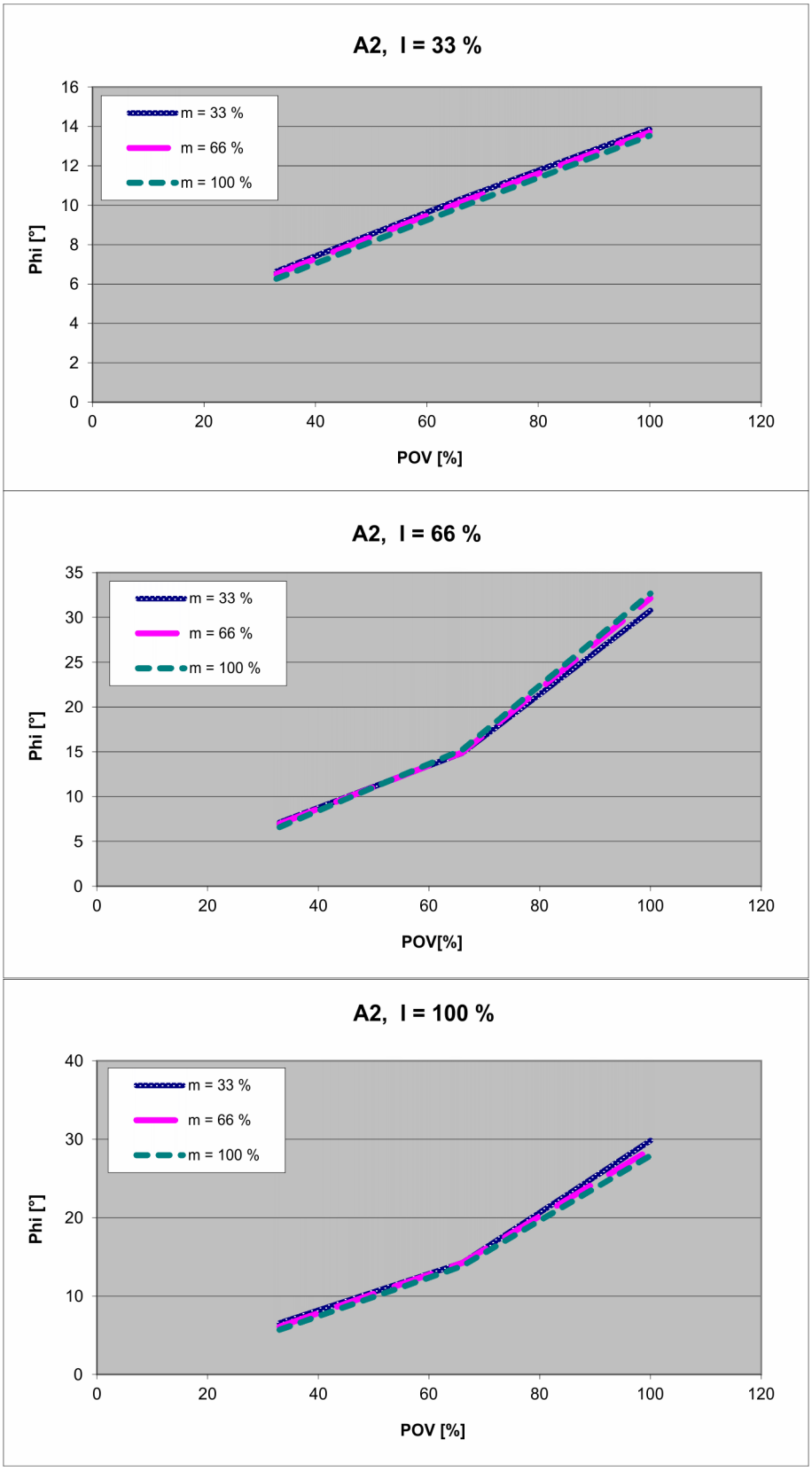

Fig. 4-100: Stopping distances for STOP 1, axis 2

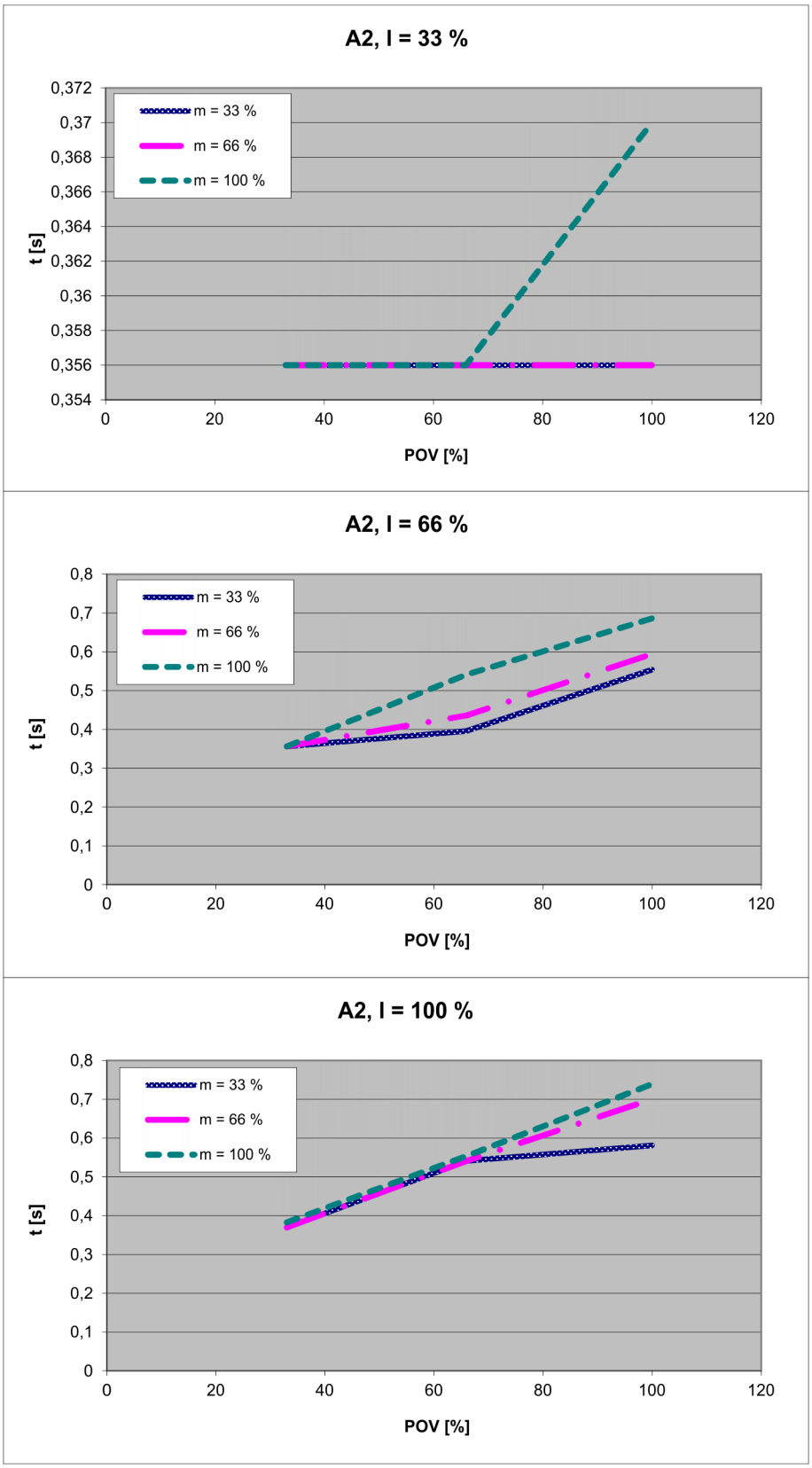

Fig. 4-101: Stopping times for STOP 1, axis 2

4.13.3.4 Stopping distances and stopping times, STOP 1, A3

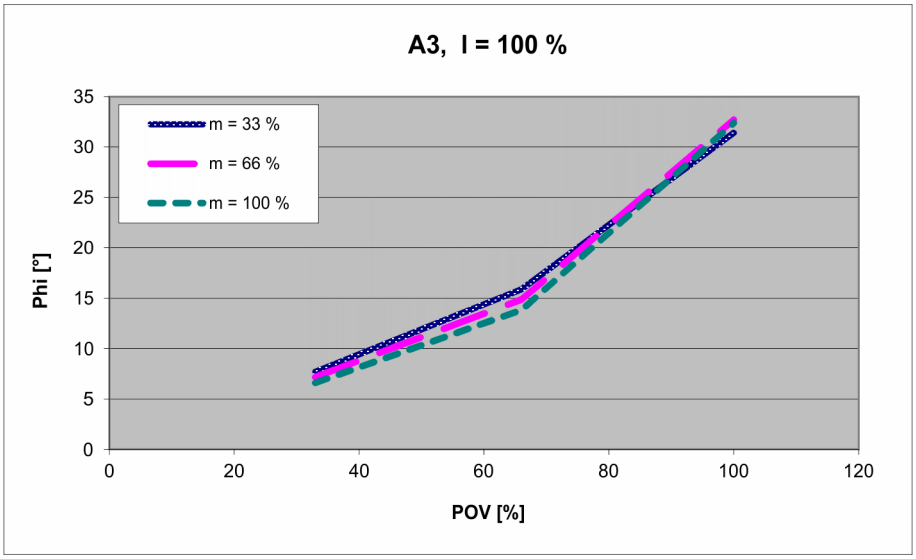

Fig. 4-102: Stopping distances for STOP 1, axis 3

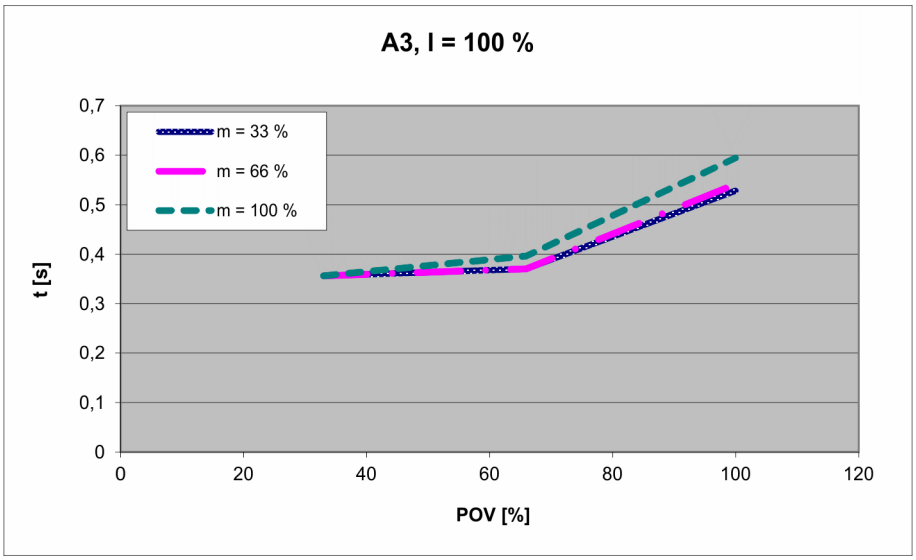

Fig. 4-103: Stopping times for STOP 1, axis 3

4.13.4 Stopping distances and times, KR 180 R3500-2 K and KR 180 R3500-2 K-F

4.13.4.1 Stopping distances and stopping times, STOP 0, A1 to A3

The values for stop category 0 when a STOP 0 is triggered refer to the following configuration:

- Extension I = 100%
- Program override POV = 100%
- Mass m = rated payload

Stopping distance	
A1	33.80 °
A2	26.00 °

A3	18.85 °
Stopping time	
A1	0.75 s
A2	0.64 s
A3	0.58 s

4.13.4.2 Stopping distances and stopping times, STOP 1, A1

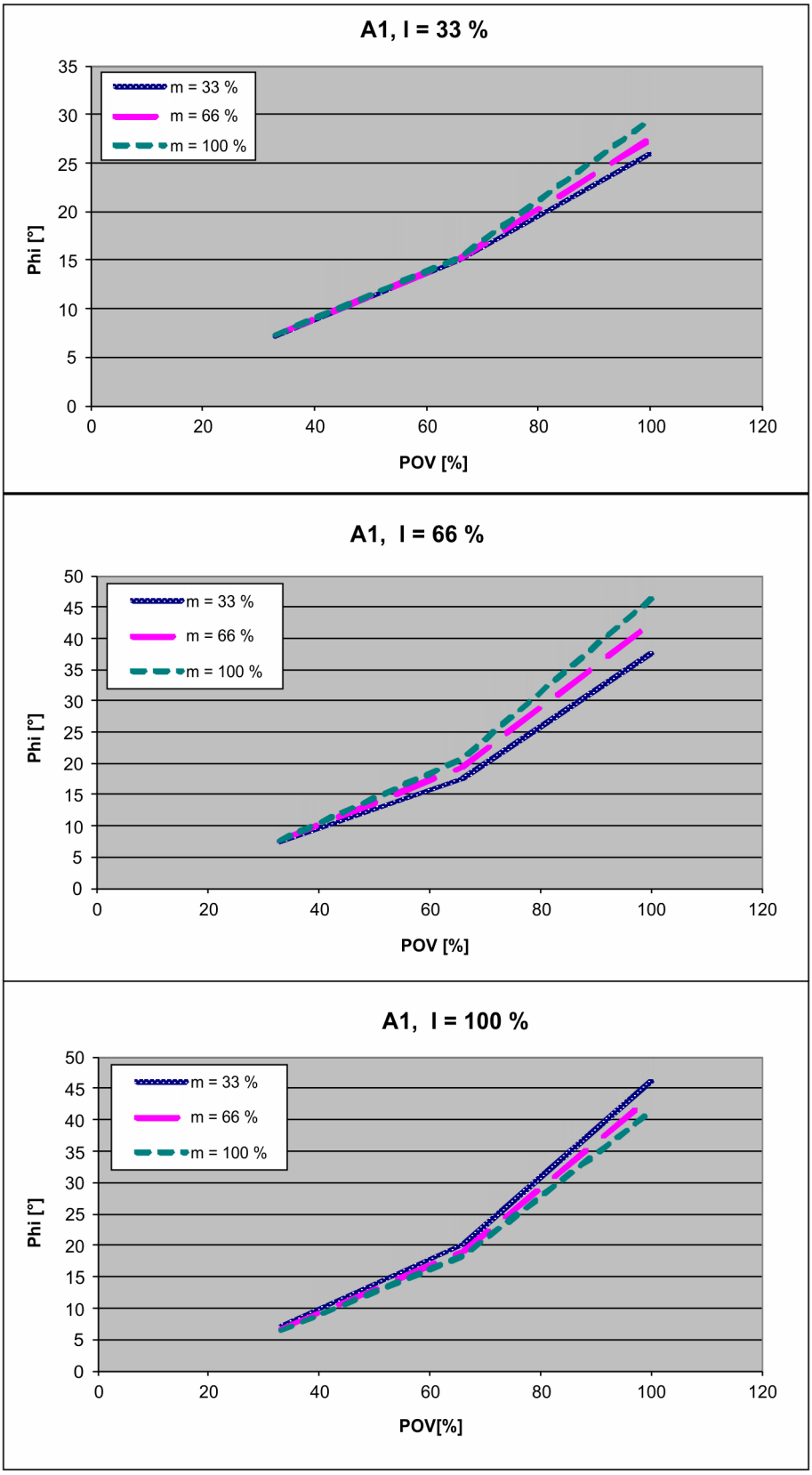

Fig. 4-104: Stopping distances for STOP 1, axis 1

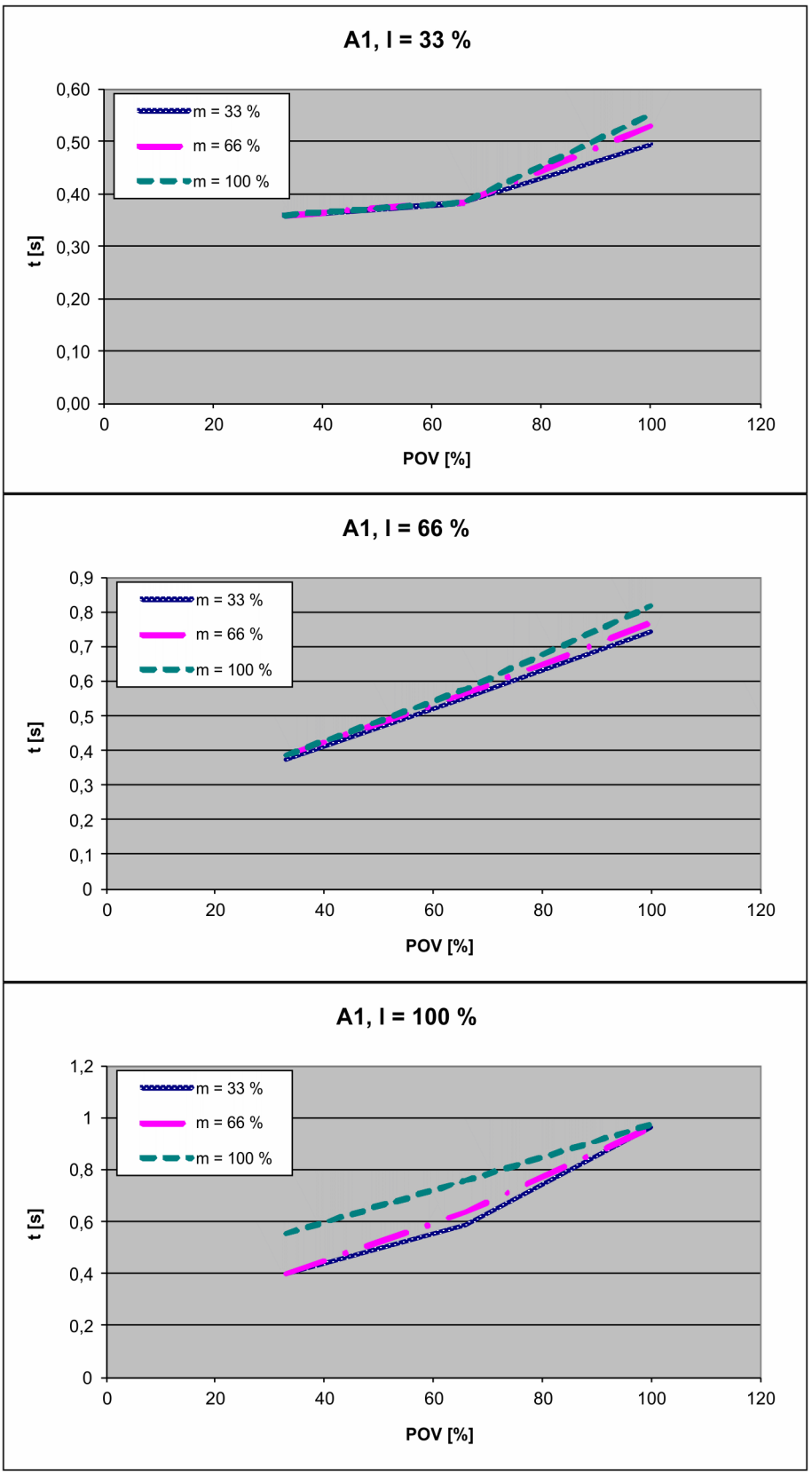

Fig. 4-105: Stopping times for STOP 1, axis 1

4.13.4.3 Stopping distances and stopping times, STOP 1, A2

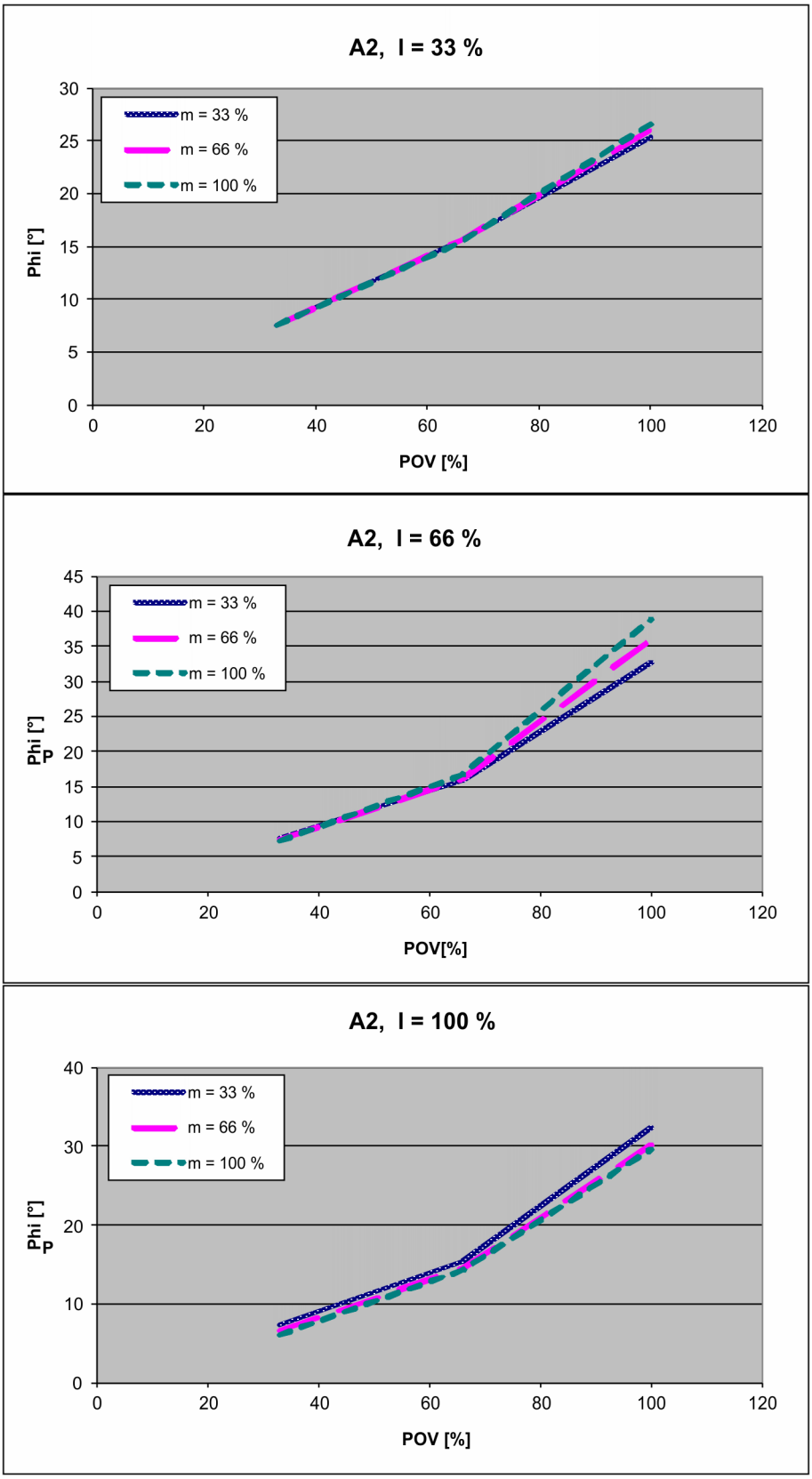

Fig. 4-106: Stopping distances for STOP 1, axis 2

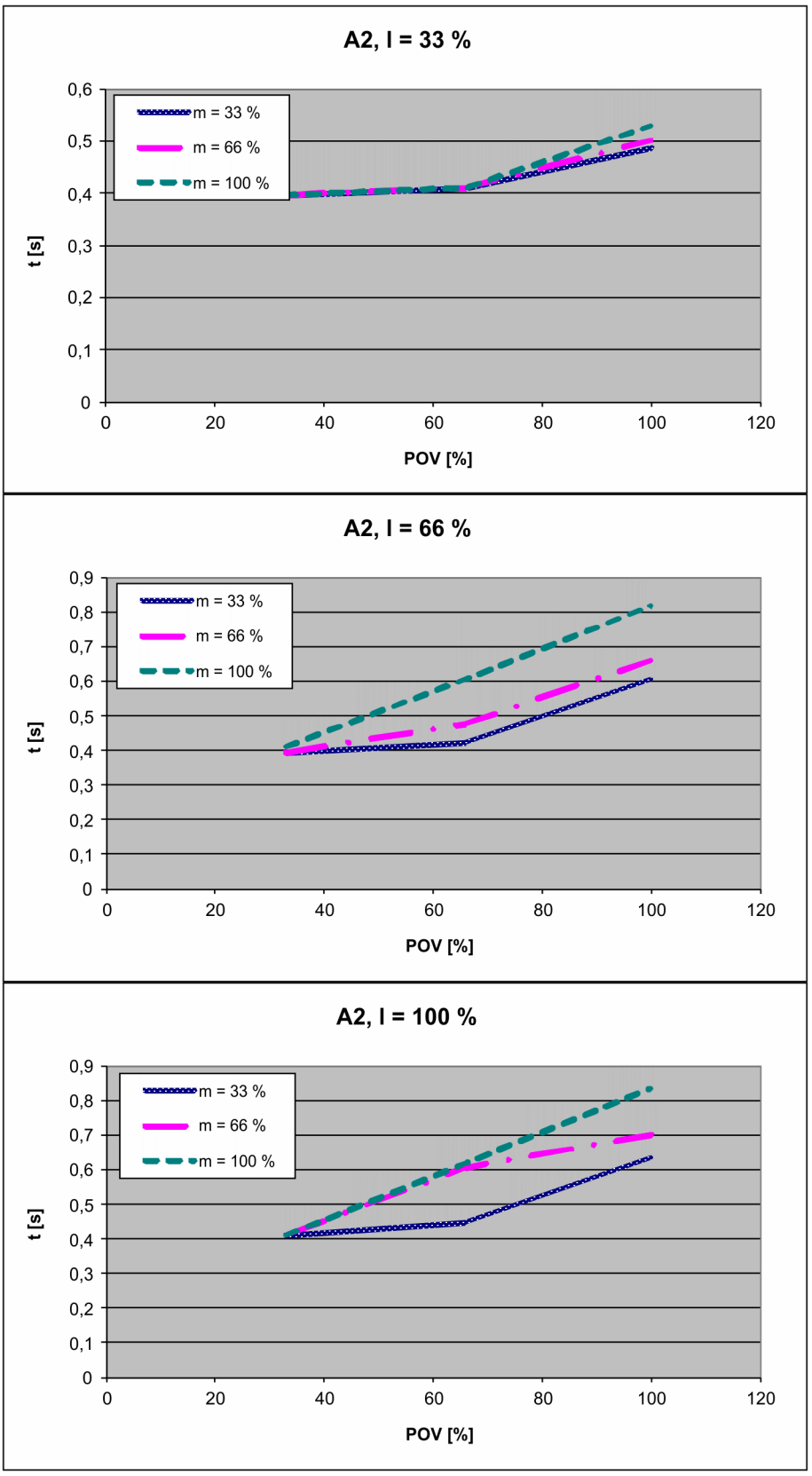

Fig. 4-107: Stopping times for STOP 1, axis 2

4.13.4.4 Stopping distances and stopping times, STOP 1, A3

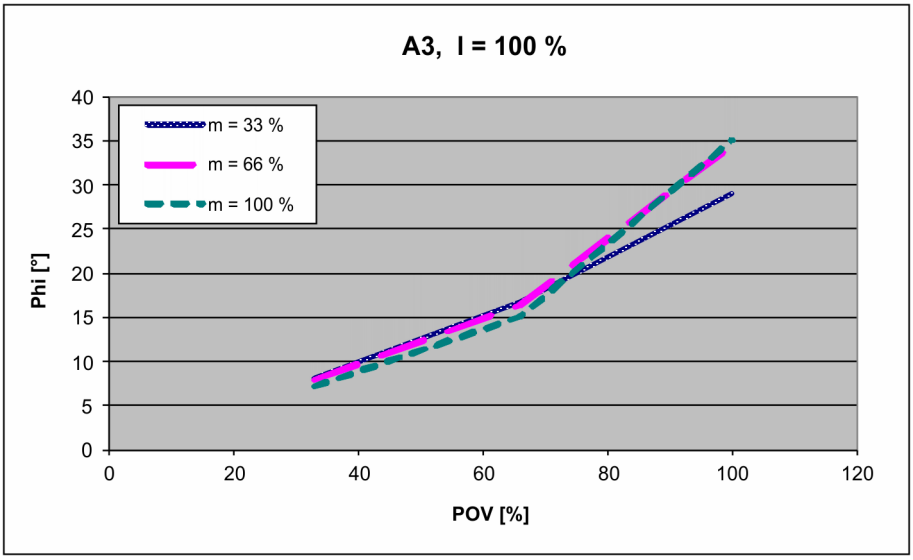

Fig. 4-108: Stopping distances for STOP 1, axis 3

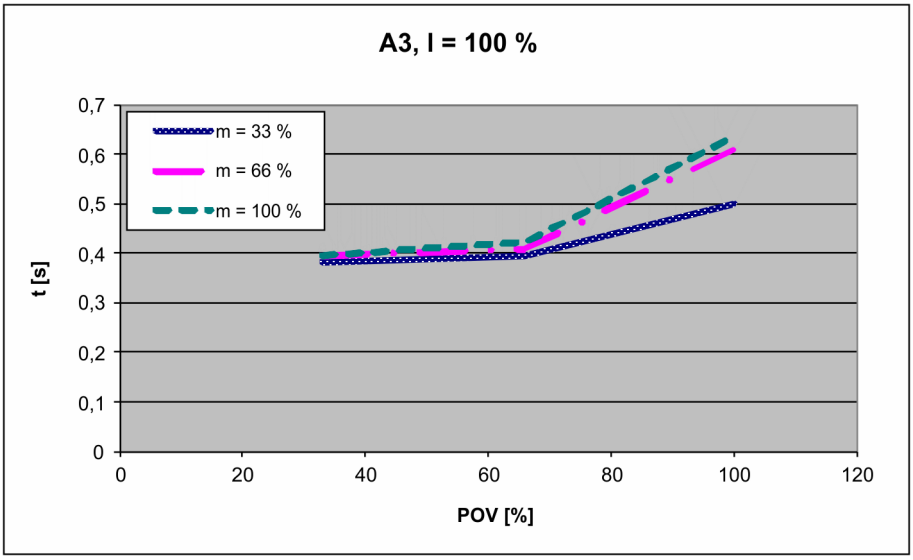

Fig. 4-109: Stopping times for STOP 1, axis 3

4.13.5 Stopping distances and times, KR 210 R3300-2 K and KR 210 R3300-2 K-F

4.13.5.1 Stopping distances and stopping times, STOP 0, A1 to A3

The values for stop category 0 when a STOP 0 is triggered refer to the following configuration:

- Extension I = 100%
- Program override POV = 100%
- Mass m = rated payload

Stopping distance	
A1	44.03 °
A2	24.54 °

A3	25.54 °
Stopping time	
A1	0.83 s
A2	0.50 s
A3	0.58 s

4.13.5.2 Stopping distances and stopping times, STOP 1, A1

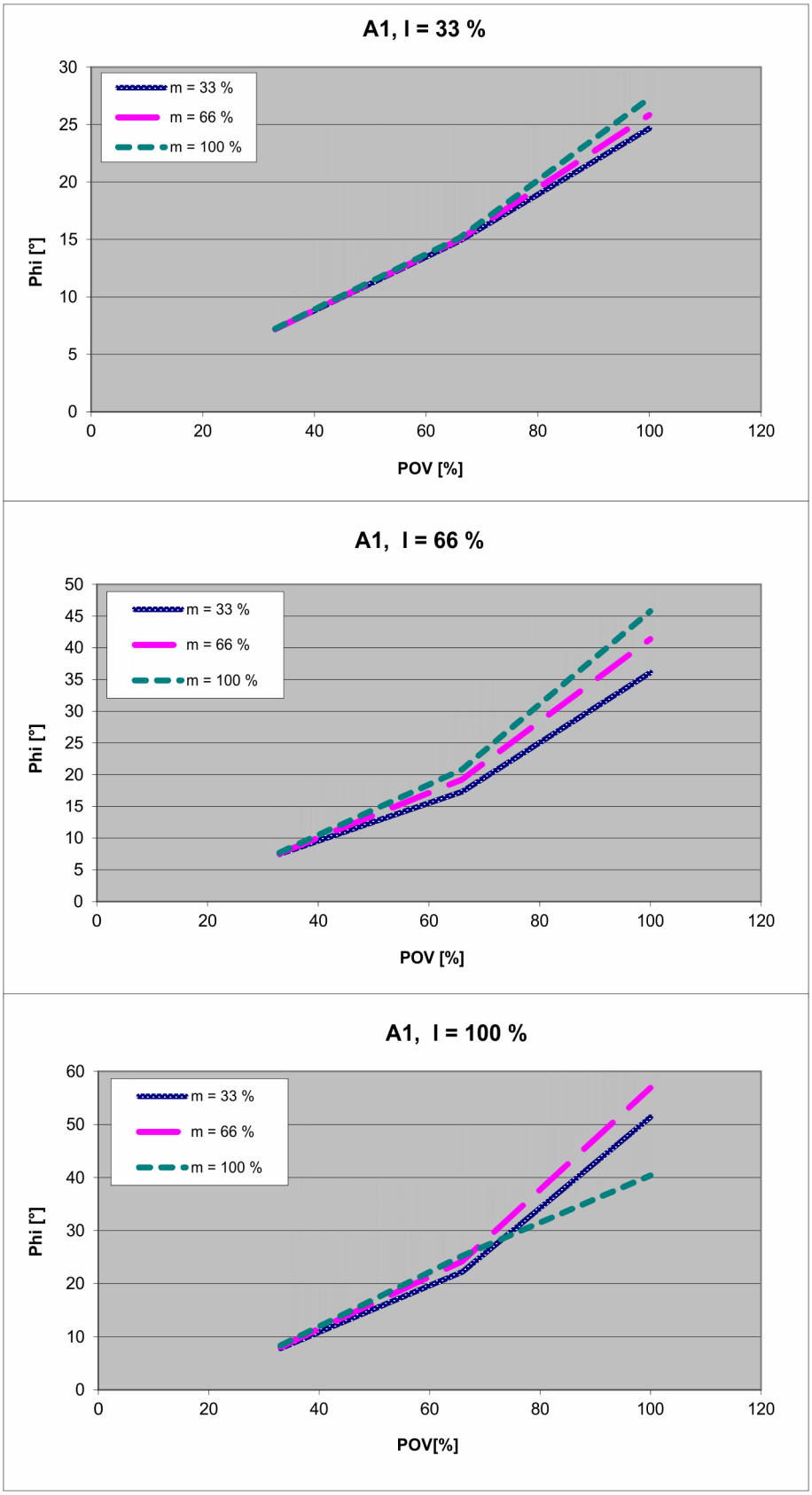

Fig. 4-110: Stopping distances for STOP 1, axis 1

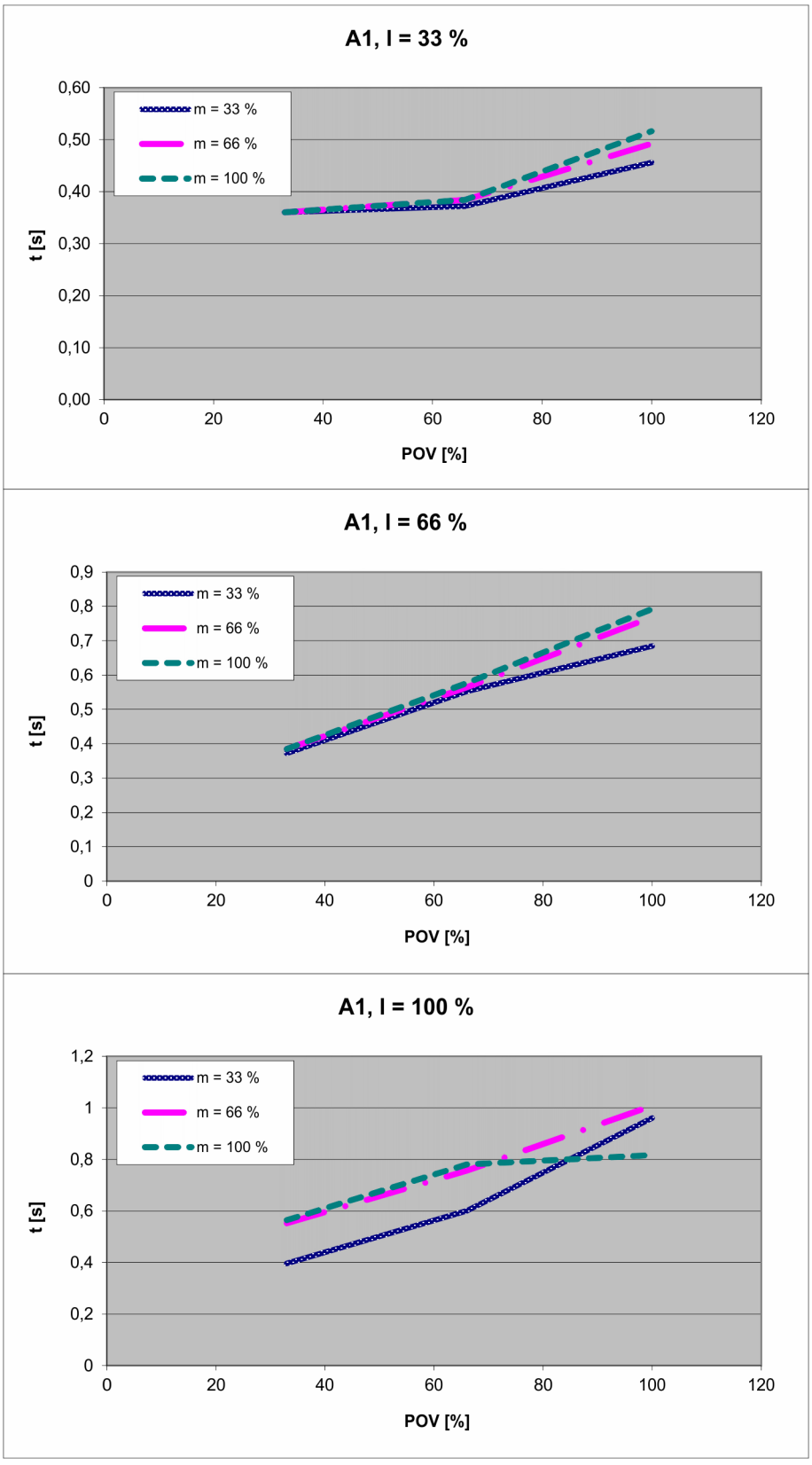

Fig. 4-111: Stopping times for STOP 1, axis 1

4.13.5.3 Stopping distances and stopping times, STOP 1, A2

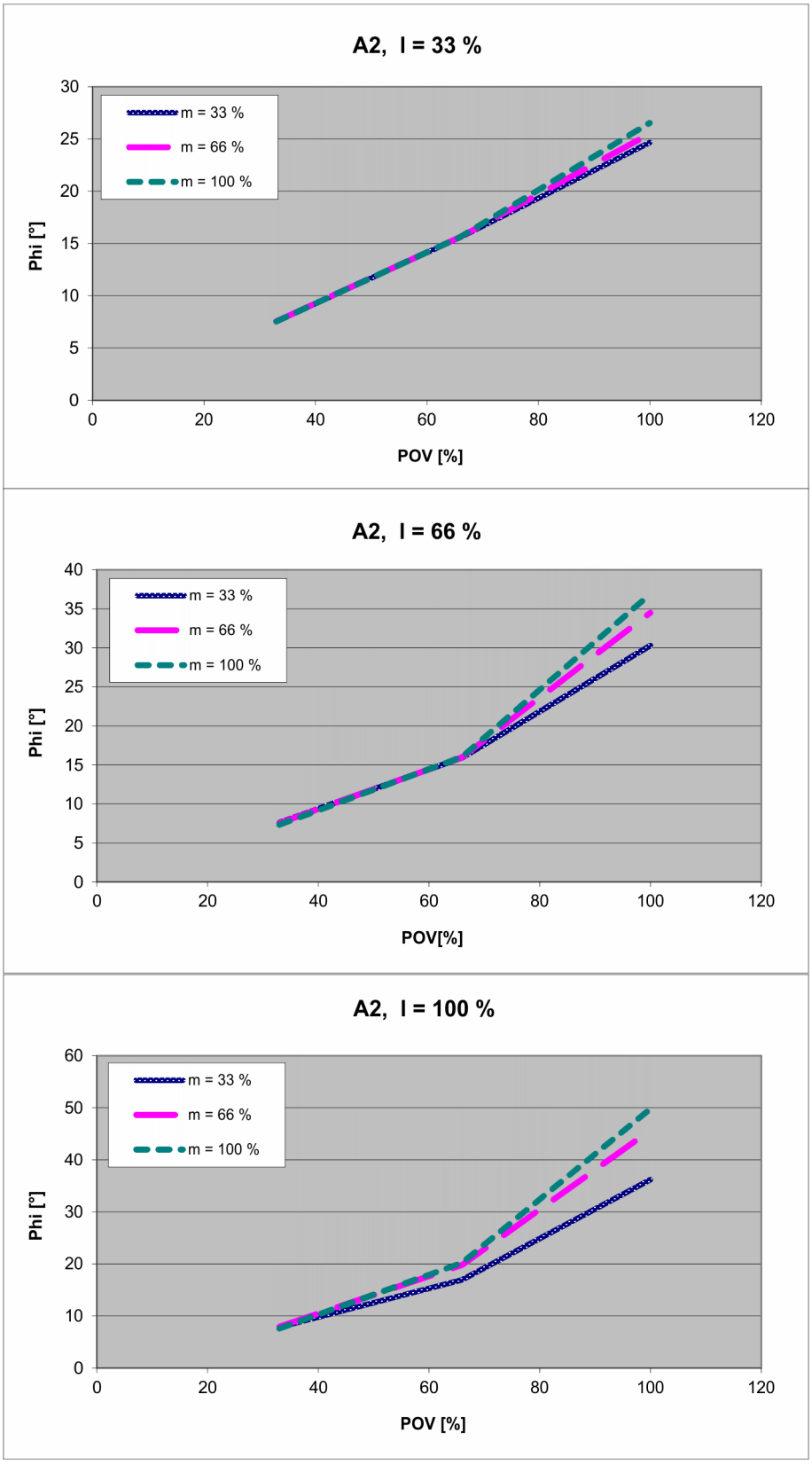

Fig. 4-112: Stopping distances for STOP 1, axis 2

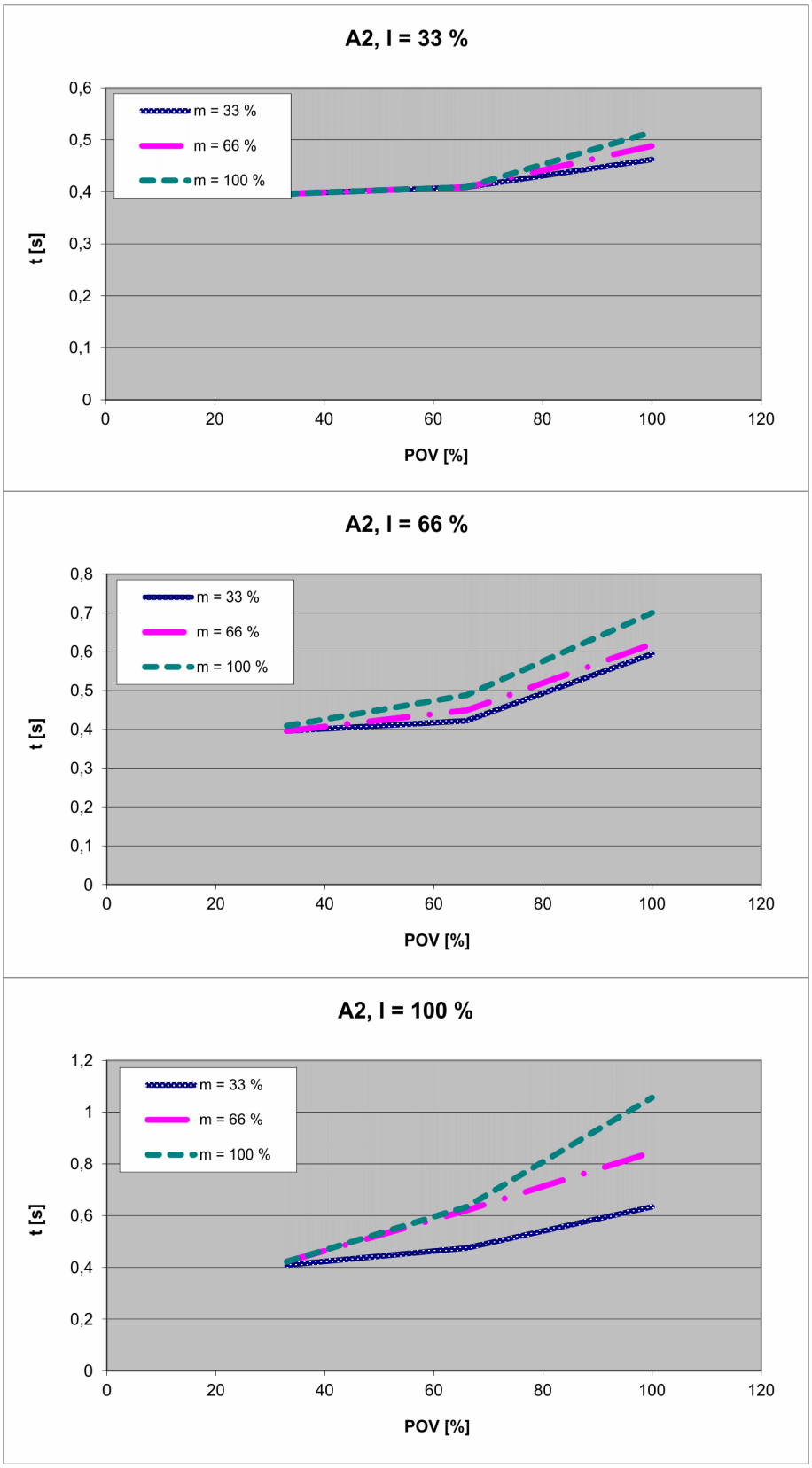

Fig. 4-113: Stopping times for STOP 1, axis 2

4.13.5.4 Stopping distances and stopping times, STOP 1, A3

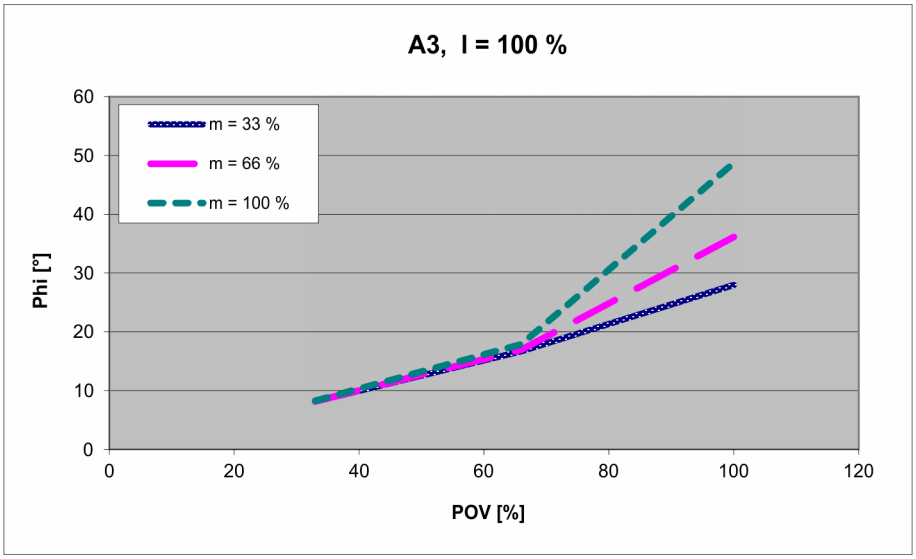

Fig. 4-114: Stopping distances for STOP 1, axis 3

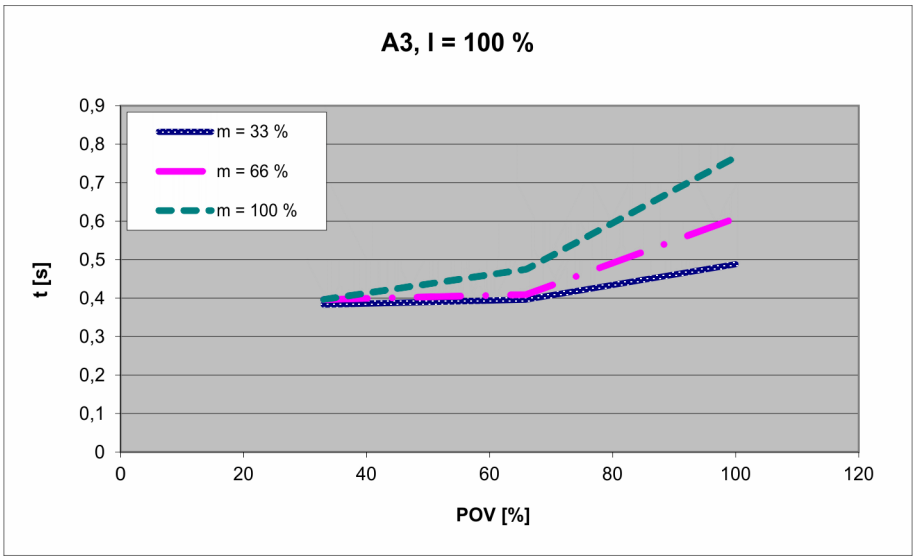

Fig. 4-115: Stopping times for STOP 1, axis 3

4.13.6 Stopping distances and times, KR 270 R3100-2 K and KR 270 R3100-2 K-F

4.13.6.1 Stopping distances and stopping times, STOP 0, A1 to A3

The values for stop category 0 when a STOP 0 is triggered refer to the following configuration:

- Extension I = 100%
- Program override POV = 100%
- Mass m = rated payload

Stopping distance	
A1	29.22 °
A2	19.51 °

A3	16.83 °
Stopping time	
A1	0.66 s
A2	0.55 s
A3	0.37 s

4.13.6.2 Stopping distances and stopping times, STOP 1, A1

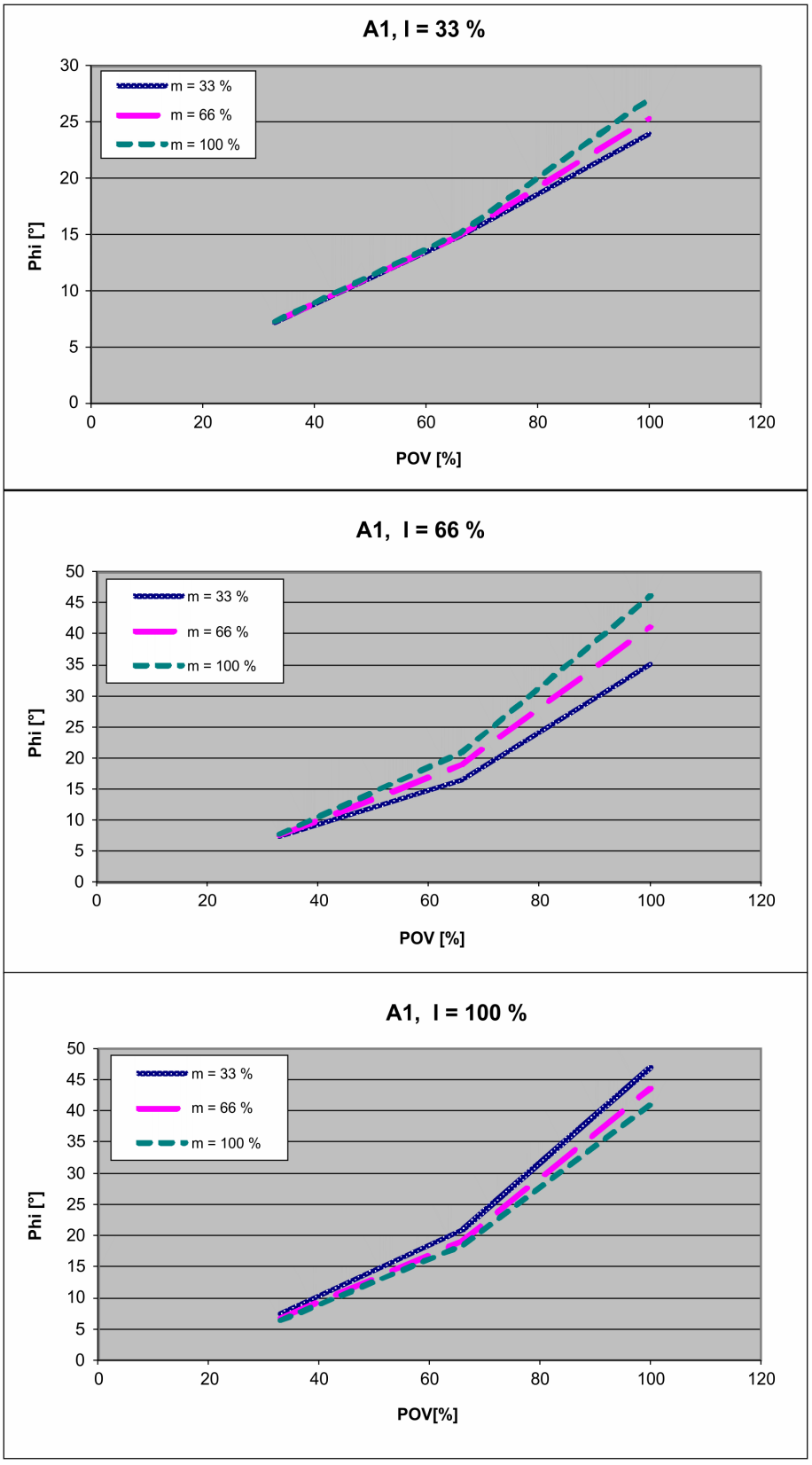

Fig. 4-116: Stopping distances for STOP 1, axis 1

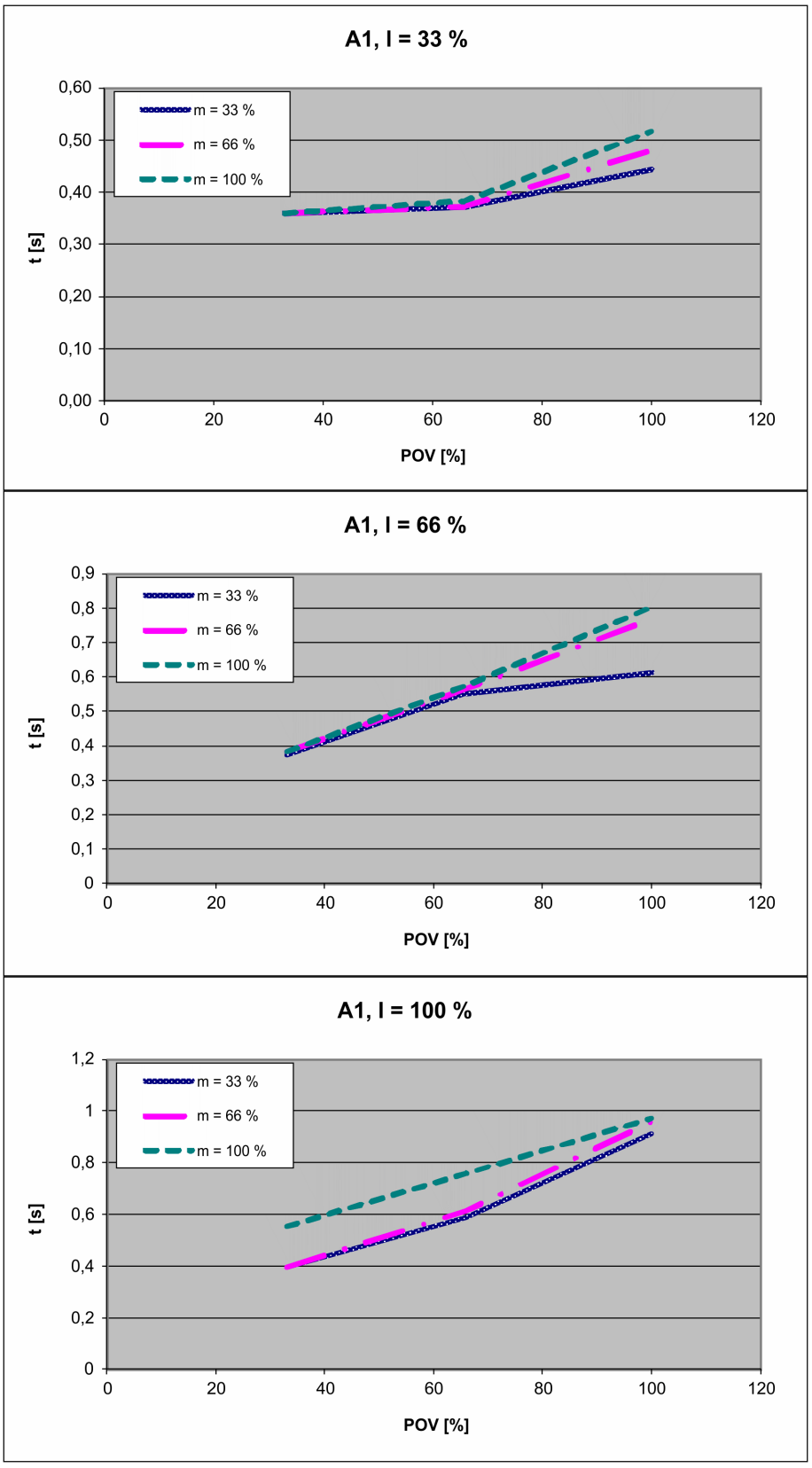

Fig. 4-117: Stopping times for STOP 1, axis 1

4.13.6.3 Stopping distances and stopping times, STOP 1, A2

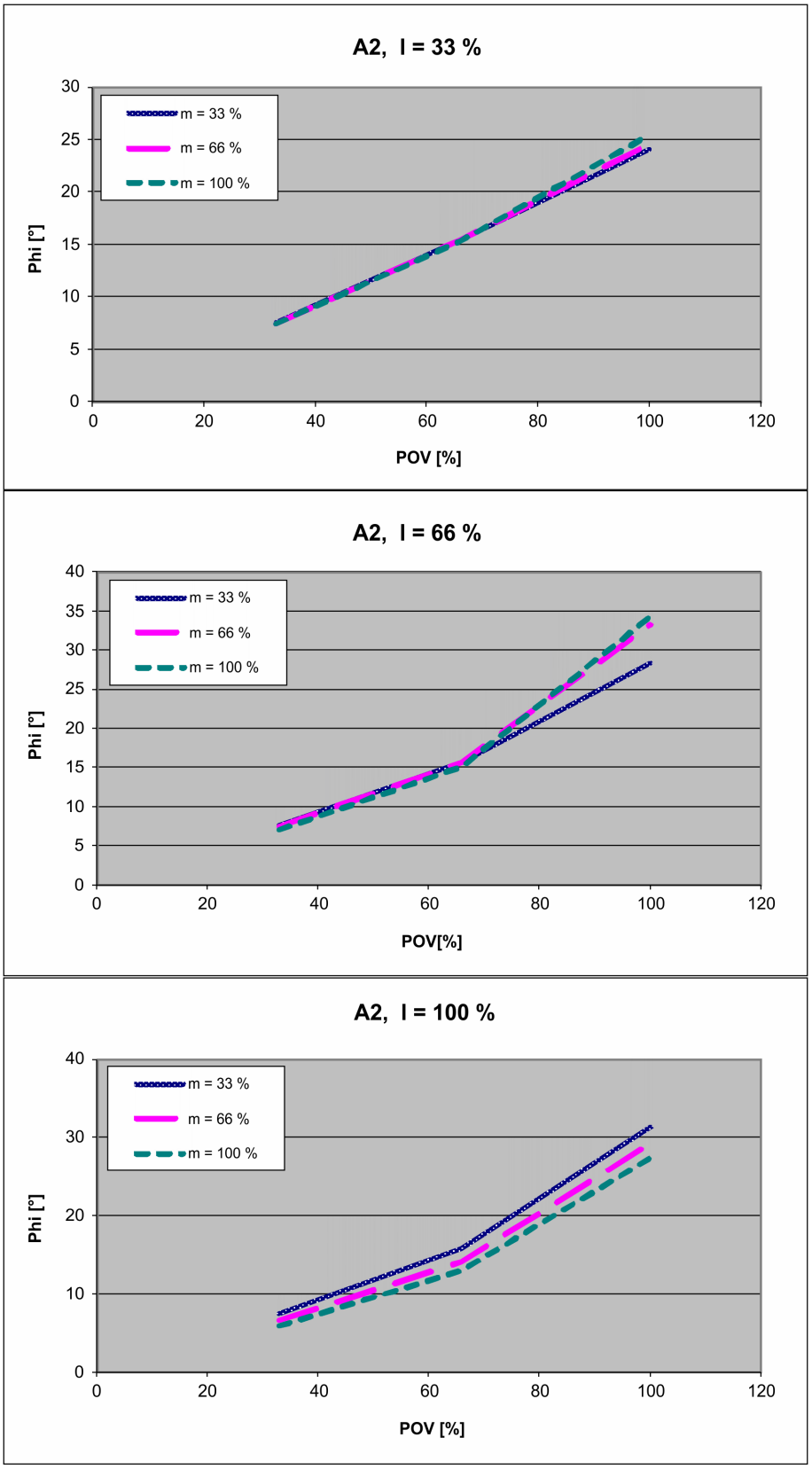

Fig. 4-118: Stopping distances for STOP 1, axis 2

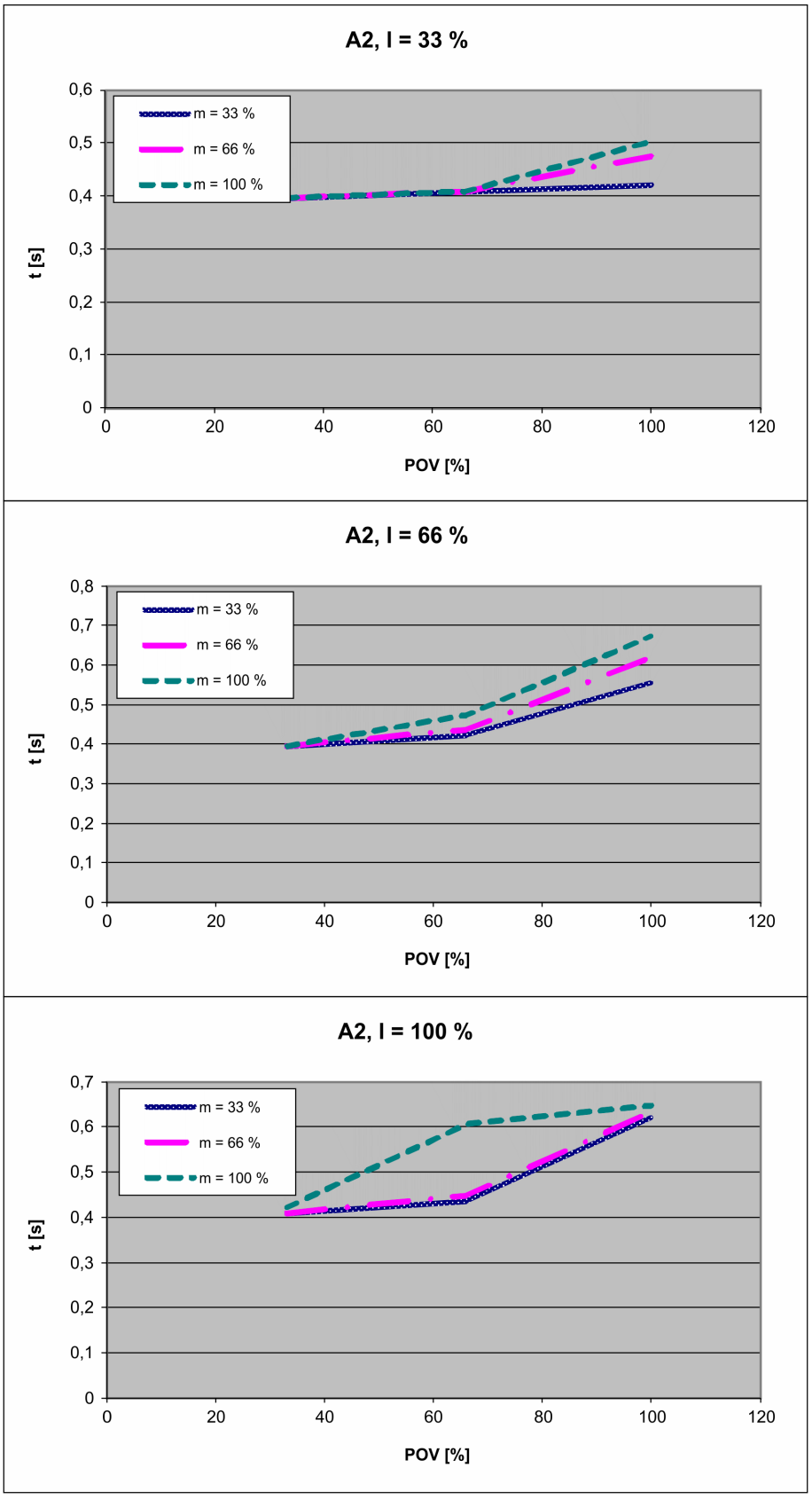

Fig. 4-119: Stopping times for STOP 1, axis 2

4.13.6.4 Stopping distances and stopping times, STOP 1, A3

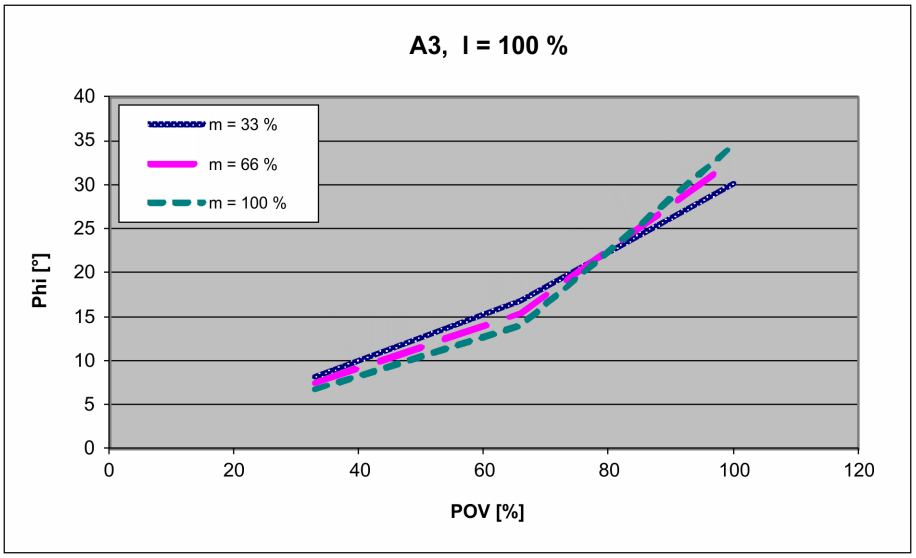

Fig. 4-120: Stopping distances for STOP 1, axis 3

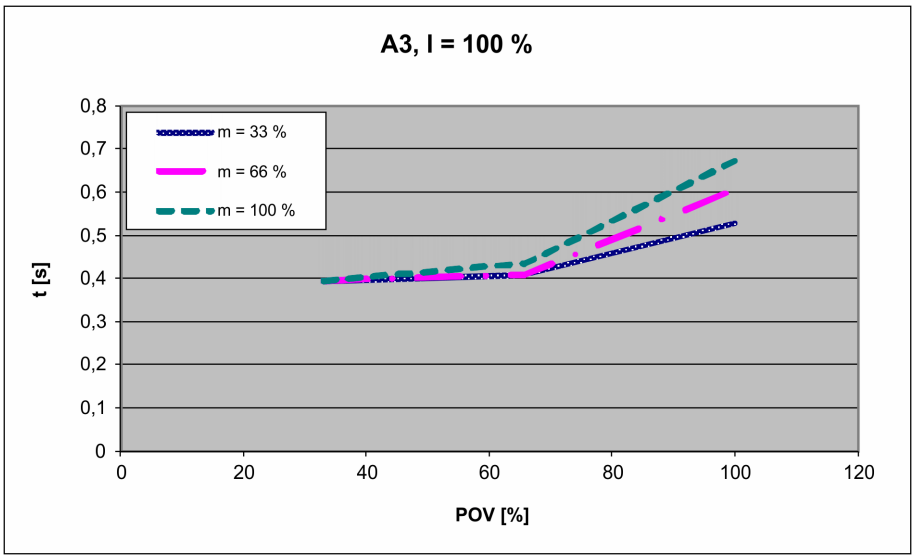

Fig. 4-121: Stopping times for STOP 1, axis 3

5 Planning

5.1 Information for planning

In the planning and design phase, care must be taken regarding the functions or applications to be executed by the kinematic system. The following conditions can lead to premature wear. They necessitate shorter maintenance intervals and/or earlier exchange of components. In addition, the permissible operating parameters specified in the technical data must be taken into account and observed during planning.

- Continuous operation near temperature limits
- Continuous operation in abrasive environments
- Continuous operation close to the performance limits, e.g. high rpm of an axis
- Start of operation at maximum power from cold, e.g. after an idle period
- High duty cycle of individual axes
- Monotonous motion profiles, e.g. short, frequently recurring axis motions
- Static axis positions, e.g. continuous vertical position of a wrist axis
- External forces (process forces) acting on the robot

If one or more of these conditions are to apply during operation of the kinematic system, KUKA Service must be consulted.

If the robot reaches its corresponding operation limit or if it is operated near the limit for a period of time, the built-in monitoring functions come into effect and the robot is automatically switched off.

This protective function can limit the availability of the robot system.

5.2 Mounting base with centering

Description

Designation	Article number	Weight
Mounting base set S780	0000-327-118	approx. 58.5 kg

The mounting base with centering is used when the kinematic system is fastened to the floor, i.e. directly on a concrete foundation.

The mounting base with centering consists of:

- Bedplates
- Chemical anchors
- Fastening elements

This mounting variant requires a level and smooth surface on a concrete foundation with adequate load bearing capacity. The concrete foundation must be able to accommodate the forces occurring during operation. There must be no layers of insulation or screed between the bedplates and the concrete foundation.

The minimum dimensions must be observed.

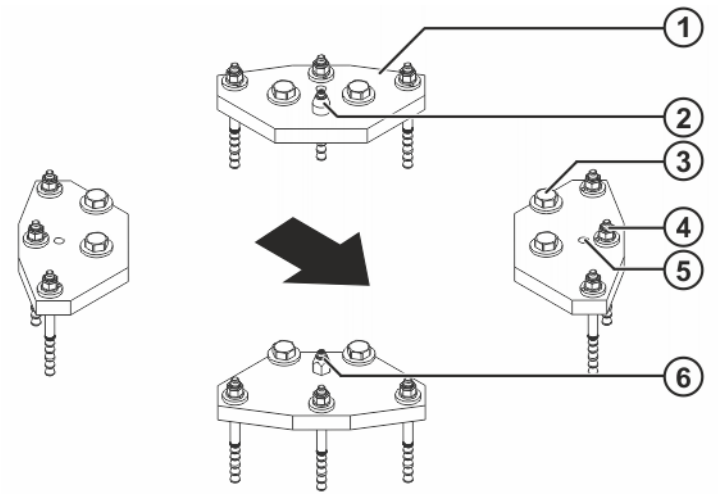

Fig. 5-1: Mounting base

1 Bedplate (4x)
2 Locating pin, cylindrical
3 M24x65-8.8-A2K hexagon bolt with conical spring washer (8x)
4 Chemical anchor (12x)
5 M20 tapped hole for leveling screws (4x)
6 Locating pin, flat-sided

Grade of concrete for foundations

When producing concrete foundations, the load-bearing capacity of the ground and the country-specific construction regulations must be observed. There must be no layers of insulation or screed between the bedplate/bedplates and the concrete foundation. The quality of the concrete must meet the requirements of the following standard:

- C20/25 according to EN 206

WARNING

Danger to life and limb due to incorrect mounting

If not mounted correctly, the kinematic system may topple over or fall down. Death, severe injury or damage to property may result.

- Only install the kinematic system using the mounting base or machine frame mounting.
- The stability must be ensured by the integrator or start-up technician.

Dimensioned drawing

The following illustration (>>> *Fig. 5-2*) provides all the necessary information on the mounting base, together with the required foundation data. The specified foundation dimensions refer to the safe transmission of the foundation loads into the foundation and not to the stability of the foundation.

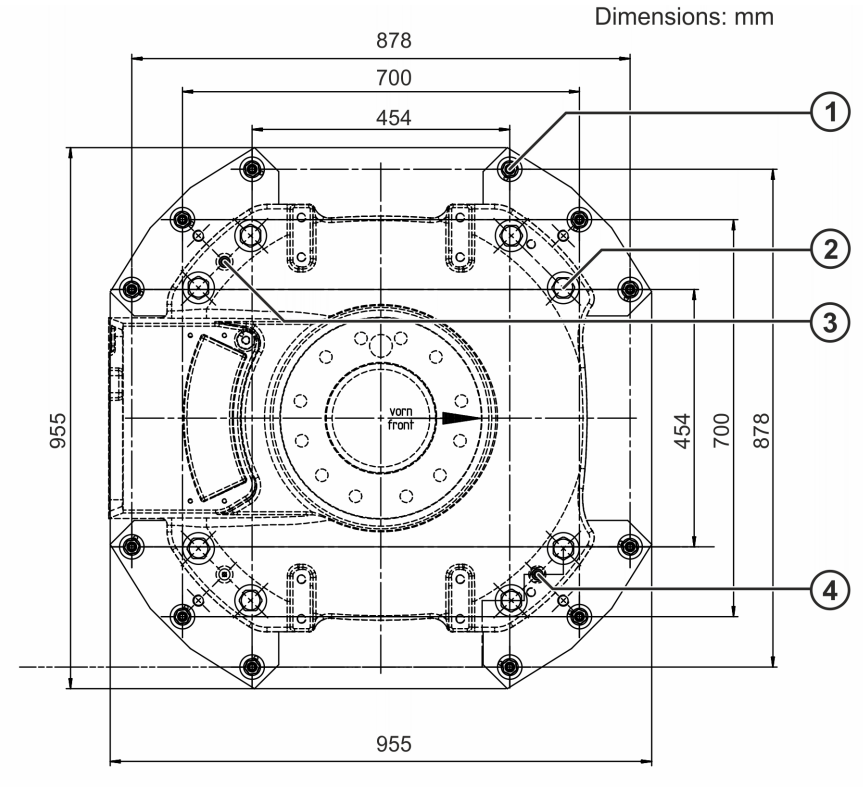

Fig. 5-2: Mounting base, dimensioned drawing

1	Chemical anchor (12x)
2	M24x65-8.8-A2K hexagon bolt (8x)
3	Locating pin, cylindrical
4	Locating pin, flat-sided

To ensure that the anchor forces are safely transmitted to the foundation, observe the dimensions for concrete foundations specified in the following illustration.

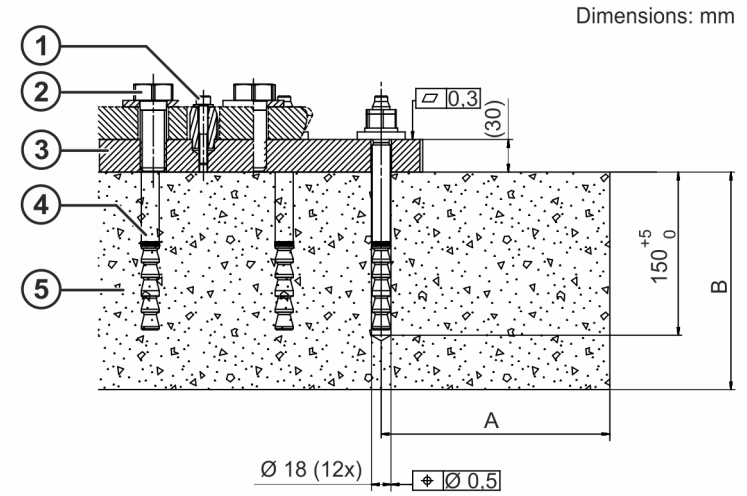

Fig. 5-3: Foundation cross-section

1	Locating pin	4	Chemical anchor
2	Hexagon bolt with lock washer	5	Concrete foundation
3	Bedplate		

B Min. concrete thickness in mm	Concrete grade	A Min. distance to edge in mm
180	Without edge reinforcement	360
	With edge reinforcement ≥Ø12	290
	With edge reinforcement ≥Ø12 and stirrup reinforcement at a distance of ≤100 mm	245
200	Without edge reinforcement	340
	With edge reinforcement ≥Ø12	275
	With edge reinforcement ≥Ø12 and stirrup reinforcement at a distance of ≤100 mm	230
250	Without edge reinforcement	300
	With edge reinforcement ≥Ø12	240
	With edge reinforcement ≥Ø12 and stirrup reinforcement at a distance of ≤100 mm	200

5.3 Mounting base 150 mm (optional)

Description

Designation	Article number	Weight
Mounting base S780	0000-338-338	approx. 261 kg

The mounting base with centering is used when the kinematic system is fastened to the floor, i.e. directly on a concrete foundation.

The mounting base with centering consists of:

- Bedplate
- Chemical anchors
- Fastening elements

This mounting variant requires a level and smooth surface on a concrete foundation with adequate load bearing capacity. The concrete foundation must be able to accommodate the forces occurring during operation. There must be no layers of insulation or screed between the bedplate and the concrete foundation.

The minimum dimensions must be observed.

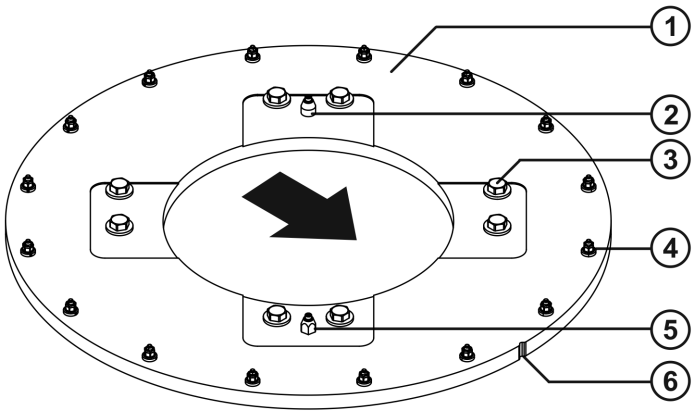

Fig. 5-4: Mounting base

1 Bedplate
2 Locating pin, cylindrical
3 M24x65-8.8-A2K hexagon bolt with conical spring washer (8x)
4 Chemical anchor (16x)
5 Locating pin, flat-sided
6 Orientation notch, zero position

Grade of concrete for foundations

When producing concrete foundations, the load-bearing capacity of the ground and the country-specific construction regulations must be observed. There must be no layers of insulation or screed between the bedplate/bedplates and the concrete foundation. The quality of the concrete must meet the requirements of the following standard:

- C20/25 according to EN 206

WARNING

Danger to life and limb due to incorrect mounting

If not mounted correctly, the kinematic system may topple over or fall down. Death, severe injury or damage to property may result.

- Only install the kinematic system using the mounting base or machine frame mounting.
- The stability must be ensured by the integrator or start-up technician.

Dimensioned drawing

The following illustration (>>> *Fig. 5-5*) provides all the necessary information on the mounting base, together with the required foundation data. The specified foundation dimensions refer to the safe transmission of the foundation loads into the foundation and not to the stability of the foundation.

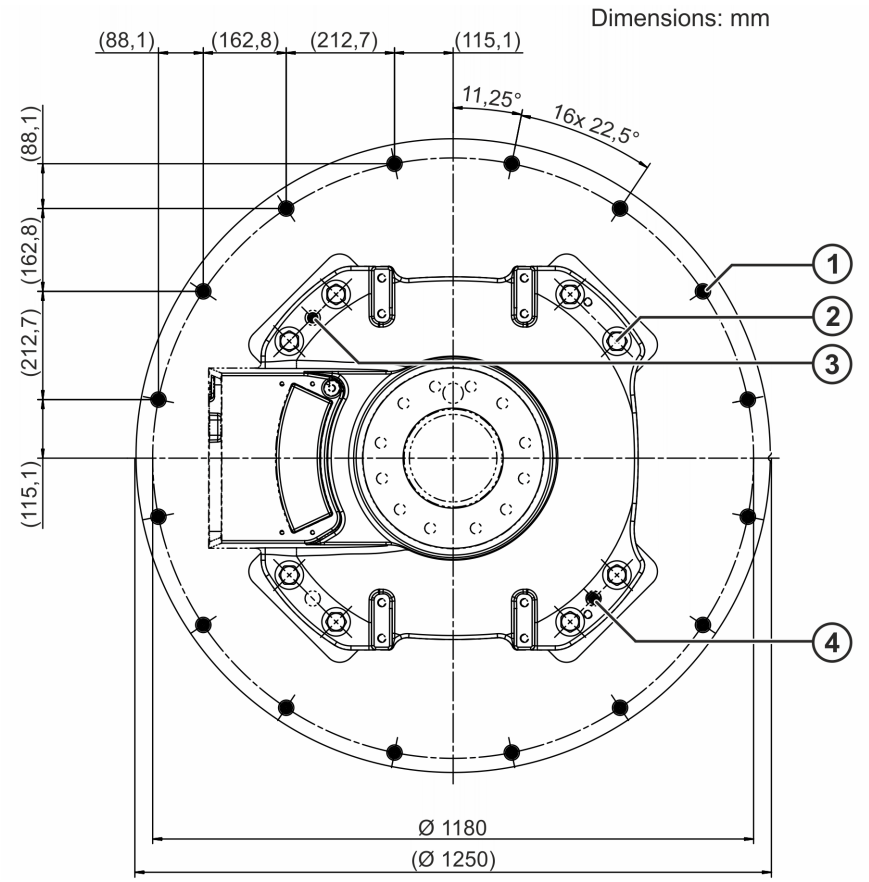

Fig. 5-5: Mounting base, dimensioned drawing

1 Chemical anchor (16x)
2 M24x65-8.8-A2K hexagon bolt (8x)
3 Locating pin, cylindrical
4 Locating pin, flat-sided

To ensure that the anchor forces are safely transmitted to the foundation, observe the dimensions for concrete foundations specified in the following illustration.

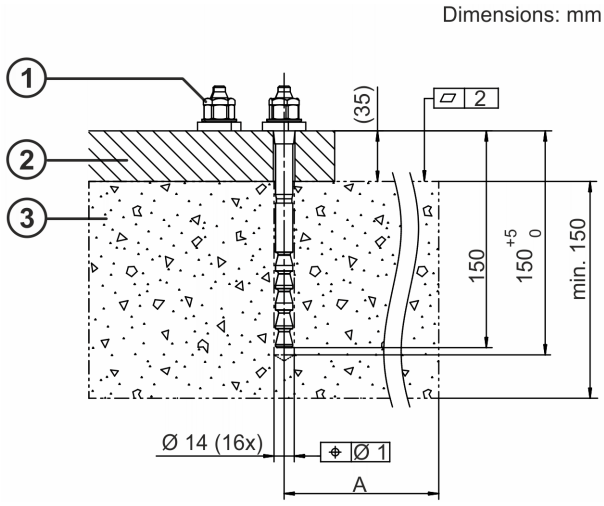

Fig. 5-6: Foundation cross-section

1 Chemical anchor (16x)
2 Bedplate

3 Concrete foundation

Min. concrete thickness in mm	Concrete grade	A Min. distance to edge in mm
150	Without edge reinforcement	365
	With edge reinforcement ≥Ø12	290
	With edge reinforcement ≥Ø12 and stirrup reinforcement at a distance of ≤100 mm	235

5.4 Machine frame mounting

Description

Designation	Article number	Weight
Machine frame mounting	0000-310-641	approx. 3.52 kg

The machine frame mounting assembly is used when the robot is fastened on a steel structure, a booster frame (pedestal) or a KUKA linear unit. This assembly is also used if the robot is installed on the ceiling. It must be ensured that the substructure is able to withstand safely the forces occurring during operation (foundation loads). The following diagram contains all the necessary information that must be observed when preparing the mounting surface (>>> *Fig. 5-7*).

The machine frame mounting assembly consists of:

- Locating pins
- Hexagon bolts with conical spring washers

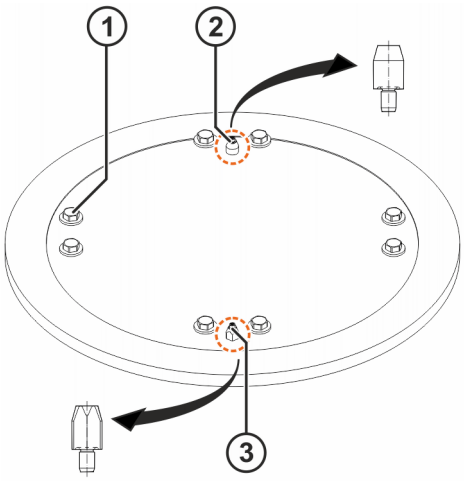

Fig. 5-7: Machine frame mounting

1 M24x65-8.8-A2K hexagon bolt (8x)
2 Locating pin, cylindrical
3 Locating pin, flat-sided

WARNING

Danger to life and limb due to incorrect mounting

If not mounted correctly, the kinematic system may topple over or fall down. Death, severe injury or damage to property may result.

- Only install the kinematic system using the mounting base or machine frame mounting.
- The stability must be ensured by the integrator or start-up technician.

Dimensioned drawing

The following illustration (>>> *Fig. 5-8*) provides all the necessary information on machine frame mounting, together with the required foundation data.

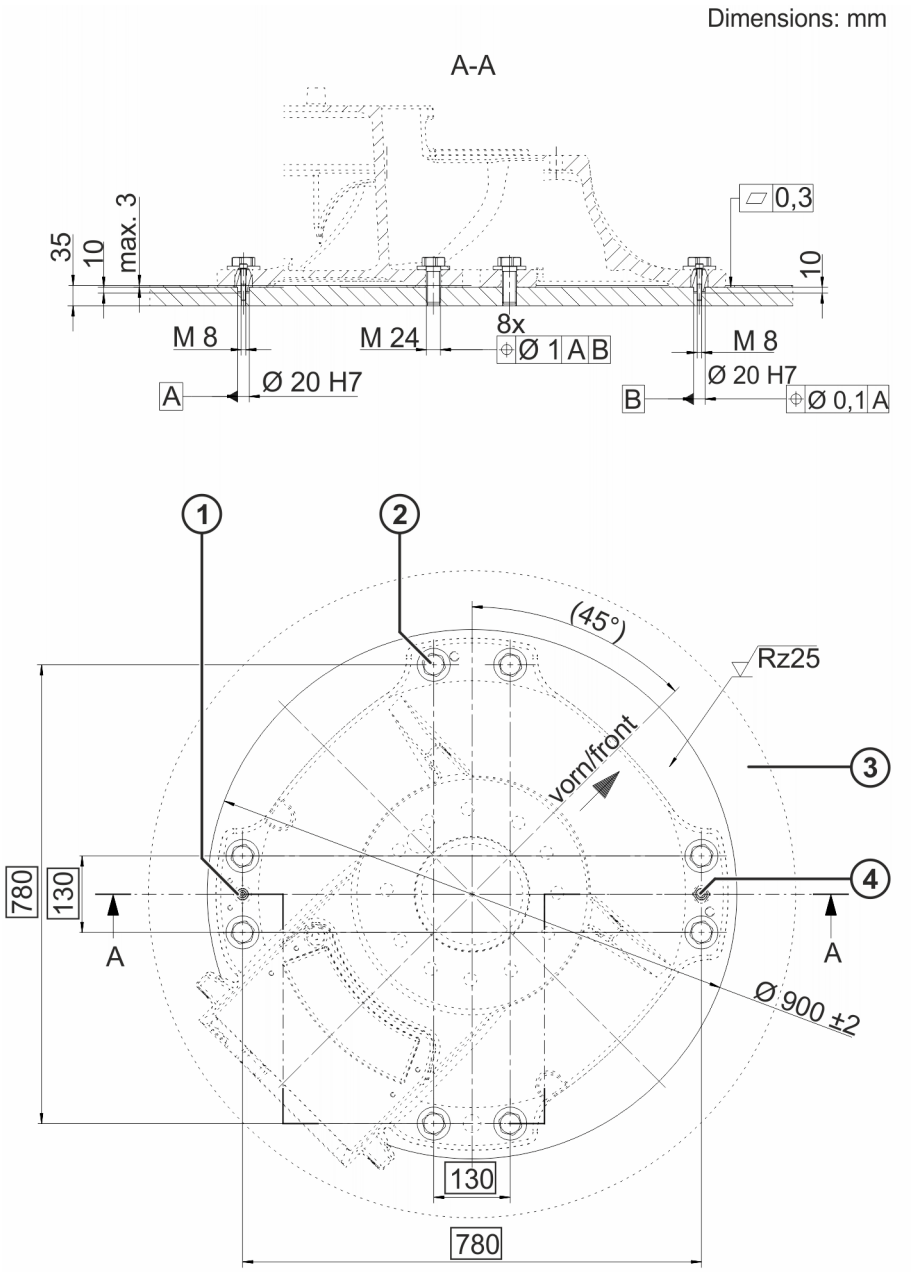

Fig. 5-8: Machine frame mounting, dimensioned drawing

1 Locating pin, cylindrical	3 Mounting surface
2 M24x65-8.8-A2K hexagon bolt (8x)	4 Locating pin, flat-sided

5.5 Connecting cables and interfaces

Connecting cables

The connecting cables comprise all the cables for transferring energy and data between the robot and the robot controller. They are connected on the robot side with connectors at interface A1.

Cable lengths of 7 m, 10 m, 15 m, 20 m, 25 m, 30 m, 35 m and 50 m are available as standard. The maximum length of the connecting cables must not exceed 50 m. The maximum number of connectors is 1, i.e. a maximum of 2 connecting cables may be combined with each other. Thus

if the robot is operated on a linear unit which has its own energy supply chain, this cable must also be taken into account.

For the connecting cables, an additional ground conductor is always required to provide a low-resistance connection between the robot and the control cabinet in accordance with DIN EN 60204. The ground conductor is connected via ring cable lugs. The threaded bolts for connecting the two ground conductors are located on the base frame of the robot.

The following points must be observed when planning and routing the connecting cables:

- The bending radius for fixed routing must not be less than 150 mm for motor cables and 60 mm for data cables.
- Protect cables against exposure to mechanical stress.
- Route the cables without mechanical stress – no tensile forces on the connectors.
- Cables are only to be installed indoors.
- Observe the permissible temperature range (fixed installation) of 263 K (-10 °C) to 343 K (+55 °C).
- Route the motor cables and the data cables separately in metal ducts. If necessary, take additional measures to ensure electromagnetic compatibility (EMC).

CAUTION

Risk of injury due to tripping hazards

Improper installation of cables can cause tripping hazards. Injuries or damage to property may result.

- The connecting cables must be installed in such a way (e.g. cable ducts) as to prevent tripping hazards.
- Potential tripping hazards must be marked accordingly.

Interface A1

Interface A1 is located at the rear of the base frame.

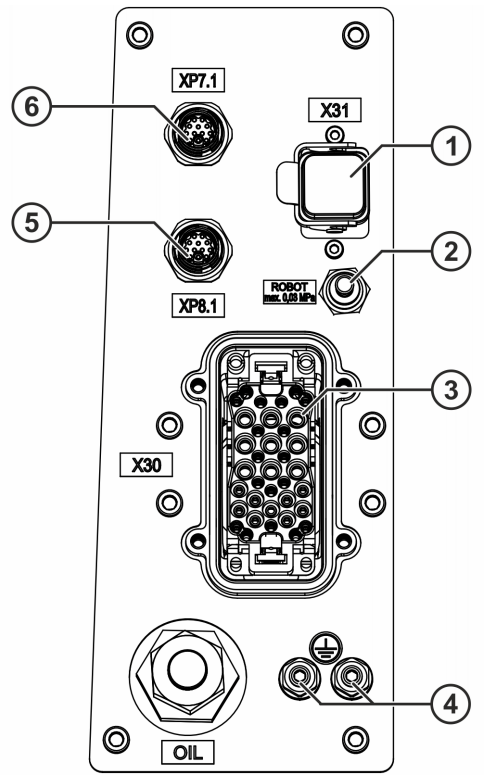

Fig. 5-9: Interface A1

1	Data cable X31	4	Ground conductor (2x)
2	Purging air (for Foundry only)	5	External axis XP8.1
3	Motor cable X30	6	External axis XP7.1

Interface for energy supply system

The robot can be equipped with an energy supply system between axis 1 and axis 2 and a second energy supply system between axis 3 and axis 6. The A1 interface required for this is located on the rear of the base frame, the A3 interface is located on the side of the arm and the interface for axis 6 is located on the robot tool. Depending on the application, the interfaces differ in design and scope. They can be equipped, for example, with connections for cables and hoses. Detailed information on the connector pin allocation, threaded unions, etc. is given in separate documentation.

6 Transportation

6.1 Transporting the robot

Description

Move the robot into its transport position each time it is transported. It must be ensured that the robot is stable while it is being transported. The robot must remain in its transport position until it has been fastened in position. Before the robot is lifted, it must be ensured that it is free from obstructions. Remove all transport safeguards, such as nails and screws, in advance. First remove any rust or adhesive on contact surfaces.

Avoid vibrations and impacts during transportation in order to prevent damage to the manipulator.

Transport position

The robot must be in the transport position before it can be transported. The robot is in the transport position when the axes are in the following positions:

Transport position	
A1	0 °
A2	-115 °
A3	-108 °
A4	0 °
A5	115 °
A6	0 °

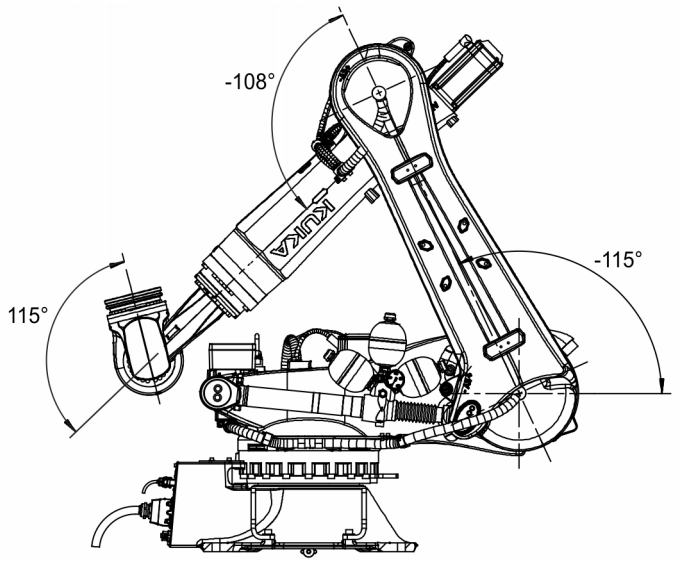

Fig. 6-1: Transport position

Transport dimensions

The transportation dimensions (>>> *Fig. 6-2*) for the robot can be noted from the following diagram. The position of the center of gravity and the weight vary according to the specific configuration and the position of axes 2 and 3. The specified dimensions refer to the robot without equipment.

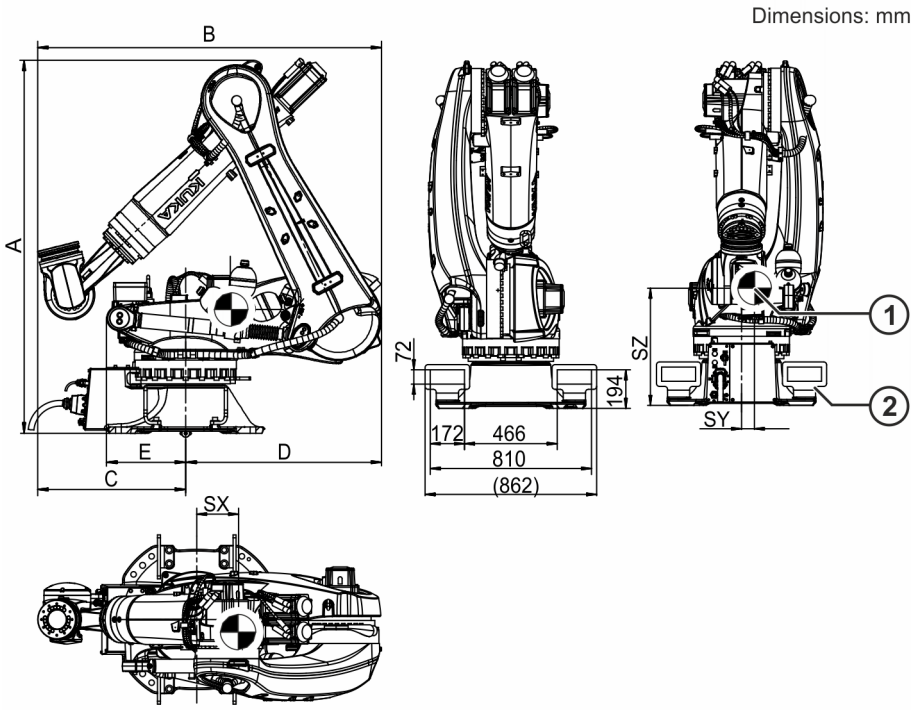

Fig. 6-2: Transport dimensions

1 Center of gravity
2 Fork slots

Transport dimensions and centers of gravity in mm:

Robot	A	B	C	D	E	SX	SY	SZ
KR 120 R3500-2 P KR 120 R3500-2 P-C	1967	1904	967	937	379	177	-50	739
KR 120 R3900-2 K	1967	2191	1254	937	379	144	-49	739
KR 180 R3500-2 K KR 180 R3500-2 K-F	1967	1904	967	937	379	177	-50	739
KR 210 R3300-2 K KR 210 R3300-2 K-F	1967	1760	823	937	379	132	-62	732
KR 270 R3100-2 K KR 270 R3100-2 K-F	1785	1675	738	937	379	210	-47	686

Transportation

The robot can be transported by fork lift truck or using lifting tackle (optional).

WARNING

Danger to life and limb due to non-authorized handling equipment

If unsuitable handling equipment is used, the robot may topple or be damaged during transportation. Death, severe injuries or damage to property may result.

- Only use authorized handling equipment with a sufficient load-bearing capacity.
- Only transport the robot in the manner specified here.

Transportation by fork lift truck

For transport by fork lift truck (>>> *Fig. 6-3*), four fork slots are mounted on the base frame. The robot can be picked up by the fork lift truck from the front and rear. The base frame must not be damaged when inserting the forks into the fork slots. The fork lift truck must have a minimum payload capacity of 2.0 t and an adequate fork length.

For installation situations in which the fork slots are not accessible, the “Recovery aid” accessory is available. With this device, the robot can also be transported using the fork lift truck.

Ceiling-mounted machines can also be transported in a transport frame (already in the correct orientation).

NOTICE

Damage to property due to overloading of the fork slots

Overloading the fork slots during transportation can cause damage to property.

- Avoid overloading the fork slots through undue inward or outward movement of hydraulically adjustable forks of the fork lift truck.

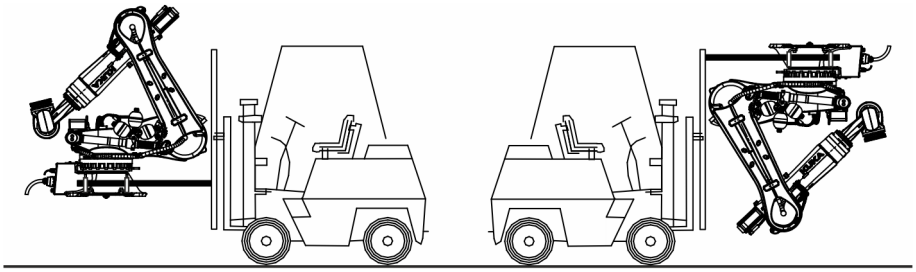

Fig. 6-3: Transportation by fork lift truck

Transportation with lifting tackle (optional)

The robot can also be transported using a crane and lifting tackle (optional) (>>> *Fig. 6-4*). For this, it must be in the transport position. The lifting tackle (optional) is attached to the 2 front fork slots and the rotating column. All the legs must be routed as shown in the following illustration so that the robot is not damaged. Installed tools and items of equipment can cause undesirable shifts in the center of gravity. Items of equipment, especially energy supply systems, must be removed to the extent necessary to avoid them being damaged by the legs of the lifting tackle during transportation.

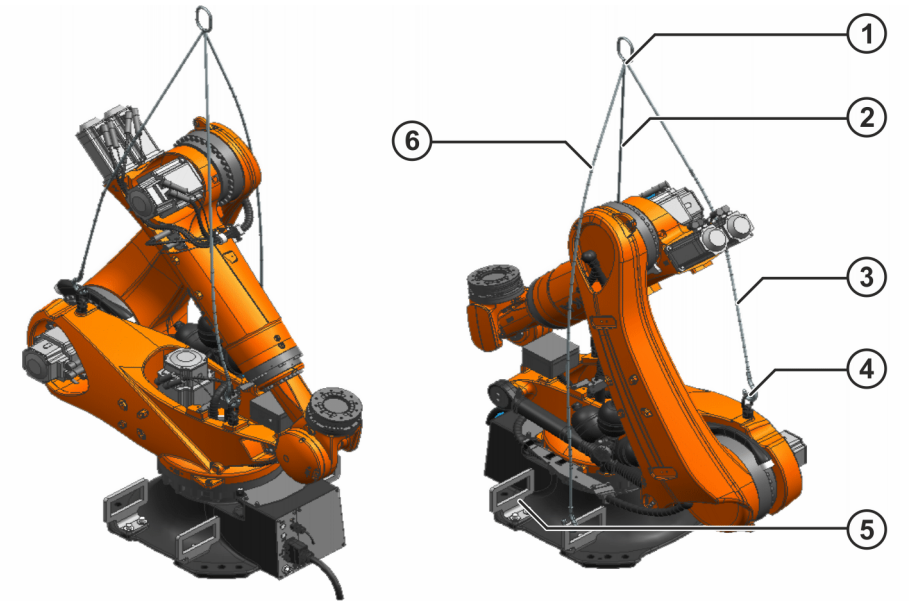

Fig. 6-4: Transportation using lifting tackle

1 Lifting tackle assembly
2 Leg G1
3 Leg G2
4 Attachment point for swivel
5 Fork slot
6 Leg G3

WARNING

Risk of injury during transportation

The robot may tip during transportation. Death, severe injuries or damage to property may result.

- When transporting the robot using lifting tackle (optional) / rope sling, care must be exercised to prevent it from tipping.
- If necessary, additional safeguarding measures must be taken.
- It is forbidden to pick up the robot in any other way using a crane!

Transport safeguard

A transport safeguard is available if the robot is transported by truck, for example. The robot can be tied down by means of a lashing belt. Care must be taken to position the lashing belt over the transport safeguard. The lashing belt must not be placed over the motor or other robot components and thus subjected to a load. Damage to property may otherwise result.

The transport safeguard and fork slots can be removed for operation.

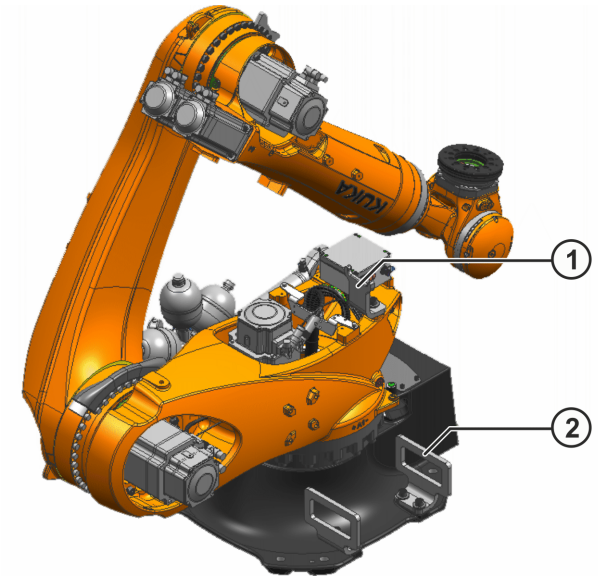

Fig. 6-5: Transport safeguard

1	Transport safeguard
2	Fork slot

7 Start-up and recommissioning

The procedure for start-up and recommissioning depends on the type of fastening and installation position of the manipulator.

Description		Information
Robot installation	Installation position: floor and mounting base	Starting up floor-mounted robots (mounting base) (>>> *7.1 "Starting up floor-mounted robots (mounting base)" Page 195*)
Robot installation	Installation position: floor and mounting base 150 mm (option)	Starting up floor-mounted robots (mounting base 150 mm option) (>>> *7.2 "Starting up floor-mounted robots (optional 150 mm mounting base)" Page 200*)
Robot installation	Installation position: floor, ceiling and machine frame mounting	Starting up floor-mounted robots (machine frame mounting) (>>> *7.3 "Starting up robots (machine frame mounting)" Page 205*)

7.1 Starting up floor-mounted robots (mounting base)

Description

The mounting base is used for installing robots on a foundation.

They are fastened to a suitable concrete foundation using a bedplate / foundation slats and chemical anchors.

This description is valid for the installation of floor-mounted robots with the mounting variant “mounting base”.

If the surface of the concrete foundation is not sufficiently smooth and even, the differences must be evened out with a suitable leveling compound.

When using chemical anchors, use only resin cartridges and anchors from the same manufacturer. No diamond tools or core drills may be used for drilling the anchor holes; for preference, drilling tools supplied by the anchor manufacturer are to be used. Observe also the manufacturer’s instructions for the use of chemical anchors.

The installation and start-up of the robot controller, the tools mounted and the applications are not described here.

Equipment

The following equipment is required:

Designation	Article number
Lifting tackle/rope sling with sufficient load-bearing capacity	0000-382-665
Crane with sufficient load-bearing capacity	-
Fork lift truck with sufficient load-bearing capacity	-
Drill with a ø 18 mm bit	-
Setting tool approved by the anchor manufacturer	-

Designation	Article number
Set of Allen keys 1.5; 2; 2.5; 3; 4; 5; 6; 8; 10 mm	-
Torque wrench min. 20 to 100 Nm	-
Torque wrench min. 400 to 700 Nm	-

Material

The following material is required:

Designation	Article number	Quantity
Mounting base set S780	0000-327-118	1

Tightening torques

The tightening torques can be found under: (>>> *12.1 "Tightening torques" Page 385*)

These are valid for screws and nuts where no other specifications are given.

Screws of strength class 10.9 and higher, stainless steel screws of strength class 70 or 80, as well as screws with test certification may only be tightened once with the rated tightening torque. These screws must be replaced with new ones when they are slackened for the first time.

Precondition

- The installation site is accessible with a crane or fork lift truck.
- The robot is in the transport position.
- The substructure has been checked for sufficient safety.
- The concrete foundation must have the required dimensions and cross-section.
- The surface of the foundation must be smooth and even.
- Have the leveling compound readily at hand.
- Any tools or other system components which would hinder the work have been removed.
- The connecting cables and ground conductors are routed to the robot and installed.

Work safety

WARNING

Danger to life and limb due to live parts

When work is performed on this system, live parts can lead to unintentional motions of the robot, positioner or other components. Failure to observe this may result in physical injuries and damage to property.

- If work is carried out on an operable system, the main switch on the control cabinet must be turned to the OFF position and secured with a padlock to prevent unauthorized persons from switching it on again.
- Inform the persons involved by means of a sign (e.g. affix a warning sign).
- Warn all persons concerned before putting the system back into operation.

WARNING

Danger to life and limb due to non-authorized handling equipment

If unsuitable handling equipment is used, the robot may topple or be damaged during transportation. Death, severe injuries or damage to property may result.

- Only use authorized handling equipment with a sufficient load-bearing capacity.
- Only transport the robot in the manner specified here.

WARNING

Risk of injury during transportation

The robot may tip during transportation. Death, severe injuries or damage to property may result.

- When transporting the robot using lifting tackle (optional) / rope sling, care must be exercised to prevent it from tipping.
- If necessary, additional safeguarding measures must be taken.
- It is forbidden to pick up the robot in any other way using a crane!

CAUTION

Risk of injury due to tripping hazards

Improper installation of cables can cause tripping hazards. Injuries or damage to property may result.

- The connecting cables must be installed in such a way (e.g. cable ducts) as to prevent tripping hazards.
- Potential tripping hazards must be marked accordingly.

WARNING

Danger to life and limb due to incorrect mounting

If not mounted correctly, the kinematic system may topple over or fall down. Death, severe injury or damage to property may result.

- Only install the kinematic system using the mounting base or machine frame mounting.
- The stability must be ensured by the integrator or start-up technician.

7.1.1 Installing the robot with mounting base

Procedure

1. Clean the concrete foundation.
2. Screw 2 locating pins into the bedplates with 1 M8x55-8.8 Allen screw each and check that they are fitted securely (>>> *Fig. 7-1*).
3. Lift the robot with the crane or fork lift truck and move it to the installation site.
4. Clean the lower mounting surface on the robot.
5. Fasten the 4 bedplates to the robot using 2 M24x65-8.8 hexagon bolts with conical spring washers for each one. Ensure that an entirely vertical position is maintained in order to prevent damage to the locating pins.
6. Tighten 8 M24x65-8.8 hexagon bolts with torque wrench. Increase the tightening torque to the specified value in several stages.

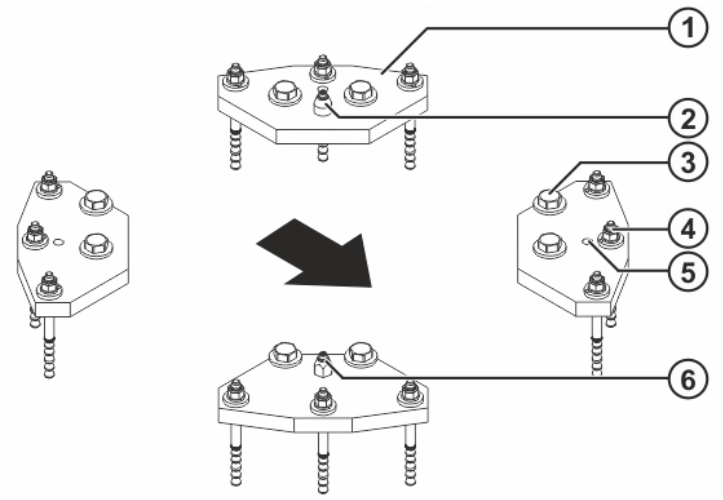

Fig. 7-1: Mounting base

1	Bedplate (4x)
2	Locating pin, cylindrical
3	M24x65-8.8-A2K hexagon bolt with conical spring washer (8x)
4	Chemical anchor (12x)
5	M20 tapped hole for leveling screws (4x)
6	Locating pin, flat-sided

7. Determine the position of the robot on the mounting base in relation to the working envelope.
8. Set the robot down on the mounting base in its installation position.
9. Check the surface of the concrete foundation against the specified value:
   - If the surface is sufficiently smooth and even, continue with step 15.
   - If the surface is not sufficiently smooth and even, continue with step 10.

   If the evenness of the foundation is outside the specified tolerances, this can cause strain or result in loosening of the mounting base.
10. Lift robot with crane or fork lift truck.
11. Apply sufficient leveling compound to the underside of the bedplates (toothed spatula).

    The area under the hexagon bolt for robot fastening must be kept free from leveling compound.
12. Set down the robot and align horizontally with leveling screws if necessary.
13. Remove excess leveling compound. The maximum height of the leveling compound must not be exceeded. Observe the manufacturer's specifications.
14. Allow the leveling compound to set in accordance with the manufacturer's specifications.
15. Drill 12 anchor holes in accordance with the manufacturer's specifications and fit the anchors as specified in the instructions for use.

    The instructions for use are enclosed with the anchors and must be followed precisely.

7.1.2 Connecting the connecting cables

Procedure

1. Fasten the ground conductor between the robot controller and the robot to the ground conductor connection with 1 M8 hexagon nut including conical spring washer; tightening torque M_A= 23.0 Nm.
2. Fasten the ground conductor between the system component and the robot to the ground conductor connection with 1 M8 hexagon nut including conical spring washer; tightening torque M_A= 23.0 Nm.
3. Connect data cable:
   - KR C4: X31
   - KR C5: XF31

   When connecting the data cable connectors, it must be ensured that the connector is locked correctly on the robot. Correct locking is achieved by closing the clip (>>> *Fig. 7-2*).
4. Connect motor cable:
   - KR C4: X30
   - KR C5: XD30

   Push on the motor cable connector, insert 4 fastening screws and tighten with tightening torque M_A= 3.0 Nm.
5. Check the equipotential bonding in accordance with VDE 0100 and EN 60204-1.

Further information is contained in the operating and assembly instructions of the robot controller.

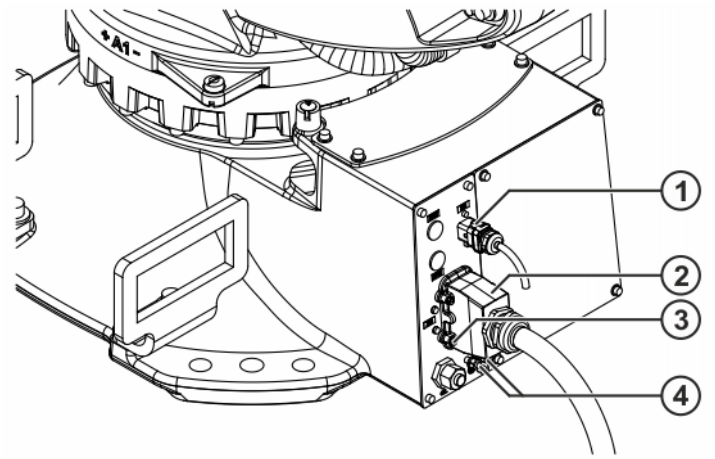

Fig. 7-2: Connecting the connecting cables

1	Data cable	3	Fastening screw (4x)
2	Motor cable	4	Ground conductor

7.1.3 Concluding work

The following concluding work must be carried out:

- Mount tooling, if present.
- Start up the robot system in accordance with the chapter “Start-up and recommissioning” in the operating instructions for the robot controller.

- Put the robot system into operation in accordance with the documentation for the system software.

CAUTION

Sudden escape of air in the counterbalancing system

Following storage of the manipulator, an air cushion can build up in the counterbalancing system. If the air escapes suddenly, this can cause the protective cap of the vent valve to shoot off in exceptional cases. Injuries may result.

1. Remove the protective cap of the counterbalancing system vent valve.
2. Maintain a safe distance.
3. Move A2 by ±30°.
4. Refit the protective cap.

7.2 Starting up floor-mounted robots (optional 150 mm mounting base)

Description

The mounting base is used for installing robots on a foundation.

They are fastened to a suitable concrete foundation using a bedplate / foundation slats and chemical anchors.

This description is valid for the installation of floor-mounted robots with the mounting variant “mounting base”.

If the surface of the concrete foundation is not sufficiently smooth and even, the differences must be evened out with a suitable leveling compound.

When using chemical anchors, use only resin cartridges and anchors from the same manufacturer. No diamond tools or core drills may be used for drilling the anchor holes; for preference, drilling tools supplied by the anchor manufacturer are to be used. Observe also the manufacturer’s instructions for the use of chemical anchors.

The installation and start-up of the robot controller, the tools mounted and the applications are not described here.

Equipment

The following equipment is required:

Designation	Article number
Lifting tackle/rope sling with sufficient load-bearing capacity	0000-382-665
Crane with sufficient load-bearing capacity	-
Fork lift truck with sufficient load-bearing capacity	-
Drill with a ø 18 mm bit	-
Setting tool approved by the anchor manufacturer	-
Set of Allen keys 1.5; 2; 2.5; 3; 4; 5; 6; 8; 10 mm	-
Torque wrench min. 20 to 100 Nm	-

Designation	Article number
Torque wrench min. 400 to 700 Nm	-

Material

The following material is required:

Designation	Article number	Quantity
Mounting base S780	0000-338-338	1

Tightening torques

The tightening torques can be found under: (>>> *12.1 "Tightening torques" Page 385*)

These are valid for screws and nuts where no other specifications are given.

Screws of strength class 10.9 and higher, stainless steel screws of strength class 70 or 80, as well as screws with test certification may only be tightened once with the rated tightening torque. These screws must be replaced with new ones when they are slackened for the first time.

Precondition

- The installation site is accessible with a crane or fork lift truck.
- The robot is in the transport position.
- The substructure has been checked for sufficient safety.
- The concrete foundation must have the required dimensions and cross-section.
- The surface of the foundation must be smooth and even.
- Have the leveling compound readily at hand.
- Any tools or other system components which would hinder the work have been removed.
- The connecting cables and ground conductors are routed to the robot and installed.

Work safety

WARNING

Danger to life and limb due to live parts

When work is performed on this system, live parts can lead to unintentional motions of the robot, positioner or other components. Failure to observe this may result in physical injuries and damage to property.

- If work is carried out on an operable system, the main switch on the control cabinet must be turned to the OFF position and secured with a padlock to prevent unauthorized persons from switching it on again.
- Inform the persons involved by means of a sign (e.g. affix a warning sign).
- Warn all persons concerned before putting the system back into operation.

WARNING

Danger to life and limb due to non-authorized handling equipment

If unsuitable handling equipment is used, the robot may topple or be damaged during transportation. Death, severe injuries or damage to property may result.

- Only use authorized handling equipment with a sufficient load-bearing capacity.
- Only transport the robot in the manner specified here.

WARNING

Risk of injury during transportation

The robot may tip during transportation. Death, severe injuries or damage to property may result.

- When transporting the robot using lifting tackle (optional) / rope sling, care must be exercised to prevent it from tipping.
- If necessary, additional safeguarding measures must be taken.
- It is forbidden to pick up the robot in any other way using a crane!

CAUTION

Risk of injury due to tripping hazards

Improper installation of cables can cause tripping hazards. Injuries or damage to property may result.

- The connecting cables must be installed in such a way (e.g. cable ducts) as to prevent tripping hazards.
- Potential tripping hazards must be marked accordingly.

WARNING

Danger to life and limb due to incorrect mounting

If not mounted correctly, the kinematic system may topple over or fall down. Death, severe injury or damage to property may result.

- Only install the kinematic system using the mounting base or machine frame mounting.
- The stability must be ensured by the integrator or start-up technician.

7.2.1 Installing the robot with mounting base 150 mm (optional)

Procedure

1. Clean the concrete foundation.
2. Screw 2 locating pins into the bedplate with 1 M8x55-8.8 Allen screw each and check that they are fitted securely (>>> *Fig. 7-3*).
3. Lift the robot with the crane or fork lift truck and move it to the installation site.
4. Clean the lower mounting surface on the robot.
5. Fasten the bedplate to the robot using 8 M24x65-8.8 hexagon bolts with conical spring washers. Ensure that an entirely vertical position is maintained in order to prevent damage to the locating pins.
6. Tighten 8 M24x65-8.8 hexagon bolts with torque wrench. Increase the tightening torque to the specified value in several stages.

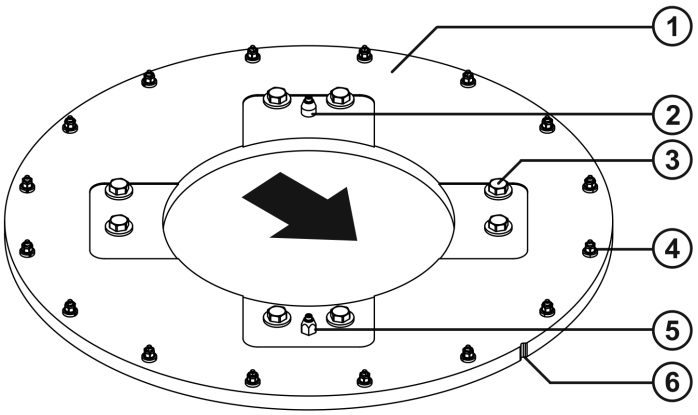

Fig. 7-3: Mounting base

1	Bedplate
2	Locating pin, cylindrical
3	M24x65-8.8-A2K hexagon bolt with conical spring washer (8x)
4	Chemical anchor (16x)
5	Locating pin, flat-sided
6	Orientation notch, zero position

7. Determine the position of the robot on the mounting base in relation to the working envelope.
8. Set the robot down on the mounting base in its installation position.
9. Check the surface of the concrete foundation against the specified value:
   - If the surface is sufficiently smooth and even, continue with step 15.
   - If the surface is not sufficiently smooth and even, continue with step 10.

   If the evenness of the foundation is outside the specified tolerances, this can cause strain or result in loosening of the mounting base.
10. Lift robot with crane or fork lift truck.
11. Apply sufficient leveling compound to the underside of the bedplate (toothed spatula).

    The area under the hexagon bolt for robot fastening must be kept free from leveling compound.
12. Set down the robot and align horizontally with leveling screws if necessary.
13. Remove excess leveling compound. The maximum height of the leveling compound must not be exceeded. Observe the manufacturer's specifications.
14. Allow the leveling compound to set in accordance with the manufacturer's specifications.
15. Drill 16 anchor holes in accordance with the manufacturer's specifications and fit the anchors as specified in the instructions for use.

    The instructions for use are enclosed with the anchors and must be followed precisely.

7.2.2 Connecting the connecting cables

Procedure

1. Fasten the ground conductor between the robot controller and the robot to the ground conductor connection with 1 M8 hexagon nut including conical spring washer; tightening torque M_A= 23.0 Nm.
2. Fasten the ground conductor between the system component and the robot to the ground conductor connection with 1 M8 hexagon nut including conical spring washer; tightening torque M_A= 23.0 Nm.
3. Connect data cable:
   - KR C4: X31
   - KR C5: XF31

   When connecting the data cable connectors, it must be ensured that the connector is locked correctly on the robot. Correct locking is achieved by closing the clip (>>> *Fig. 7-4*).
4. Connect motor cable:
   - KR C4: X30
   - KR C5: XD30

   Push on the motor cable connector, insert 4 fastening screws and tighten with tightening torque M_A= 3.0 Nm.
5. Check the equipotential bonding in accordance with VDE 0100 and EN 60204-1.

Further information is contained in the operating and assembly instructions of the robot controller.

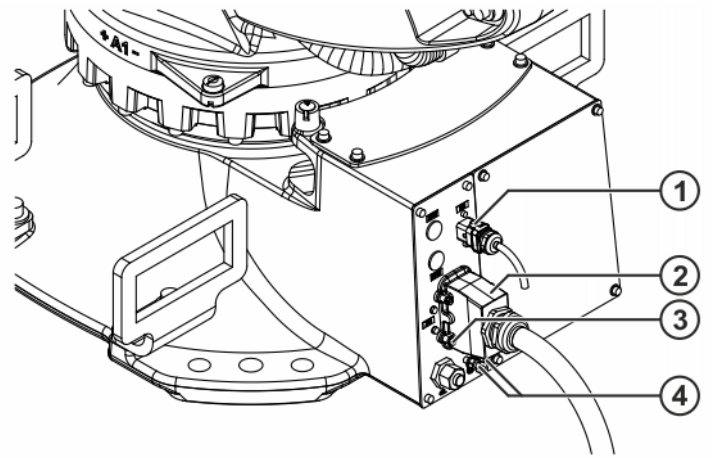

Fig. 7-4: Connecting the connecting cables

1	Data cable	3	Fastening screw (4x)
2	Motor cable	4	Ground conductor

7.2.3 Concluding work

The following concluding work must be carried out:

- Mount tooling, if present.
- Start up the robot system in accordance with the chapter “Start-up and recommissioning” in the operating instructions for the robot controller.

- Put the robot system into operation in accordance with the documentation for the system software.

CAUTION

Sudden escape of air in the counterbalancing system

Following storage of the manipulator, an air cushion can build up in the counterbalancing system. If the air escapes suddenly, this can cause the protective cap of the vent valve to shoot off in exceptional cases. Injuries may result.

1. Remove the protective cap of the counterbalancing system vent valve.
2. Maintain a safe distance.
3. Move A2 by ±30°.
4. Refit the protective cap.

7.3 Starting up robots (machine frame mounting)

Description

The machine frame mounting is used for installing robots on a steel structure prepared by the customer.

Fastening is carried out using 8 hexagon bolts with conical spring washers. A cylindrical pin and a flat-sided pin are provided to ensure correct positioning.

This description is valid for the installation of floor and ceiling-mounted robots with the mounting variant “machine frame mounting”.

The ceiling-mounted installation is analogous to installation of the floor-mounted robot. For installation on the ceiling, the robot can be transported in a transport frame – already in the correct orientation. It is removed from this frame by fork lift truck and brought to the site of installation. The robot must be secured to the ceiling by the fork lift truck until the robot is completely bolted in place.

The installation and start-up of the robot controller, the tools mounted and the applications are not described here.

Equipment

The following equipment is required:

Designation	Article number
Lifting tackle/rope sling with sufficient load-bearing capacity	0000-382-665
Crane with sufficient load-bearing capacity	-
Fork lift truck with sufficient load-bearing capacity	-
Set of Allen keys 1.5; 2; 2.5; 3; 4; 5; 6; 8; 10 mm	-
Torque wrench min. 2 to 20 Nm	-
Torque wrench min. 400 to 700 Nm	-

Material

The following material is required:

Designation	Article number	Quantity
Machine frame mounting	0000-310-641	1

Tightening torques

The tightening torques can be found under: (>>> *12.1 "Tightening torques" Page 385*)

These are valid for screws and nuts where no other specifications are given.

Screws of strength class 10.9 and higher, stainless steel screws of strength class 70 or 80, as well as screws with test certification may only be tightened once with the rated tightening torque. These screws must be replaced with new ones when they are slackened for the first time.

Precondition

- The installation site is accessible with a crane or fork lift truck.
- The robot is in the transport position.
- The substructure has been checked for sufficient safety.
- The mounting surface has been prepared.
- Any tools or other system components which would hinder the work have been removed.
- The connecting cables and ground conductors are routed to the robot and installed.

Work safety

WARNING

Danger to life and limb due to live parts

When work is performed on this system, live parts can lead to unintentional motions of the robot, positioner or other components. Failure to observe this may result in physical injuries and damage to property.

- If work is carried out on an operable system, the main switch on the control cabinet must be turned to the OFF position and secured with a padlock to prevent unauthorized persons from switching it on again.
- Inform the persons involved by means of a sign (e.g. affix a warning sign).
- Warn all persons concerned before putting the system back into operation.

WARNING

Danger to life and limb due to non-authorized handling equipment

If unsuitable handling equipment is used, the robot may topple or be damaged during transportation. Death, severe injuries or damage to property may result.

- Only use authorized handling equipment with a sufficient load-bearing capacity.
- Only transport the robot in the manner specified here.

WARNING

Risk of injury during transportation

The robot may tip during transportation. Death, severe injuries or damage to property may result.

- When transporting the robot using lifting tackle (optional) / rope sling, care must be exercised to prevent it from tipping.
- If necessary, additional safeguarding measures must be taken.
- It is forbidden to pick up the robot in any other way using a crane!

CAUTION

Risk of injury due to tripping hazards

Improper installation of cables can cause tripping hazards. Injuries or damage to property may result.

- The connecting cables must be installed in such a way (e.g. cable ducts) as to prevent tripping hazards.
- Potential tripping hazards must be marked accordingly.

WARNING

Danger to life and limb due to incorrect mounting

If not mounted correctly, the kinematic system may topple over or fall down. Death, severe injury or damage to property may result.

- Only install the kinematic system using the mounting base or machine frame mounting.
- The stability must be ensured by the integrator or start-up technician.

7.3.1 Installing the robot with the machine frame mounting assembly

Procedure

1. Clean the mounting surface.
2. Check the hole pattern on the mounting surface.
3. Screw 2 locating pins into the mounting surface and check that they are fitted securely.
4. Lift the robot with the crane or fork lift truck and move it to the installation site.
5. Clean the lower mounting surface on the robot.
6. Lower the robot vertically onto the mounting surface. Ensure that an entirely vertical position is maintained in order to prevent damage to the locating pins.
7. Insert 8 M24x65-8.8 hexagon bolts together with conical spring washers.
8. Tighten the 8 M24x65-8.8 hexagon bolts with a torque wrench in diagonally opposite sequence. Increase the tightening torque to the specified value in several stages.

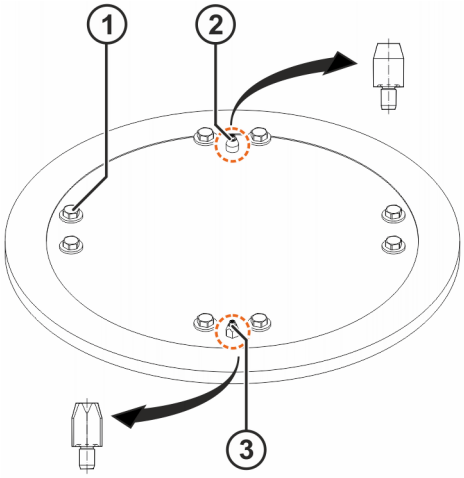

Fig. 7-5: Machine frame mounting

1 M24x65-8.8-A2K hexagon bolt (8x)
2 Locating pin, cylindrical
3 Locating pin, flat-sided

7.3.2 Connecting the connecting cables

Procedure

1. Fasten the ground conductor between the robot controller and the robot to the ground conductor connection with 1 M8 hexagon nut including conical spring washer; tightening torque M_A= 23.0 Nm.
2. Fasten the ground conductor between the system component and the robot to the ground conductor connection with 1 M8 hexagon nut including conical spring washer; tightening torque M_A= 23.0 Nm.
3. Connect data cable:
   - KR C4: X31
   - KR C5: XF31

   When connecting the data cable connectors, it must be ensured that the connector is locked correctly on the robot. Correct locking is achieved by closing the clip (>>> *Fig. 7-6*).
4. Connect motor cable:
   - KR C4: X30
   - KR C5: XD30

   Push on the motor cable connector, insert 4 fastening screws and tighten with tightening torque M_A= 3.0 Nm.
5. Check the equipotential bonding in accordance with VDE 0100 and EN 60204-1.

Further information is contained in the operating and assembly instructions of the robot controller.

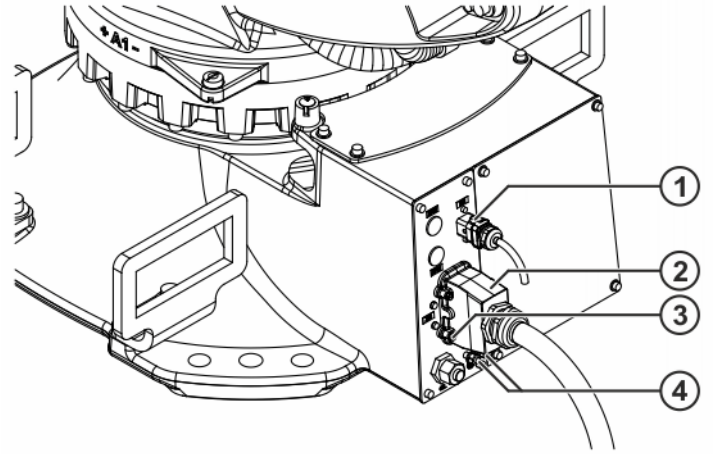

Fig. 7-6: Connecting the connecting cables

1 Data cable	3 Fastening screw (4x)
2 Motor cable	4 Ground conductor

7.3.3 Concluding work

The following concluding work must be carried out:

- Mount tooling, if present.
- Start up the robot system in accordance with the chapter “Start-up and recommissioning” in the operating instructions for the robot controller.
- Put the robot system into operation in accordance with the documentation for the system software.

CAUTION

Sudden escape of air in the counterbalancing system

Following storage of the manipulator, an air cushion can build up in the counterbalancing system. If the air escapes suddenly, this can cause the protective cap of the vent valve to shoot off in exceptional cases. Injuries may result.

1. Remove the protective cap of the counterbalancing system vent valve.
2. Maintain a safe distance.
3. Move A2 by ±30°.
4. Refit the protective cap.

7.4 Description of the connecting cables, KR C4

Configuration

The connecting cables are used to transfer power and data between the robot controller and the robot.

The connecting cables comprise:

- Motor cable
- Data cable

Interface

Cable designation	Connector designation robot controller - robot	Interface with robot
Motor cable	X20 – X30	Han® 16HP
Data cable	X21 – X31	Han® 3A Q12
Ground conductor / equipotential bonding 16 mm^2		M8 ring cable lug at both ends

Standard connecting cable

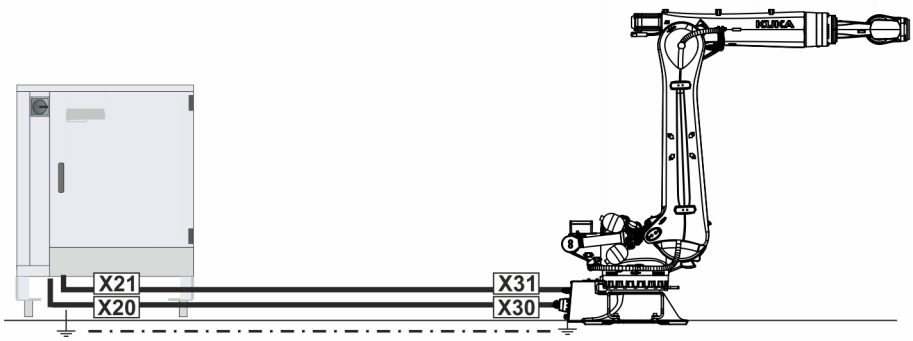

Fig. 7-7: Connecting cables, overview

7.4.1 Description of the Motor cable

Cable overview

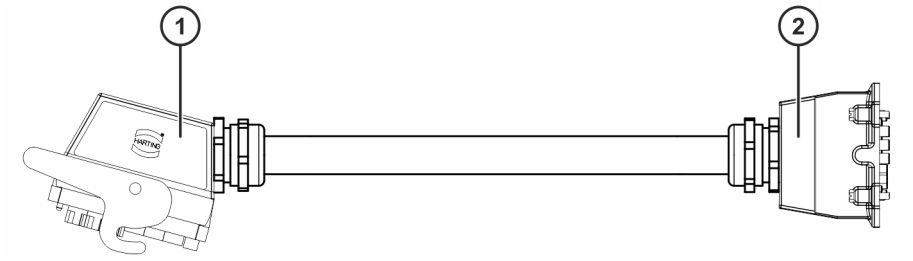

Fig. 7-8: Motor cable

1 X20
2 X30

Connector pin allocation

Connector pin allocation X20	Connector pin allocation X30
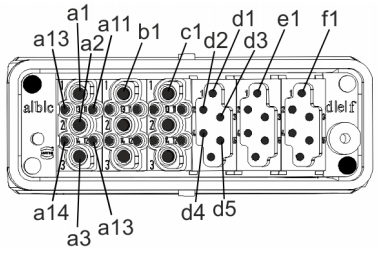	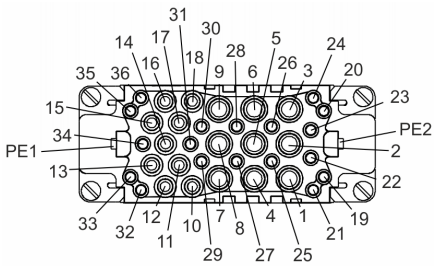

The contact assignment on the connector side is shown in each case.

Wiring diagram

X20 Pin	Description		X30 Pin
a1	Motor M1 U		1
2	Motor M1 V		2
3	Motor M1 W		3
11	Brake +		19
12	Brake -		20
b1	Motor M2 U		4
2	Motor M2 V		5
3	Motor M2 W		6
11	Brake +		21
12	Brake -		22
c1	Motor M3 U		7
2	Motor M3 V		8
3	Motor M3 W		9
11	Brake +		23
12	Brake -		24
d1	Motor M4 U		10
4	Motor M4 V		11
6	Motor M4 W		12
3	Brake +		25
5	Brake -		26
e1	Motor M5 U		13
4	Motor M5 V		14
6	Motor M5 W		15
3	Brake +		27
5	Brake -		28
f1	Motor M5 U		16
4	Motor M5 V		17
6	Motor M5 W		18
3	Brake +		29
5	Brake -		30
	Ground conductor		
Housing	Shield, all pins		Housing

7.4.2 Description of the Data cable

Cable overview

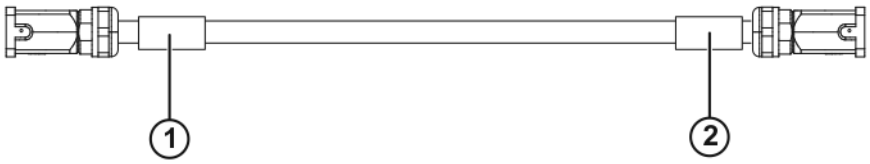

Fig. 7-9: Data cable

1 X21
2 X31

Connector pin allocation

Connector pin allocation X21	Connector pin allocation X31

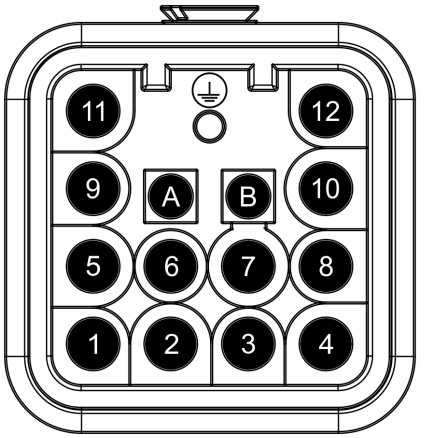

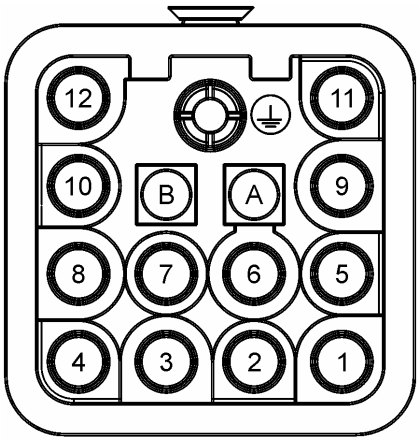

The contact assignment on the connector side is shown in each case.

Wiring diagram

X21 Pin	Description		X31 Pin
9	TPFO_P		9
11	TPFO_N		11
Housing	Shield, pin 9, pin 11		Housing
10	TPFI_P		10
12	TPFI_N		12
Housing	Shield, pin 10, pin 12		Housing
3	Ground		3
2	24 V/PS1 with battery back-up		2
Housing	Shield, all pins		Housing

7.4.3 Description of the ground conductor

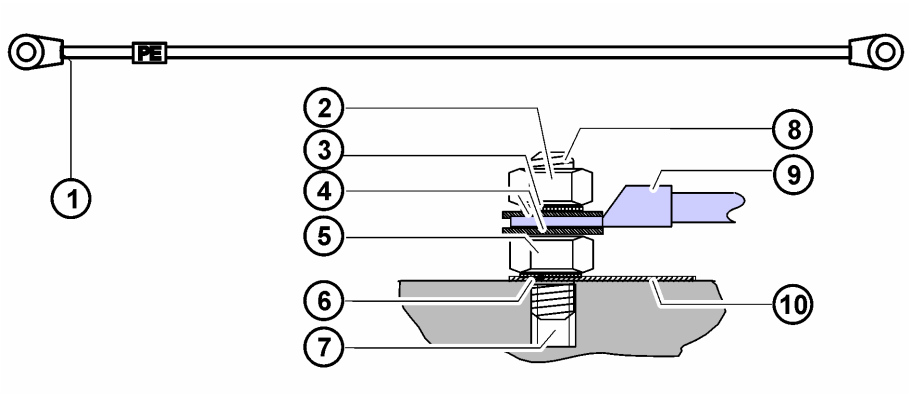

Fig. 7-10: Connecting cable, ground conductor

1	Ground conductor	6	Conical spring washer
2	Hexagon nut	7	Robot
3	Conical spring washer	8	Setscrew
4	2x plain washer	9	Ground conductor connection Ring cable lug
5	Hexagon nut	10	Ground sign

7.5 Description of the connecting cables, KR C5

Configuration

The connecting cables are used to transfer power and data between the robot controller and the robot.

The connecting cables comprise:

- Motor cable
- Data cable

Interface

Cable designation	Connector designation robot controller - robot	Interface with robot
Motor cable	6 motor connectors: XD20.1 … XD20.6 - XD30 2 brake connectors: XD10.1, XD10.2 - XD30	Han® 16HP
Data cable	XF21 – XF31	Han® 3A Q12
Ground conductor / equipotential bonding 16 mm^2		M8 ring cable lug at both ends

Standard connecting cable

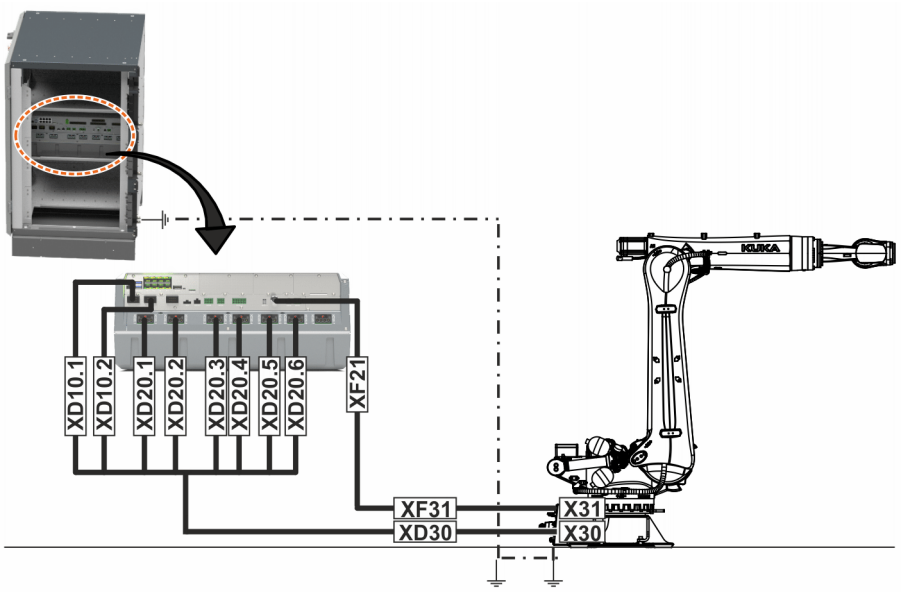

Fig. 7-11: Connecting cables, overview

7.5.1 Description of the Motor cable

Cable overview

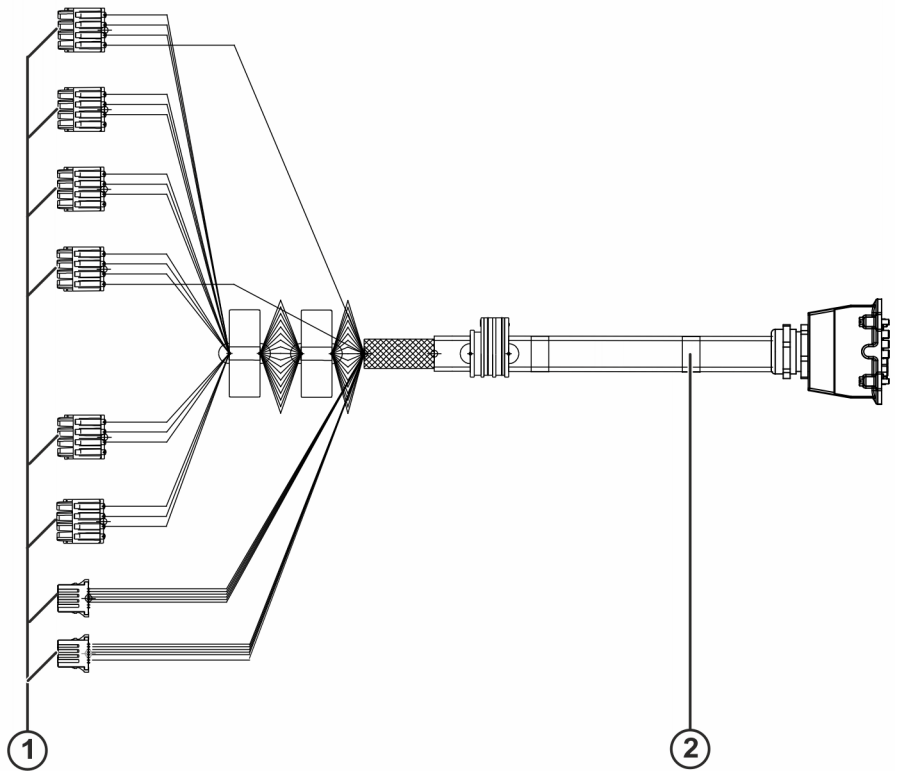

Fig. 7-12: Motor cable

1 XD20.x / XD10.x
2 XD30

Connector pin allocation

Connector pin allocation XD20.x / XD10.x	Connector pin allocation XD30
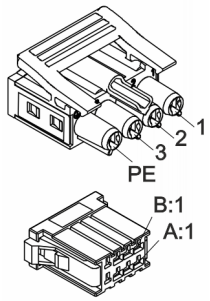	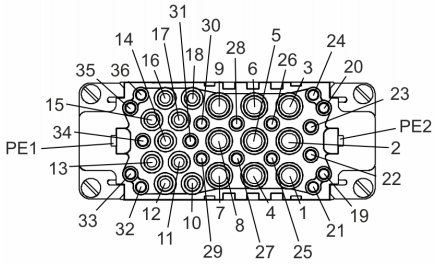

The contact assignment on the connector side is shown in each case.

Wiring diagram

XD20.x / XD10.x Pin	Description		XD30 Pin
XD20.1 / 1	M1:U		1
XD20.1 / 2	M1:V		2
XD20.1 / 3	M1:W		3
XD20.1 / PE	PE		PE1
XD10.1 / B:1	M1_br_+	twisted	19
XD10.1 / A:1	M1_br_GND		20
Housing	Shield B1, A1		Housing
XD20.2 / 1	M2:U		4
XD20.2 / 2	M2:V		5
XD20.2 / 3	M2:W		6
XD10.1 / B:2	M2_br_+	twisted	21
XD10.1 / A:2	M2_br_GND		22
Housing	Shield B2, A2		Housing
XD20.3 / 1	M3:U		7
XD20.3 / 2	M3:V		8
XD20.3 / 3	M3:W		9
XD10.1 / B:3	M3_br_+	twisted	23
XD10.1 / A:3	M3_br_GND		24
Housing	Shield B3, A3		Housing
XD20.4 / 1	M4:U		10
XD20.4 / 2	M4:V		11
XD20.4 / 3	M4:W		12

XD20.x / XD10.x Pin	Description		XD30 Pin
XD20.4 / PE	PE		PE2
XD10.2 / B:2	M4_br_+	twisted	25
XD10.2 / A:1	M4_br_GND		26
Housing	Shield B2, A1		Housing
XD20.5 / 1	M5:U		13
XD20.5 / 2	M5:V		14
XD20.5 / 3	M5:W		15
XD10.2 / A:2	M5_br_+	twisted	27
XD10.2 / A:1	M5_br_GND		28
Housing	Shield A2, A1		Housing
XD20.6 / 1	M6:U		16
XD20.6 / 2	M6:V		17
XD20.6 / 3	M6:W		18
XD10.2 / A:3	M6_br_+	twisted	29
XD10.2 / A:4	M6_br_GND		30
Housing	Shield A3, A4		Housing
Housing	Overall shield		

7.5.2 Description of the Data cable

Cable overview

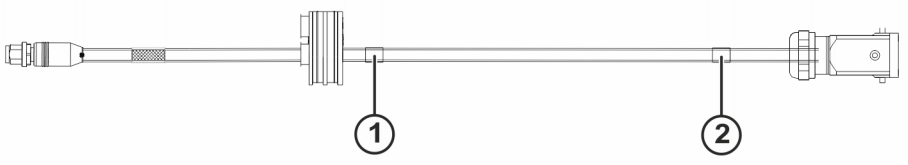

Fig. 7-13: Data cable

1 XF21
2 XF31

Connector pin allocation

Connector pin allocation XF21	Connector pin allocation XF31
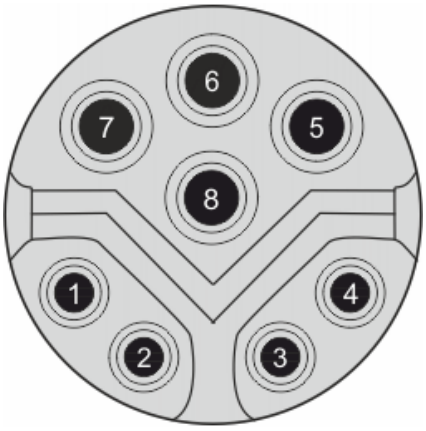	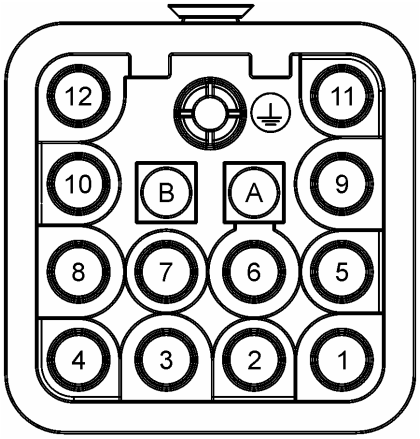

The contact assignment on the connector side is shown in each case.

Wiring diagram

XF21 Pin	Description		XF31 Pin
5	PSU_27V_IO		5
6	PSU_GND		6
7	PSU_27V_POS		2
8	PSU_GND		3
1	Rx+		10
2	Rx-		12
3	Tx+		9
4	Tx-		11
Housing	Shield, all pins		Housing

7.5.3 Description of the ground conductor

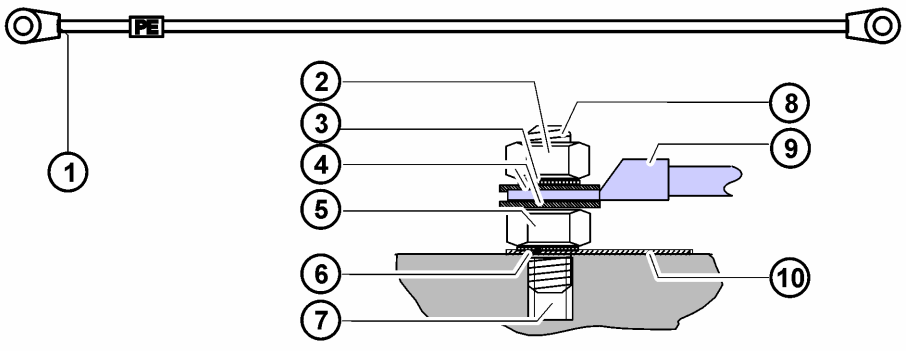

Fig. 7-14: Connecting cable, ground conductor

1	Ground conductor	6	Conical spring washer
2	Hexagon nut	7	Robot
3	Conical spring washer	8	Setscrew

4	2x plain washer	9	Ground conductor connection Ring cable lug
5	Hexagon nut	10	Ground sign

8 Maintenance

Only maintenance and repair work described in this document may be performed.

Work that exceeds this scope may only be carried out by personnel specially trained by KUKA.

Information about KUKA College and its training program can be found at college.kuka.com or can be obtained directly from our subsidiaries.

In the case of support and repair services provided by KUKA, KUKA Service must be informed in advance about potential contamination or hazards.

Non-compliance nullifies warranty and liability claims.

8.1 Maintenance overview

Description

The maintenance intervals given in the tables are valid for the operating conditions specified in the technical data (>>> *4 "Technical data" Page 33*). KUKA Deutschland must be consulted in the event of deviations in working conditions or the use of special functions or applications.

Further information can be found in the section “Information for planning” (>>> *5.1 "Information for planning" Page 177*).

A general inspection of the manipulator is recommended after 7 years or upon modifying its use. Please contact KUKA Service for this.

If the robot is fitted with a KUKA energy supply system (optional), additional maintenance work must be carried out.

NOTICE

Only auxiliary substances and consumables approved by KUKA Deutschland GmbH may be used. Non-approved auxiliary substances and consumables may cause premature wear and failure of assemblies.

Precondition

- The maintenance points must be freely accessible.
- Remove the tools and any additional items of equipment if they impede maintenance work.

WARNING

Danger to life and limb due to unintended robot motions

When carrying out the following work, the robot must be moved several times between the individual work steps. Unintentional movements of the robot can cause death, serious injury or material damage.

- While work is being carried out on the robot, it must always be secured by actuating the EMERGENCY STOP device.
- If work is carried out on an operational robot that is switched on, the robot must only be moved at reduced velocity. It must be possible to stop the robot at any time by actuating an EMERGENCY STOP device. Operation must be limited to what is absolutely necessary.
- Warn all persons concerned before switching on and moving the robot.

If oil temperatures of more than 60 °C (333 K) are reached during operation, shorter maintenance intervals must be observed. Please contact KUKA Service for this.

8.1.1 Maintenance table

Maintenance symbols

The overview may contain maintenance symbols that are not relevant for the maintenance work on this product. The maintenance illustrations provide an overview of the relevant maintenance work.



Oil change



Lubricate with grease gun



Lubricate with brush



Lubricate with spray grease



Tighten screw/nut



Check component, visual inspection



Clean component



Exchange battery



Exchange component



Check toothed belt tension

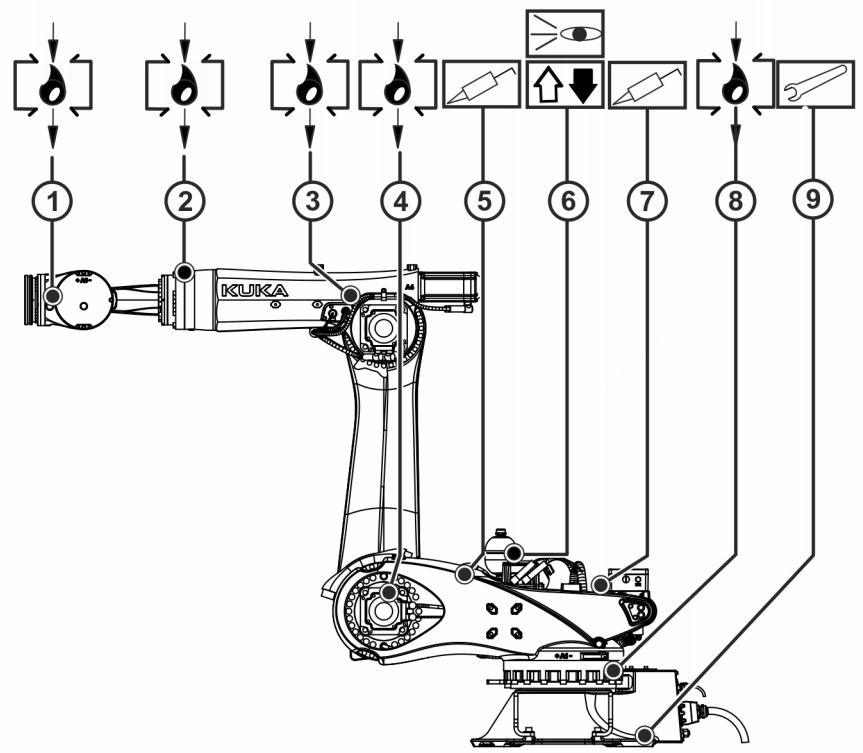

Fig. 8-1: Maintenance diagram

Maintenance table, KR QUANTEC-2 K

Interval	Item	Task	Auxiliary substances and consumables
100 h once after start-up and recommissioning	9	Check tightening torque for fastening screws and nuts.	-
5000 h or 1 year at the latest 1)	5	Counterbalancing system bearing on link arm, lubricate. Grease lubricating nipples in middle position and at plus and minus end positions (1 nipple in each case).	LGEP 2 lubricating grease 10 cm³
5000 h or 1 year at the latest 1)	7	Counterbalancing system bearing on rotating column, lubricate. Grease lubricating nipples in middle position and at plus and minus end positions (1 nipple in each case).	LGEP 2 lubricating grease 10 cm³
5000 h	6	Counterbalancing system, check pressure (>>> *8.8 "Checking the counterbalancing system" Page 247*)	-
20000 h or 5 years at the latest	1	Perform oil change on gear units A5/A6. (>>> *8.7 "Oil change in A5/A6" Page 242*)	Optigear Synt. ALR 150 Initial filling quantity: 1.40 l for in-line wrist type ZH210 and ZH120 HV400 1.90 l for in-line wrist type ZH300

Interval	Item	Task	Auxiliary substances and consumables
20000 h or 5 years at the latest	2	Perform oil change on gear unit A4. (>>> *8.6 "Oil change in A4" Page 238*)	Optigear Synt. ALR 150 Initial filling quantity: 2.10 l
20000 h or 5 years at the latest	3	Perform oil change on gear unit A3. (>>> *8.5 "Oil change in A3" Page 234*)	Optigear Synt. ALR 150 Initial filling quantity: 1.40 l
20000 h or 5 years at the latest	4	Perform oil change on gear unit A2. (>>> *8.4 "Oil change in A2" Page 230*)	Optigear Synt. ALR 150 Initial filling quantity: 2.90 l
20000 h or 5 years at the latest	8	Perform oil change on gear unit A1. (>>> *8.2 "Oil change in A1" Page 223*) (>>> *8.3 "Oil change in A1, ceiling-mounted robot" Page 227*)	Optigear Synt. ALR 150 Initial filling quantity: 6.30 l for floor-mounted robots Initial filling quantity: 8.80 l for ceiling-mounted robots
10 years	6	Exchange the counterbalancing system (>>> *8.9 "Exchanging the counterbalancing system" Page 249*) (>>> *8.10 "Exchanging the counterbalancing system on a ceiling-mounted robot" Page 258*)	-

1) In the case of frequently recurring, short-distance movements, the maintenance interval is 3 000 hours.

Maintenance table, KR QUANTEC-2 K-F

Interval	Item	Task	Auxiliary substances and consumables
100 h once after start-up and recommissioning	9	Check tightening torque for fastening screws and nuts.	-
2 500 h or 1 year at the latest	5	Counterbalancing system bearing on link arm, lubricate. Grease lubricating nipples in middle position and at plus and minus end positions (1 nipple in each case).	LGEP 2 lubricating grease 10 cm^3
2 500 h or 1 year at the latest	7	Counterbalancing system bearing on rotating column, lubricate. Grease lubricating nipples in middle position and at plus and minus end positions (1 nipple in each case).	LGEP 2 lubricating grease 10 cm^3
2 500 h	6	Counterbalancing system, check pressure (>>> *8.8 "Checking the counterbalancing system" Page 247*)	Hyspin ZZ 46 hydraulic oil
10 000 h or 5 years at the latest	1	Perform oil change on gear units A5/A6. (>>> *8.7 "Oil change in A5/A6" Page 242*)	Optigear Synt. ALR 150 Initial filling quantity: 1.90 l for in-line wrist type ZH300 F 1.40 l for in-line wrist type ZH210 F

Interval	Item	Task	Auxiliary substances and consumables
10 000 h or 5 years at the latest	2	Perform oil change on gear unit A4. (>>> *8.6 "Oil change in A4" Page 238*)	Optigear Synt. ALR 150 Initial filling quantity: 2.10 l
10 000 h or 5 years at the latest	3	Perform oil change on gear unit A3. (>>> *8.5 "Oil change in A3" Page 234*)	Optigear Synt. ALR 150 Initial filling quantity: 1.40 l
10 000 h or 5 years at the latest	4	Perform oil change on gear unit A2. (>>> *8.4 "Oil change in A2" Page 230*)	Optigear Synt. ALR 150 Initial filling quantity: 2.90 l
10 000 h or 5 years at the latest	8	Perform oil change on gear unit A1. (>>> *8.2 "Oil change in A1" Page 223*) (>>> *8.3 "Oil change in A1, ceiling-mounted robot" Page 227*)	Optigear Synt. ALR 150 Initial filling quantity: 6.30 l
10 years	6	Exchange the counterbalancing system. (>>> *8.9 "Exchanging the counterbalancing system" Page 249*)	-

Up-to-date safety data sheets must be requested from the manufacturers of auxiliary and operating materials. Further information about the auxiliary substances and consumables used can be found under:

(>>> *12.2 "Auxiliary substances and consumables used" Page 386*)

The service life of the cable set corresponds to that of the robot, provided that programs are executed in the normal range. If, however, the programs are at the limits, the service life of the cable set is reduced and it may be necessary to exchange the cable set prematurely.

8.2 Oil change in A1

Description

The following sections describe the A1 gear oil change.

Equipment

The following equipment is required:

Designation	Article number
Set of Allen keys 1.5; 2; 2.5; 3; 4; 5; 6; 8; 10 mm	-
Torque wrench min. 20 to 100 Nm	-
Socket wrench set	-
Receptacle	-
KUKA oil pump	0000-180-812

Material

The following material is required:

Designation	Article number	Quantity
Optigear Synt. ALR 150	(>>> *12.2 "Auxiliary substances and consumables used" Page 386*)	Initial filling quantity: 6.30 l

Refilling quantity

CAUTION

The quantity of oil drained depends on the draining time and the oil temperature. The refilling quantity is the quantity of oil that was drained from the gear unit at the correct operating temperature and with the correct draining time. This oil quantity must be determined. Only this quantity of oil may be used when refilling.
If less than 70 % of the specified oil quantity flows out, flush the gear unit with the determined quantity of drained oil once, then pour in the amount of oil that was drained. If less than 50% of the specified oil quantity flows out (e.g. inclined installation), the flushing operation must be repeated twice. During the flushing procedure, move the axis at jog velocity throughout the entire axis range.
The oil quantities specified in the table correspond to the oil quantities in the gear unit at first filling.

Tightening torques

The tightening torques can be found under: (>>> *12.1 "Tightening torques" Page 385*)

These are valid for screws and nuts where no other specifications are given.

Screws of strength class 10.9 and higher, stainless steel screws of strength class 70 or 80, as well as screws with test certification may only be tightened once with the rated tightening torque. These screws must be replaced with new ones when they are slackened for the first time.

Preconditions

- The gear unit is at operating temperature.
- The oil filler hole (magnetic screw plug) in the rotating column is freely accessible; any covers must be removed beforehand.

Arbeitssicherheit

CAUTION

High oil and surface temperatures after the machine has stopped operating

Immediately after the machine has stopped operating, it is liable to have high oil and surface temperatures. Touching them may result in burns.

- Wear personal protective equipment.

CAUTION

Oil chamber could be pressurized

Under certain conditions, the oil chambers of the gear units may be pressurized. This can result in a sudden oil leak when the oil drain plug is opened and lead to injuries and damage to property.

- Vent the oil chamber before draining the oil.
- Wear personal protective equipment.

WARNING

Danger to life and limb due to unintended robot motions

Unintended robot motions may result in death, severe injuries and damage to property.

- Secure the robot by pressing the EMERGENCY STOP device.
- Warn all persons concerned before starting to put it back into operation.

To ensure safe use of our products, we recommend regularly requesting up-to-date safety data sheets from the manufacturers of auxiliary and operating materials.

8.2.1 Draining the gear oil from A1

Procedure

1. Place a suitable receptacle under the drain hole (>>> *Fig. 8-2*).
2. Carefully unscrew the M22x1.5 magnetic screw plug on the rotating column for venting and close it again.
3. Unscrew the union nut from the drain hole.
4. Remove the M22x1.5 magnetic screw plug from the rotating column for venting and catch the oil as it drains out.
5. Measure the amount of oil drained and store or dispose of the used oil in accordance with the pertinent regulations.

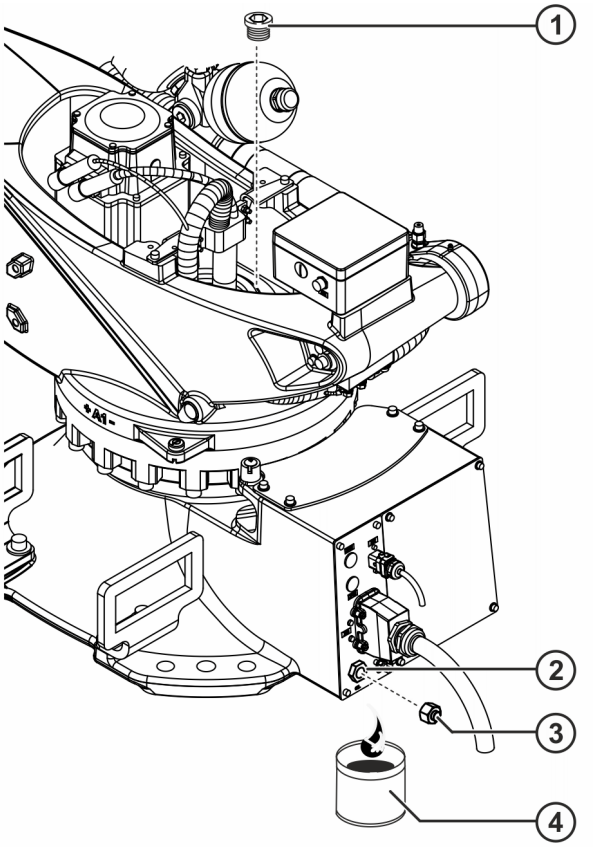

Fig. 8-2: Draining the gear oil from A1

1	Magnetic screw plug M22x1.5	2	Drain hole
3	Union nut	4	Collection receptacle

8.2.2 Filling gear unit A1 with gear oil

1. Connect the oil pump to the drain hole (>>> *Fig. 8-3*).
2. Fill the specified amount of oil from below via the drain hole using the oil pump.
   Check the oil level: the oil should reach the lower edge of the inspection window.
3. Clean the magnetic screw plug and check the sealing element; exchange the magnetic screw plug if damaged.
4. Insert and tighten the M22x1.5 magnetic screw plug; M_A= 25 Nm.
5. Remove the oil pump from the drain hole.
6. Screw the union nut onto the drain hole and tighten; M_A = 45 Nm, then check for leaks.

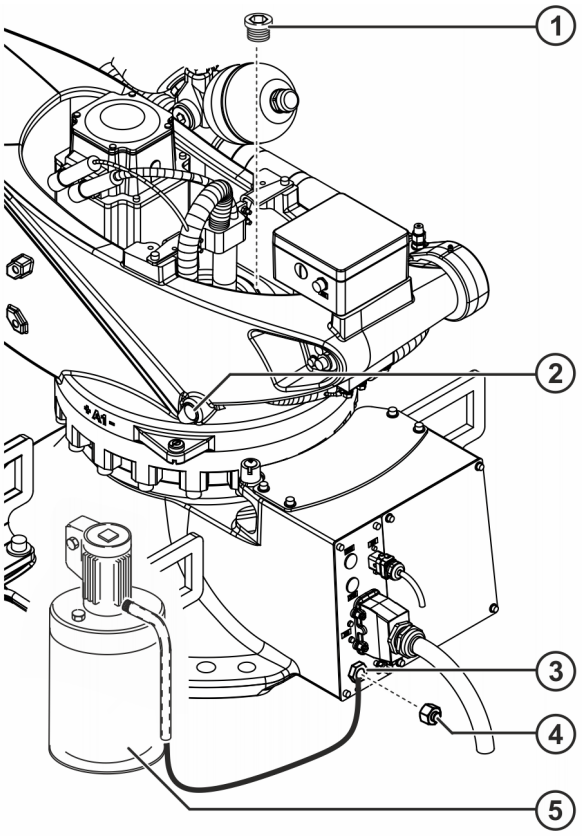

Fig. 8-3: Filling gear unit A1 with gear oil

1	Magnetic screw plug M22x1.5	4	Union nut
2	Oil level inspection window	5	Oil pump
3	Drain hole		

8.2.3 Concluding work

The following concluding work must be carried out:

- Remove oil residue.
- Visual inspection, check for leaks.
- Run the program in T1 mode and look out for irregularities.

8.3 Oil change in A1, ceiling-mounted robot

Description

The following sections describe the A1 gear oil change on a ceiling-mounted robot.

Equipment

The following equipment is required:

Designation	Article number
Set of Allen keys 1.5; 2; 2.5; 3; 4; 5; 6; 8; 10 mm	-
Torque wrench min. 20 to 100 Nm	-
Socket wrench set	-
Receptacle	-
KUKA oil pump	0000-180-812
Oil drain hose	0000-158-094

Material

The following material is required:

Designation	Article number	Quantity
Optigear Synt. ALR 150	(>>> *12.2 "Auxiliary substances and consumables used" Page 386*)	Initial filling quantity: 8.80 l

Refilling quantity

CAUTION

The quantity of oil drained depends on the draining time and the oil temperature. The refilling quantity is the quantity of oil that was drained from the gear unit at the correct operating temperature and with the correct draining time. This oil quantity must be determined. Only this quantity of oil may be used when refilling.
If less than 70 % of the specified oil quantity flows out, flush the gear unit with the determined quantity of drained oil once, then pour in the amount of oil that was drained. If less than 50% of the specified oil quantity flows out (e.g. inclined installation), the flushing operation must be repeated twice. During the flushing procedure, move the axis at jog velocity throughout the entire axis range.
The oil quantities specified in the table correspond to the oil quantities in the gear unit at first filling.

Tightening torques

The tightening torques can be found under: (>>> *12.1 "Tightening torques" Page 385*)

These are valid for screws and nuts where no other specifications are given.

Screws of strength class 10.9 and higher, stainless steel screws of strength class 70 or 80, as well as screws with test certification may only

be tightened once with the rated tightening torque. These screws must be replaced with new ones when they are slackened for the first time.

Preconditions

- The gear unit is at operating temperature.
- The oil filler hole (magnetic screw plug) in the rotating column is freely accessible; any covers must be removed beforehand.

Arbeitssicherheit

CAUTION

High oil and surface temperatures after the machine has stopped operating

Immediately after the machine has stopped operating, it is liable to have high oil and surface temperatures. Touching them may result in burns.

- Wear personal protective equipment.

CAUTION

Oil chamber could be pressurized

Under certain conditions, the oil chambers of the gear units may be pressurized. This can result in a sudden oil leak when the oil drain plug is opened and lead to injuries and damage to property.

- Vent the oil chamber before draining the oil.
- Wear personal protective equipment.

WARNING

Danger to life and limb due to unintended robot motions

Unintended robot motions may result in death, severe injuries and damage to property.

- Secure the robot by pressing the EMERGENCY STOP device.
- Warn all persons concerned before starting to put it back into operation.

To ensure safe use of our products, we recommend regularly requesting up-to-date safety data sheets from the manufacturers of auxiliary and operating materials.

8.3.1 Draining the gear oil from A1

Procedure

1. Place a suitable receptacle under the installed oil drain hose on the rotating column (>>> *Fig. 8-4*).
2. Connect the oil drain hose to the quick coupling at interface A1, carefully press it in for venting and then disconnect it again.
3. Unscrew the union nut from the installed oil drain hose on the rotating column.
4. Connect the oil drain hose to the quick coupling at interface A1 and press in for venting. Catch the oil as it drains out.
5. Measure the amount of oil drained and store or dispose of the used oil in accordance with the pertinent regulations.

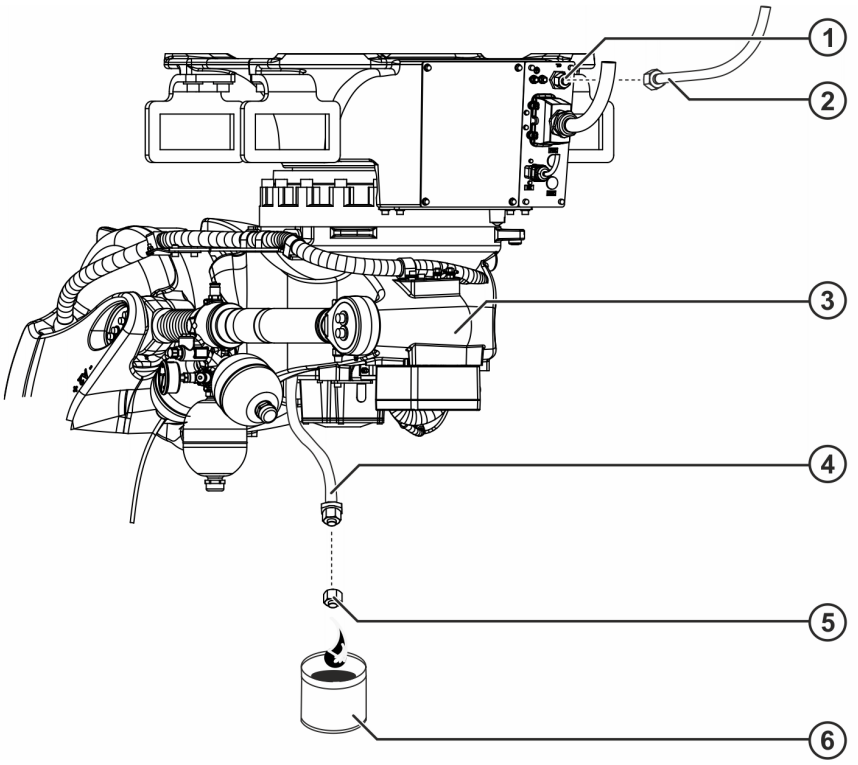

Fig. 8-4: Draining the gear oil from A1

1	Quick coupling
2	Oil drain hose
3	Rotating column
4	Oil drain hose, installed
5	Union nut
6	Collection receptacle

6. Disconnect the oil drain hose from the quick coupling at interface A1.

8.3.2 Filling gear unit A1 with gear oil

1. Connect the oil drain hose to the quick coupling and press in for venting (>>> *Fig. 8-5*).
2. Connect the oil pump to the oil drain hose on the rotating column.
3. Fill the specified amount of oil from below via the oil drain hose using the oil pump.
4. Disconnect the oil drain hose from the quick coupling.
5. Remove the oil pump from the drain hole.
6. Screw the union nut onto the installed oil drain hose on the rotating column and tighten; M_A= 45 Nm, then check for leaks.

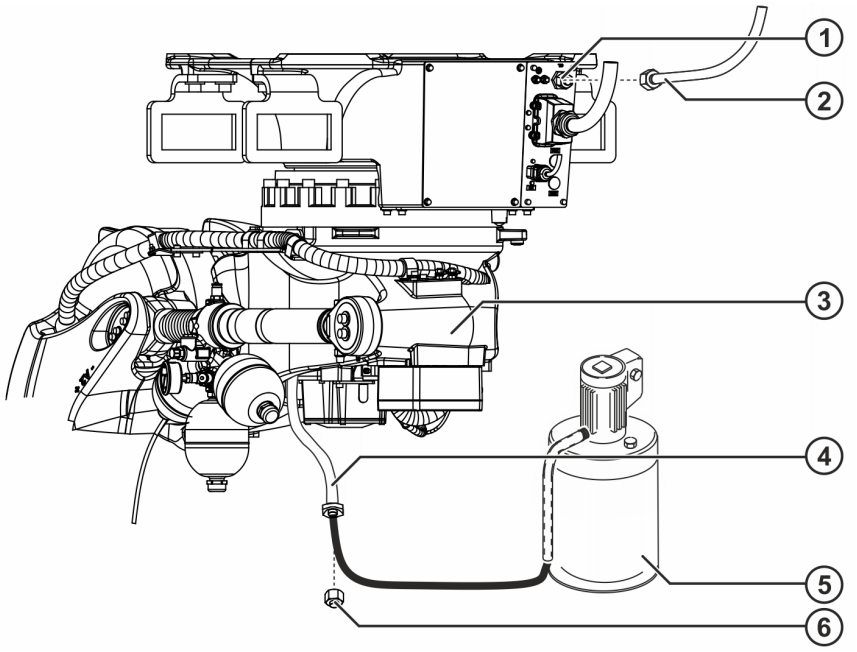

Fig. 8-5: Filling the gear oil on A1

1 Quick coupling
2 Oil drain hose
3 Rotating column
4 Oil drain hose, installed
5 Oil pump
6 Union nut

8.3.3 Concluding work

The following concluding work must be carried out:

- Remove oil residue.
- Visual inspection, check for leaks.
- Run the program in T1 mode and look out for irregularities.

8.4 Oil change in A2

Description

The following sections describe the A2 gear oil change.

Equipment

The following equipment is required:

Designation	Article number
Set of Allen keys 1.5; 2; 2.5; 3; 4; 5; 6; 8; 10 mm	-
Torque wrench min. 20 to 100 Nm	-
Socket wrench set	-
Receptacle	-

Designation	Article number
KUKA oil pump	0000-180-812

Material

The following material is required:

Designation	Article number	Quantity
Optigear Synt. ALR 150	(>>> *12.2 "Auxiliary substances and consumables used" Page 386*)	Initial filling quantity: 2.90 l

Refilling quantity

CAUTION

The quantity of oil drained depends on the draining time and the oil temperature. The refilling quantity is the quantity of oil that was drained from the gear unit at the correct operating temperature and with the correct draining time. This oil quantity must be determined. Only this quantity of oil may be used when refilling.
If less than 70 % of the specified oil quantity flows out, flush the gear unit with the determined quantity of drained oil once, then pour in the amount of oil that was drained. If less than 50% of the specified oil quantity flows out (e.g. inclined installation), the flushing operation must be repeated twice. During the flushing procedure, move the axis at jog velocity throughout the entire axis range.
The oil quantities specified in the table correspond to the oil quantities in the gear unit at first filling.

Tightening torques

The tightening torques can be found under: (>>> *12.1 "Tightening torques" Page 385*)

These are valid for screws and nuts where no other specifications are given.

Screws of strength class 10.9 and higher, stainless steel screws of strength class 70 or 80, as well as screws with test certification may only be tightened once with the rated tightening torque. These screws must be replaced with new ones when they are slackened for the first time.

Precondition

- The robot is in a position in which the oil filler hole and oil drain hole on the gear unit of axis 2 are accessible.
- The gear unit is at operating temperature.

Arbeitssicherheit

CAUTION

High oil and surface temperatures after the machine has stopped operating

Immediately after the machine has stopped operating, it is liable to have high oil and surface temperatures. Touching them may result in burns.

- Wear personal protective equipment.

CAUTION

Oil chamber could be pressurized

Under certain conditions, the oil chambers of the gear units may be pressurized. This can result in a sudden oil leak when the oil drain plug is opened and lead to injuries and damage to property.

- Vent the oil chamber before draining the oil.
- Wear personal protective equipment.

WARNING

Danger to life and limb due to unintended robot motions

Unintended robot motions may result in death, severe injuries and damage to property.

- Secure the robot by pressing the EMERGENCY STOP device.
- Warn all persons concerned before starting to put it back into operation.

To ensure safe use of our products, we recommend regularly requesting up-to-date safety data sheets from the manufacturers of auxiliary and operating materials.

8.4.1 Draining the gear oil from A2

Procedure

1. Place a suitable receptacle under the rotating column (>>> *Fig. 8-6*).
2. Carefully unscrew the M18x1.5 magnetic screw plug for venting and close it again.
3. Remove the oil drain hose from the rotating column and undo the union nut.
4. Remove the M18x1.5 magnetic screw plug for venting and catch the oil as it drains out.
5. Measure the amount of oil drained and store or dispose of the used oil in accordance with the pertinent regulations.

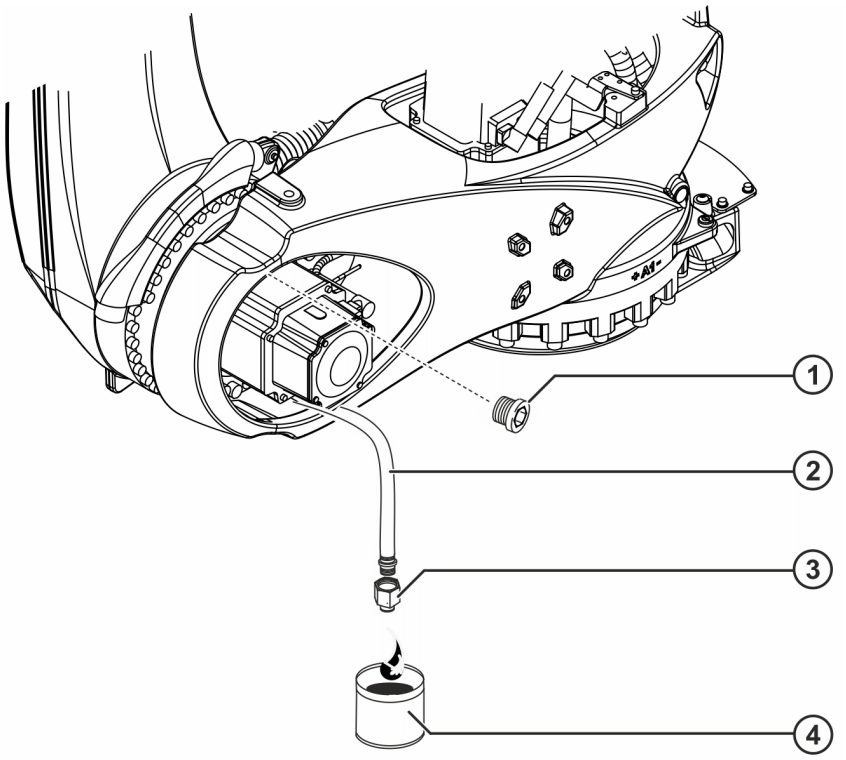

Fig. 8-6: Draining the gear oil from A2

1	Magnetic screw plug M18x1.5	3	Union nut
2	Oil drain hose	4	Collection receptacle

8.4.2 Filling gear unit A2 with gear oil

Procedure

1. Connect the oil pump to the oil drain hose (>>> *Fig. 8-7*).
2. Pour in the specified amount of oil via the oil drain hose; the chamber fills from the bottom.
3. Clean the M18x1.5 magnetic screw plug and check the sealing element; exchange the magnetic screw plug if damaged.
4. Insert and tighten the magnetic screw plug; M_A = 20 Nm.
5. Remove the oil pump.
6. Fit and tighten the union nut.
7. Check the magnetic screw plug and union nut for leaks.

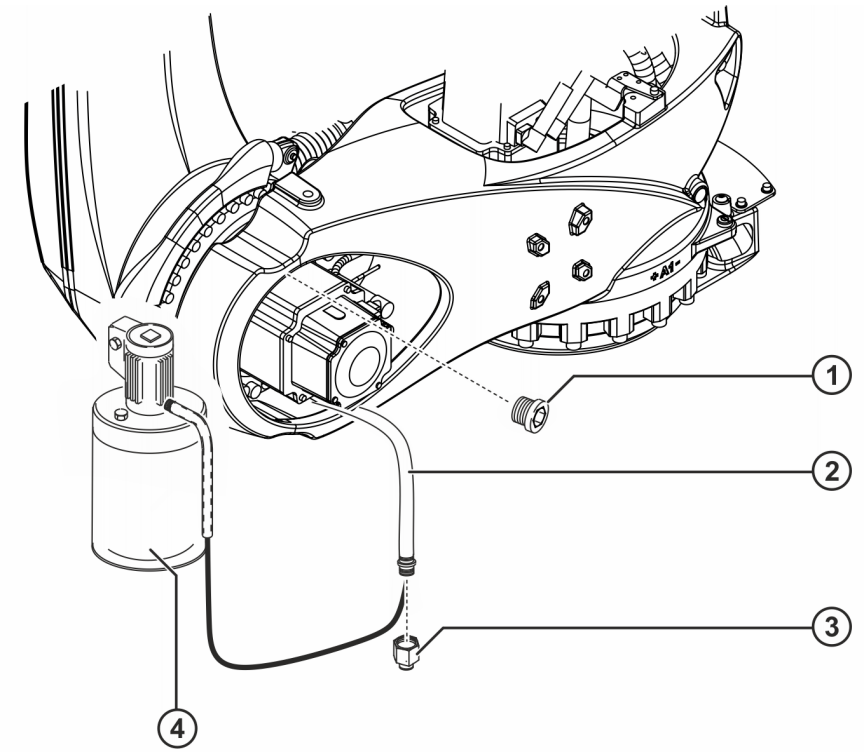

Fig. 8-7: Filling gear unit A2 with gear oil

1	Magnetic screw plug M18x1.5	3	Union nut
2	Oil drain hose	4	Oil pump

8.4.3 Concluding work

The following concluding work must be carried out:

- Remove oil residue.
- Visual inspection, check for leaks.
- Run the program in T1 mode and look out for irregularities.

8.5 Oil change in A3

Description

The following sections describe the A3 gear oil change for floor-mounted robots. For ceiling-mounted robots, the procedure is to be applied analogously, but with the drain and filler holes reversed.

Equipment

The following equipment is required:

Designation	Article number
Set of Allen keys 1.5; 2; 2.5; 3; 4; 5; 6; 8; 10 mm	-
Torque wrench min. 20 to 100 Nm	-
Socket wrench set	-
Receptacle	-

Designation	Article number
KUKA oil pump	0000-180-812

Material

The following material is required:

Designation	Article number	Quantity
Optigear Synt. ALR 150	(>>> *12.2 "Auxiliary substances and consumables used" Page 386*)	Initial filling quantity: 1.40 l

Refilling quantity

CAUTION

The quantity of oil drained depends on the draining time and the oil temperature. The refilling quantity is the quantity of oil that was drained from the gear unit at the correct operating temperature and with the correct draining time. This oil quantity must be determined. Only this quantity of oil may be used when refilling.
If less than 70 % of the specified oil quantity flows out, flush the gear unit with the determined quantity of drained oil once, then pour in the amount of oil that was drained. If less than 50% of the specified oil quantity flows out (e.g. inclined installation), the flushing operation must be repeated twice. During the flushing procedure, move the axis at jog velocity throughout the entire axis range.
The oil quantities specified in the table correspond to the oil quantities in the gear unit at first filling.

Tightening torques

The tightening torques can be found under: (>>> *12.1 "Tightening torques" Page 385*)

These are valid for screws and nuts where no other specifications are given.

Screws of strength class 10.9 and higher, stainless steel screws of strength class 70 or 80, as well as screws with test certification may only be tightened once with the rated tightening torque. These screws must be replaced with new ones when they are slackened for the first time.

Preconditions

- The robot is in a position in which the oil filler and drain holes on the axis 3 gear unit are accessible.
- The gear unit is at operating temperature.
- Axis 3 is in a horizontal position.

Arbeitssicherheit

CAUTION

High oil and surface temperatures after the machine has stopped operating

Immediately after the machine has stopped operating, it is liable to have high oil and surface temperatures. Touching them may result in burns.

- Wear personal protective equipment.

CAUTION

Oil chamber could be pressurized

Under certain conditions, the oil chambers of the gear units may be pressurized. This can result in a sudden oil leak when the oil drain plug is opened and lead to injuries and damage to property.

- Vent the oil chamber before draining the oil.
- Wear personal protective equipment.

WARNING

Danger to life and limb due to unintended robot motions

Unintended robot motions may result in death, severe injuries and damage to property.

- Secure the robot by pressing the EMERGENCY STOP device.
- Warn all persons concerned before starting to put it back into operation.

To ensure safe use of our products, we recommend regularly requesting up-to-date safety data sheets from the manufacturers of auxiliary and operating materials.

8.5.1 Draining the gear oil from A3

Procedure

1. Place a receptacle under the lower M16x1.5 magnetic screw plug (>>> *Fig. 8-8*).
2. Carefully unscrew the upper M16x1.5 magnetic screw plug for venting and close it again.
3. Remove the lower M16x1.5 magnetic screw plug.

   It is easier to drain the oil if an M16x1.5 oil drain hose is screwed into the tapped hole of the magnetic screw plug.
4. Remove the upper M16x1.5 magnetic screw plug for venting and catch the oil as it drains out.
5. Measure the amount of oil drained and store or dispose of the used oil in accordance with the pertinent regulations.

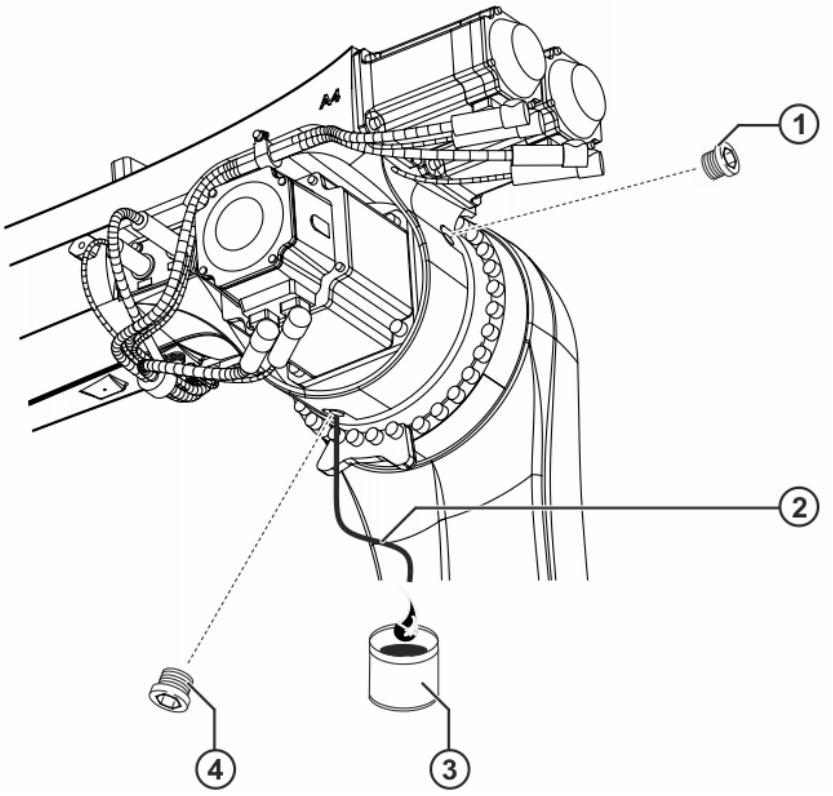

Fig. 8-8: Draining the gear oil from A3

1	Upper M16x1.5 magnetic screw plug
2	Oil drain hose
3	Collection receptacle
4	Lower M16x1.5 magnetic screw plug

8.5.2 Filling gear unit A3 with gear oil

Procedure

1. Connect the oil pump to the oil drain hose (>>> *Fig. 8-9*).
2. Pour in the specified amount of oil via the oil drain hose; the chamber fills from the bottom.
3. Clean both M16x1.5 magnetic screw plugs and check the sealing elements; exchange magnetic screw plugs if damaged.
4. Insert and tighten the upper M16x1.5 magnetic screw plug; M_A = 20 Nm.
5. Remove oil drain hose and oil pump.
6. Insert and tighten the lower M16x1.5 magnetic screw plug; M_A = 20 Nm.
7. Check both magnetic screw plugs for leaks.

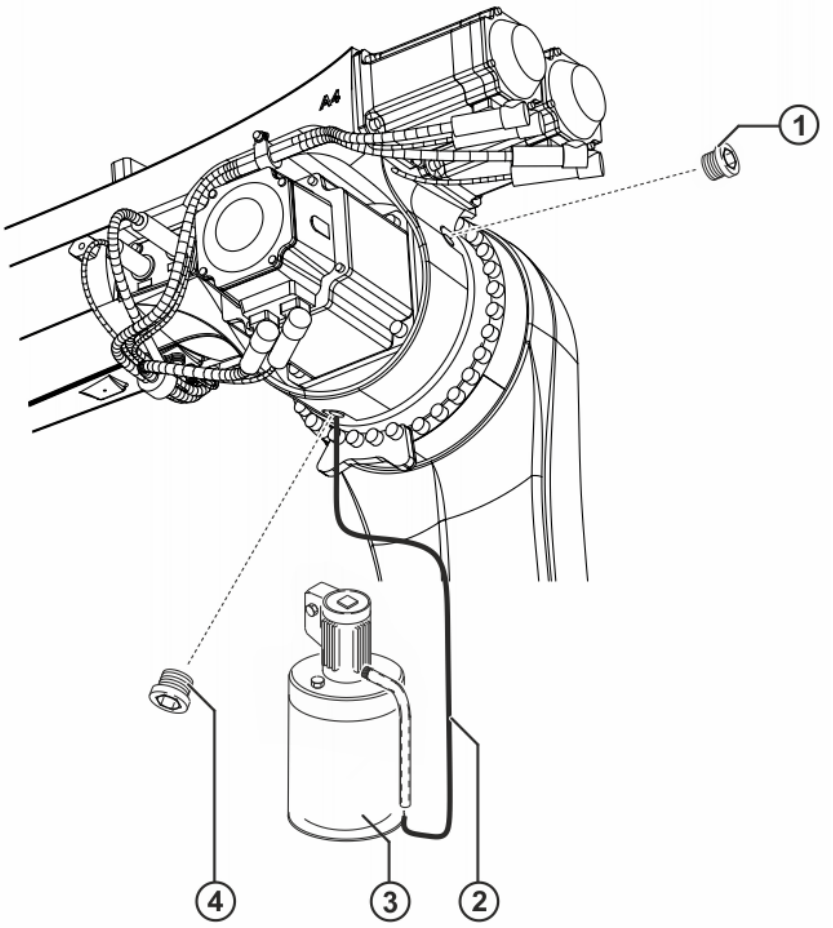

Fig. 8-9: Filling gear unit A3 with gear oil

1	Upper M16x1.5 magnetic screw plug
2	Oil drain hose
3	Oil pump
4	Lower M16x1.5 magnetic screw plug

8.5.3 Concluding work

The following concluding work must be carried out:

- Remove oil residue.
- Visual inspection, check for leaks.
- Run the program in T1 mode and look out for irregularities.

8.6 Oil change in A4

Description

The following sections describe the A4 gear oil change for floor-mounted robots. For ceiling-mounted robots, the procedure is to be applied analogously, but with the drain and filler holes reversed.

Equipment

The following equipment is required:

Designation	Article number
Set of Allen keys 1.5; 2; 2.5; 3; 4; 5; 6; 8; 10 mm	-
Torque wrench min. 20 to 100 Nm	-
Socket wrench set	-
Receptacle	-
Funnel	-

Material

The following material is required:

Designation	Article number	Quantity
Optigear Synt. ALR 150	(>>> *12.2 "Auxiliary substances and consumables used" Page 386*)	Initial filling quantity: 2.10 l

Refilling quantity

CAUTION

The quantity of oil drained depends on the draining time and the oil temperature. The refilling quantity is the quantity of oil that was drained from the gear unit at the correct operating temperature and with the correct draining time. This oil quantity must be determined. Only this quantity of oil may be used when refilling.
If less than 70 % of the specified oil quantity flows out, flush the gear unit with the determined quantity of drained oil once, then pour in the amount of oil that was drained. If less than 50% of the specified oil quantity flows out (e.g. inclined installation), the flushing operation must be repeated twice. During the flushing procedure, move the axis at jog velocity throughout the entire axis range.
The oil quantities specified in the table correspond to the oil quantities in the gear unit at first filling.

Tightening torques

The tightening torques can be found under: (>>> *12.1 "Tightening torques" Page 385*)

These are valid for screws and nuts where no other specifications are given.

Screws of strength class 10.9 and higher, stainless steel screws of strength class 70 or 80, as well as screws with test certification may only be tightened once with the rated tightening torque. These screws must be replaced with new ones when they are slackened for the first time.

Precondition

- The gear unit is at operating temperature.
- A3 is in a horizontal position.
- Oil drain plugs on A4 are freely accessible. If necessary, remove in-line wrist cover A4.

Arbeitssicherheit

CAUTION

High oil and surface temperatures after the machine has stopped operating

Immediately after the machine has stopped operating, it is liable to have high oil and surface temperatures. Touching them may result in burns.

- Wear personal protective equipment.

CAUTION

Oil chamber could be pressurized

Under certain conditions, the oil chambers of the gear units may be pressurized. This can result in a sudden oil leak when the oil drain plug is opened and lead to injuries and damage to property.

- Vent the oil chamber before draining the oil.
- Wear personal protective equipment.

WARNING

Danger to life and limb due to unintended robot motions

Unintended robot motions may result in death, severe injuries and damage to property.

- Secure the robot by pressing the EMERGENCY STOP device.
- Warn all persons concerned before starting to put it back into operation.

To ensure safe use of our products, we recommend regularly requesting up-to-date safety data sheets from the manufacturers of auxiliary and operating materials.

8.6.1 Draining the gear oil from A4

Procedure

1. Place a receptacle under the lower M18x1.5 magnetic screw plug (>>> *Fig. 8-10*).
2. Carefully unscrew the upper M18x1.5 magnetic screw plug for venting and close it again.
3. Remove the lower M18x1.5 magnetic screw plug.

   It is easier to drain the oil if an M18x1.5 oil drain hose is screwed into the tapped hole of the magnetic screw plug.
4. Remove the upper M18x1.5 magnetic screw plug for venting and catch the oil as it drains out.
5. Measure the amount of oil drained and store or dispose of the used oil in accordance with the pertinent regulations.

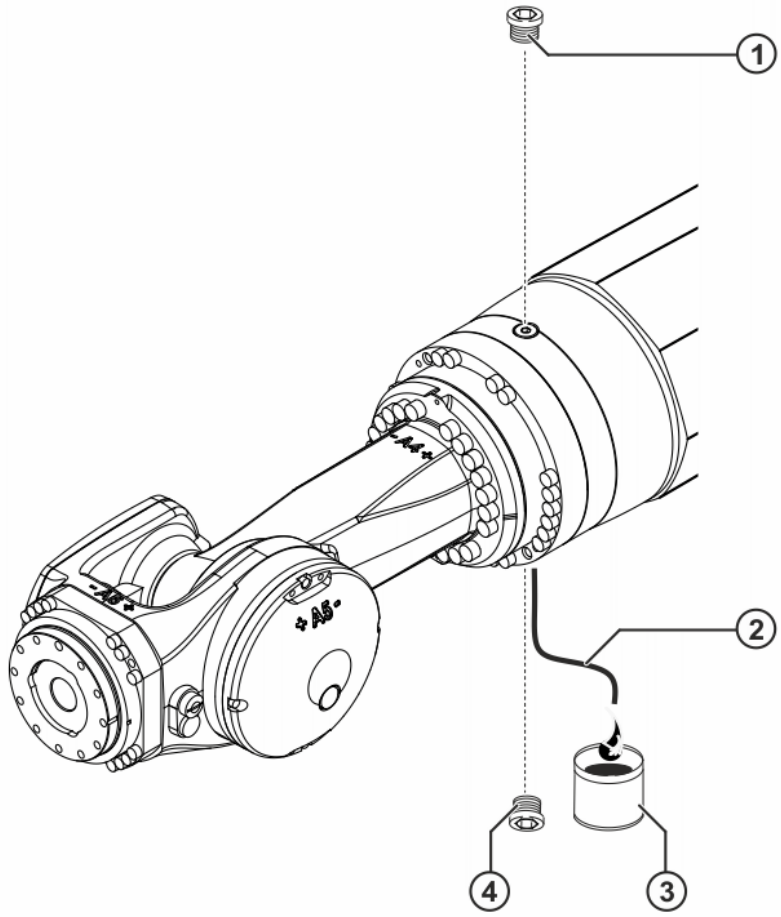

Fig. 8-10: Draining the gear oil from A4

1	Upper M18x1.5 magnetic screw plug
2	Oil drain hose
3	Collection receptacle
4	Lower M18x1.5 magnetic screw plug

8.6.2 Filling gear unit A4 with gear oil

Procedure

1. Clean both M18x1.5 magnetic screw plugs and check the sealing element; exchange magnetic screw plugs if damaged (>>> *Fig. 8-11*).
2. Insert and tighten the lower M18x1.5 magnetic screw plug; M_A = 40 Nm.
3. Pour in, from above, the same amount of oil as was drained.
4. Insert and tighten the upper M18x1.5 magnetic screw plug; M_A = 40 Nm.
5. Check both magnetic screw plugs for leaks.

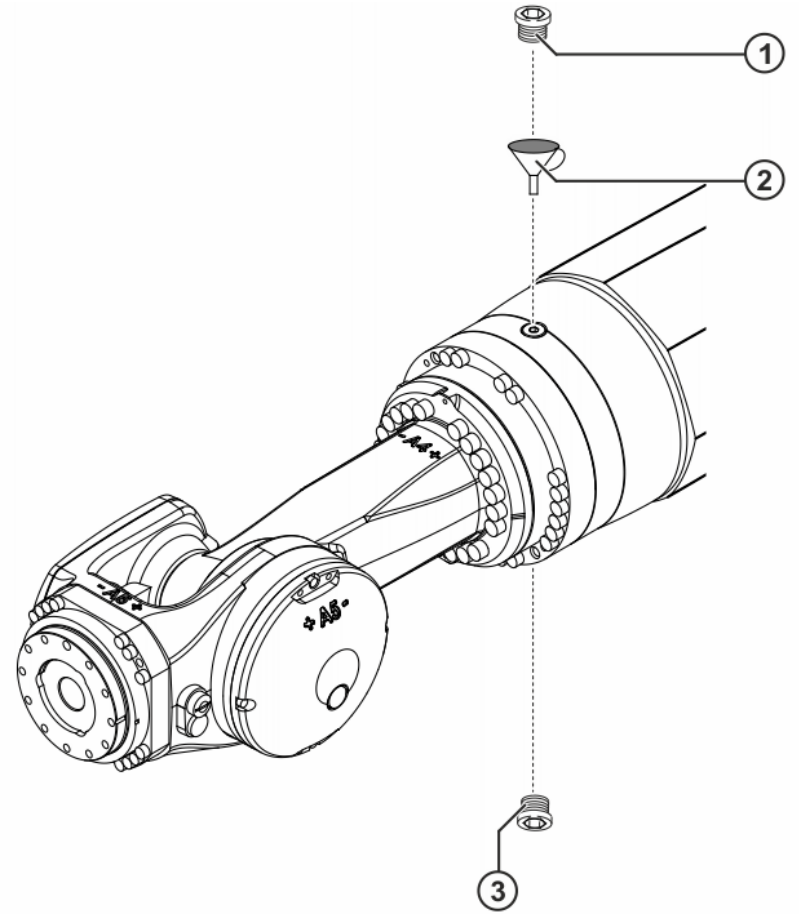

Fig. 8-11: Filling A4 with gear oil

1 Upper M18x1.5 magnetic screw plug
2 Funnel
3 Lower M18x1.5 magnetic screw plug

8.6.3 Concluding work

The following concluding work must be carried out:

- Remove oil residue.
- Visual inspection, check for leaks.
- Run the program in T1 mode and look out for irregularities.

8.7 Oil change in A5/A6

Description

The following sections describe the A5/A6 gear oil change for floor-mounted robots. For ceiling-mounted robots, the procedure is to be applied analogously, but with the drain and filler holes reversed.

Equipment

The following equipment is required:

Designation	Article number
Set of Allen keys 1.5; 2; 2.5; 3; 4; 5; 6; 8; 10 mm	-
Torque wrench min. 5 Nm to 50 Nm	-
Socket wrench set	-
Receptacle	-
Funnel	-

Material

The following material is required:

Designation	Article number	Quantity
Optigear Synt. ALR 150	(>>> *12.2 "Auxiliary substances and consumables used" Page 386*)	Initial filling quantity: 1.40 l for in-line wrist type ZH210 and ZH210 F and ZH120 HV400 1.90 l for in-line wrist type ZH300 and ZH300 F

Refilling quantity

CAUTION

The quantity of oil drained depends on the draining time and the oil temperature. The refilling quantity is the quantity of oil that was drained from the gear unit at the correct operating temperature and with the correct draining time. This oil quantity must be determined. Only this quantity of oil may be used when refilling.
If less than 70 % of the specified oil quantity flows out, flush the gear unit with the determined quantity of drained oil once, then pour in the amount of oil that was drained. If less than 50% of the specified oil quantity flows out (e.g. inclined installation), the flushing operation must be repeated twice. During the flushing procedure, move the axis at jog velocity throughout the entire axis range.
The oil quantities specified in the table correspond to the oil quantities in the gear unit at first filling.

Tightening torques

The tightening torques can be found under: (>>> *12.1 "Tightening torques" Page 385*)

These are valid for screws and nuts where no other specifications are given.

Screws of strength class 10.9 and higher, stainless steel screws of strength class 70 or 80, as well as screws with test certification may only

be tightened once with the rated tightening torque. These screws must be replaced with new ones when they are slackened for the first time.

Precondition

- The gear unit is at operating temperature.
- Axis 3 is in a horizontal position.

Arbeitssicherheit

CAUTION

High oil and surface temperatures after the machine has stopped operating

Immediately after the machine has stopped operating, it is liable to have high oil and surface temperatures. Touching them may result in burns.

- Wear personal protective equipment.

CAUTION

Oil chamber could be pressurized

Under certain conditions, the oil chambers of the gear units may be pressurized. This can result in a sudden oil leak when the oil drain plug is opened and lead to injuries and damage to property.

- Vent the oil chamber before draining the oil.
- Wear personal protective equipment.

WARNING

Danger to life and limb due to unintended robot motions

Unintended robot motions may result in death, severe injuries and damage to property.

- Secure the robot by pressing the EMERGENCY STOP device.
- Warn all persons concerned before starting to put it back into operation.

To ensure safe use of our products, we recommend regularly requesting up-to-date safety data sheets from the manufacturers of auxiliary and operating materials.

8.7.1 Draining the gear oil on A5/A6

Procedure

1. Put the robot into operation, move axis 4 to the +90° position, and then secure the robot by activating the EMERGENCY STOP device (>>> *8.7.1 "Draining the gear oil on A5/A6" Page 244*).
2. Place suitable receptacles under the magnetic screw plugs for A5 and A6 and unscrew the magnetic screw plugs.

   It is easier to drain the oil if an M18x1.5 oil drain hose is screwed into the tapped hole of the magnetic screw plug.

   NOTICE

   Overpressure

   Gear oil may escape.
   Keep the upper magnetic screw plug closed while draining oil.

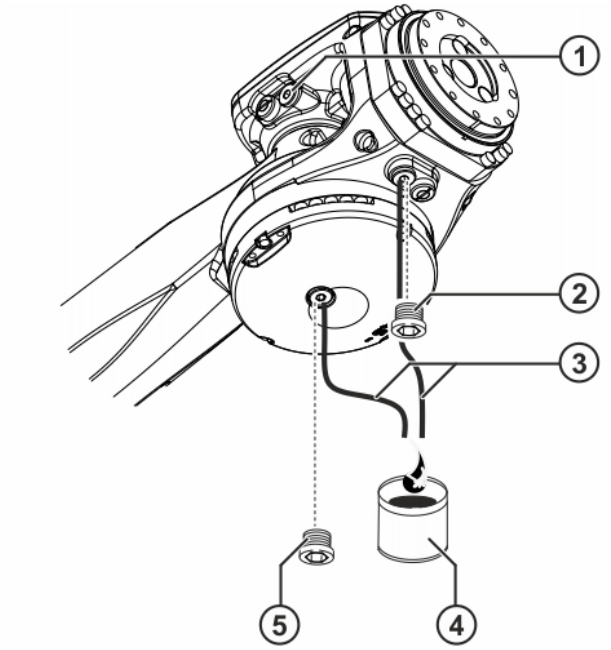

Fig. 8-12: Draining the gear oil from A5 and A6

1	Upper M18x1.5 magnetic screw plug	4	Collection receptacle
2	M18x1.5 magnetic screw plug for A6	5	M18x1.5 magnetic screw plug for A5
3	Oil drain hose (2x)		

3. Put the robot into operation, move axis 4 to the 0° position, and then secure the robot by activating the EMERGENCY STOP device (>>> *Fig. 8-13*).
4. Place suitable receptacles under the lower magnetic screw plugs and unscrew the magnetic screw plugs.

   It is easier to drain the oil if an M18x1.5 oil drain hose is screwed into the tapped hole of the magnetic screw plug.
5. Measure the amount of oil drained and store or dispose of the used oil in accordance with the pertinent regulations.

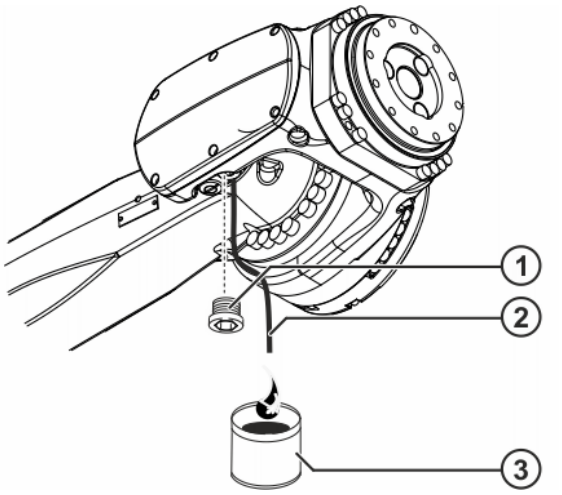

Fig. 8-13: Draining the gear oil from A5 and A6

1 Lower M18x1.5 magnetic screw plug
2 Oil drain hose
3 Collection receptacle

8.7.2 Filling gear unit A5/A6 with gear oil

Procedure

1. Put the robot into operation, move axis 4 to the -90° position, and then secure the robot by activating the EMERGENCY STOP device (>>> *Fig. 8-14*).
2. Clean the 3 M18x1.5 magnetic screw plugs and check the sealing element; exchange the magnetic screw plugs if damaged.
3. Insert and tighten the lower M18x1.5 magnetic screw plug; M_A = 20 Nm.
4. Fill approx. 1/3 of the quantity of oil drained into the opening on A5 from above.
5. Fill the remainder of the quantity of oil drained into the opening on A6 from above.
6. Insert and tighten the M18x1.5 magnetic screw plugs for A5 and A6; M_A = 20 Nm.
7. Check the 3 magnetic screw plugs for leaks.

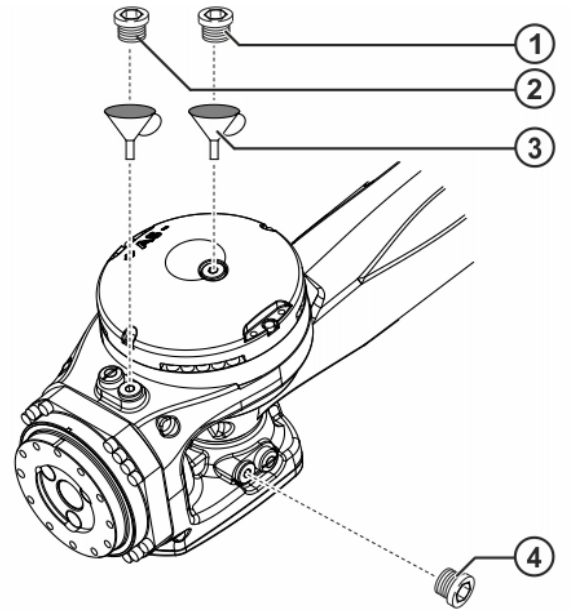

Fig. 8-14: Filling gear units A5 and A6 with gear oil

1	M18x1.5 magnetic screw plug for A5	3	Funnel
2	M18x1.5 magnetic screw plug for A6	4	Lower M18x1.5 magnetic screw plug

8.7.3 Concluding work

The following concluding work must be carried out:

- Remove oil residue.
- Visual inspection, check for leaks.
- Run the program in T1 mode and look out for irregularities.

8.8 Checking the counterbalancing system

Description

The following describes those tasks which must be carried out on the counterbalancing system at the intervals specified in the maintenance table.

The gas pressure must always be checked on all diaphragm accumulators!

Equipment

The following equipment is required:

Designation	Article number
Rag	-

Precondition

- The robot is operational and can be moved at jog velocity.
- There is no hazard posed by system components or other robots.
- The robot is secured if work is being performed directly on the robot.

Work safety

WARNING

Danger to life and limb due to unintended robot motions

When carrying out the following work, the robot must be moved several times between the individual work steps. Unintentional movements of the robot can cause death, serious injury or material damage.

- While work is being carried out on the robot, it must always be secured by actuating the EMERGENCY STOP device.
- If work is carried out on an operational robot that is switched on, the robot must only be moved at reduced velocity. It must be possible to stop the robot at any time by actuating an EMERGENCY STOP device. Operation must be limited to what is absolutely necessary.
- Warn all persons concerned before switching on and moving the robot.

8.8.1 Checking the counterbalancing system

Procedure

1. Manually move A2 to -90° (link arm vertical). The robot arm may be in any position.
2. Wait 1 minute.
3. Secure the robot by pressing the EMERGENCY STOP device.
4. Check the following pressure on the pressure gauge:
   - Floor-mounted robots: 168 bar ±15 bar at 20 °C (293 K)
     - KR 120 R3500-2 P
     - KR 120 R3900-2 K
     - KR 180 R3500-2 K
     - KR 180 R3500-2 K-F
     - KR 210 R3300-2 K
     - KR 210 R3300-2 K-F
     - KR 270 R3100-2 K
     - KR 270 R3100-2 K-F
   - Ceiling-mounted robot: 273 bar ±15 bar at 20 °C (293 K)
     - KR 120 R3500-2 P-C

   If the permissible value is not correct and/or there are deviations in the application, the value must be measured with a special pressure gauge and KUKA Service must be consulted.
5. Check the attachments for dirt and clean them if necessary.
6. Check the attachments for damage and ensure that they do not leak. In the case of leaks, identify the position of the leaks and remove oil residues. If necessary, have the counterbalancing system exchanged by trained specialist personnel.
7. Check the collar for dirt and damage, clean it or have it exchanged by trained specialist personnel if necessary.

8.8.2 Concluding work

The following concluding work must be carried out:

- Remove oil residue.

- Visual inspection, check for leaks.
- Run the program in T1 mode and look out for irregularities.

8.9 Exchanging the counterbalancing system

Description

The following sections describe the procedures for exchanging and checking the counterbalancing system of shelf-mounted machines.

The gas pressure must always be checked on all diaphragm accumulators!

Equipment

The following equipment is required:

Designation	Article number
Torque wrench min. 20 Nm to 100 Nm	-
Socket set, ½ inch	-
Rope slings with sufficient load-bearing capacity	-
2 cranes with sufficient load-bearing capacity	-
Pin extractor	0000-131-687
Locking pin	0000-194-717
Pin locator	0000-190-253
Rag	-
Wooden pallet	-
Collection receptacle	-

Material

The following material is required:

Designation	Article number	Quantity
CBS shelf assy type GA22 For the following machines: • KR 120 R3500-2 P • KR 120 R3900-2 K • KR 180 R3500-2 K • KR 210 R3300-2 K • KR 270 R3100-2 K	0000-355-315	1
CBS shelf assy, type GA22-FO For the following machines: • KR 180 R3500-2 K-F • KR 210 R3300-2 K-F • KR 270 R3100-2 K-F	0000-369-933	1

Procurement of spare parts

Defective components must only be replaced with original spare parts from KUKA Deutschland GmbH. Non-compliance nullifies warranty and liability claims.

A “Repair Card” is supplied with the exchange parts. This must be completed and returned to KUKA Deutschland GmbH together with the defective component in the following cases.

- Within the warranty period
- If, after consultation with KUKA Deutschland GmbH, an examination of the defective component by KUKA is required.

Tightening torques

The tightening torques can be found under: (>>> *12.1 "Tightening torques" Page 385*)

These are valid for screws and nuts where no other specifications are given.

Screws of strength class 10.9 and higher, stainless steel screws of strength class 70 or 80, as well as screws with test certification may only be tightened once with the rated tightening torque. These screws must be replaced with new ones when they are slackened for the first time.

Preconditions

- The robot is in the mechanical zero position.
- It must be possible to move the robot about axis 2.
- The robot must be correctly bolted to the floor.
- Any items of equipment that are likely to impede the removal and installation work have been removed.
- The new counterbalancing system is correctly filled.

Work safety

WARNING

Danger to life and limb due to unintended robot motions

When carrying out the following work, the robot must be moved several times between the individual work steps. Unintentional movements of the robot can cause death, serious injury or material damage.

- While work is being carried out on the robot, it must always be secured by actuating the EMERGENCY STOP device.
- If work is carried out on an operational robot that is switched on, the robot must only be moved at reduced velocity. It must be possible to stop the robot at any time by actuating an EMERGENCY STOP device. Operation must be limited to what is absolutely necessary.
- Warn all persons concerned before switching on and moving the robot.

WARNING

When removing or installing the counterbalancing system, care must be taken to avoid injury to arms, hands and fingers by crushing. Wear gloves and secure the counterbalancing system so that it cannot fall down or move unexpectedly.
The counterbalancing system weighs approx. 40 kg.
The counterbalancing system is pressurized. Particular caution must therefore be exercised and special knowledge put to effect when any work is performed on this system. Any improper handling constitutes a danger to life and limb.

8.9.1 Securing the link arm

Procedure

1. Secure the link arm with a rope sling and attach the rope sling to the crane hook.
2. Raise the rope sling until it is taut.

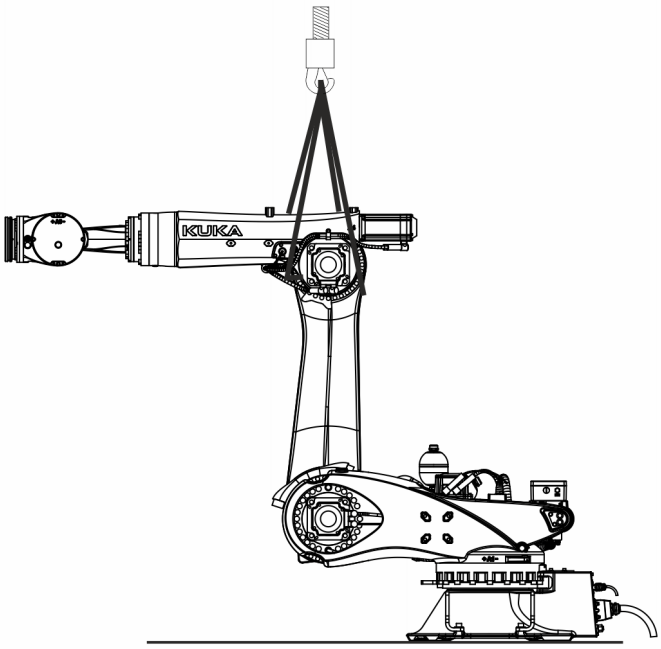

Fig. 8-15: Securing the link arm

8.9.2 Removing the counterbalancing system

Procedure

1. Slacken and remove the screw plug (>>> *Fig. 8-16*).
2. Move the link arm in the plus direction until the locking pin can be inserted.
3. Secure the robot by pressing the EMERGENCY STOP device.
4. Insert the locking pin. It must be possible to turn it by hand.
5. Put the robot into operation and carefully move the link arm in the minus direction until the piston of the counterbalancing system rests lightly on the locking pin. The locking pin then cannot be turned any further.

CAUTION

Material damage due to blocked counterbalancing system

Do not move the counterbalancing system further in the minus direction. The counterbalancing system, link arm or rotating column may otherwise be damaged.

– Secure the robot by pressing the EMERGENCY STOP device.

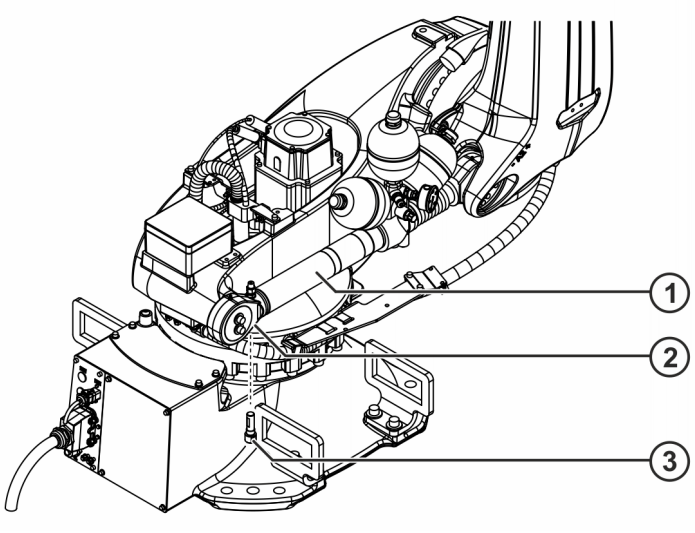

Fig. 8-16: Counterbalancing system, locking pin

1 Counterbalancing system
2 Screw plug
3 Locking pin

6. Secure the counterbalancing system with a rope sling and a crane and move the crane until the weight is supported by the rope sling (>>> *Fig. 8-17*).
7. Remove 4 M8x20-10.9 Allen screws and conical spring washers, and take off the retaining plate.

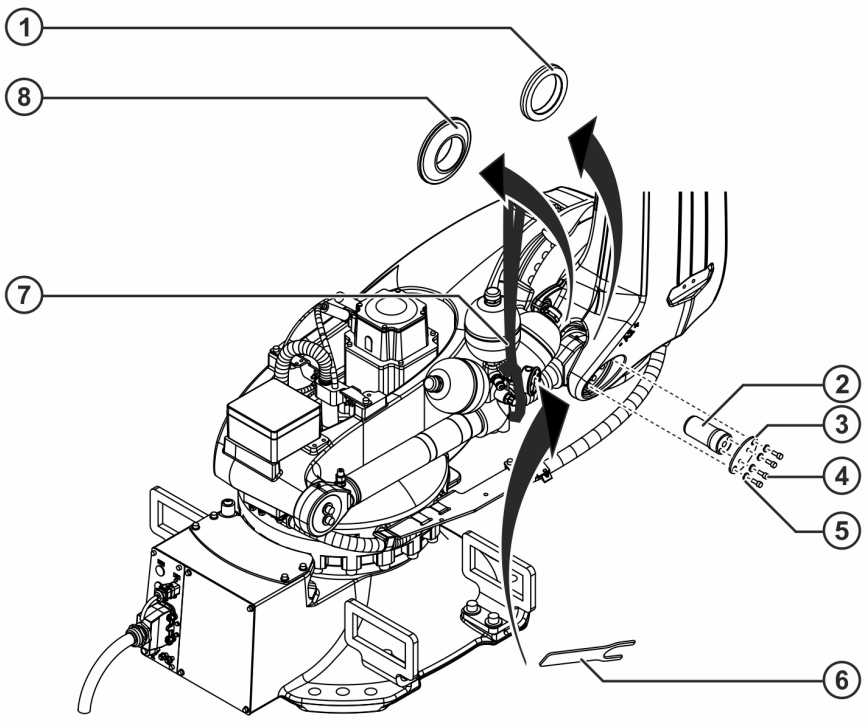

Fig. 8-17: Counterbalancing system, pin

1	Spacer ring	5	Conical spring washer
2	Pin	6	Pin locator
3	Retaining plate	7	Rope sling
4	M8x20-10.9 Allen screw (4x)	8	Thrust ring

8. Insert the pin locator on the right-hand side between the articulated head and the link arm.
9. Pull the pin out of the link arm using an M16 pin extractor.
   The pin is out of the precision fit area when it has been pulled out approx. 25 mm.
10. Put the robot into operation and move the link arm carefully in the plus direction until the articulated head is free. When moving the link arm, move the crane and rope sling at the same time, so that the weight of the arm is supported by the crane.
11. Secure the robot by pressing the EMERGENCY STOP device.
12. Swivel the counterbalancing system up and out of the link arm, moving the crane and rope sling at the same time.
13. Take off the pin locator, thrust ring and spacer ring that are now loose.



CAUTION

When forcing the counterbalancing system off the rotating column, an unfavorable position of the center of gravity may cause the counterbalancing system to move unexpectedly. To avoid injury and damage, the tension and position of the rope must be adjusted as necessary.

14. Remove 2 M12x30 Allen screws and lock washers, and take the cover off the rotating column (>>> *Fig. 8-18*).
15. Force the counterbalancing system off the pin in the rotating column.
    While forcing off the counterbalancing system, check the rope tension and if necessary correct it to prevent the components from being tilted.

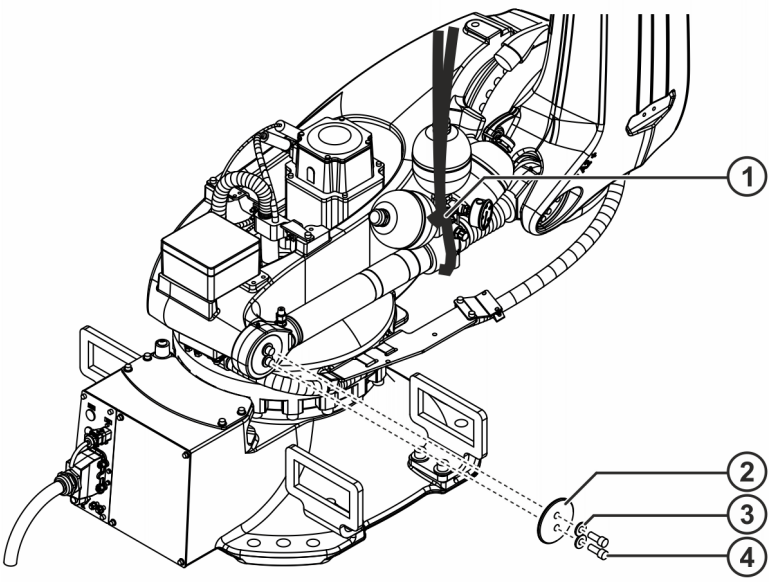

Fig. 8-18: Counterbalancing system, rotating column

1 Rope sling	3 Conical spring washer
2 Cover	4 M12x30-10.9 Allen screw (2x)

16. Continue raising the counterbalancing system with the crane and set it down on a suitable support.
17. If the counterbalancing system is not to be reinstalled, it must be protected against corrosion before being put into storage.

If a new counterbalancing system is not being installed immediately, the robot can be moved into a safe position and the rope securing the link arm can be removed. The robot may only be moved again in order to install the new counterbalancing system.

8.9.3 Installing the counterbalancing system

Procedure

1. Remove corrosion protection from the counterbalancing system and check that no part of it is missing.
2. If necessary, put the robot into operation and move the link arm into approximately the -85° position.
3. Secure the robot by pressing the EMERGENCY STOP device.
4. Lift the counterbalancing system with a rope sling and bring it to the site of installation (>>> *Fig. 8-19*).
5. Mount the counterbalancing system sideways on the pin in the rotating column, and align.
6. If necessary, adjust the rope tension.
7. Mount cover.
8. Apply Drei Bond 1342 adhesive to 2 M12x30-10.9 Allen screws and insert them into the cover with conical spring washers.
9. Tighten 2 M12x30-10.9 Allen screws with a torque wrench. Increase the tightening torque to the specified value in several stages.

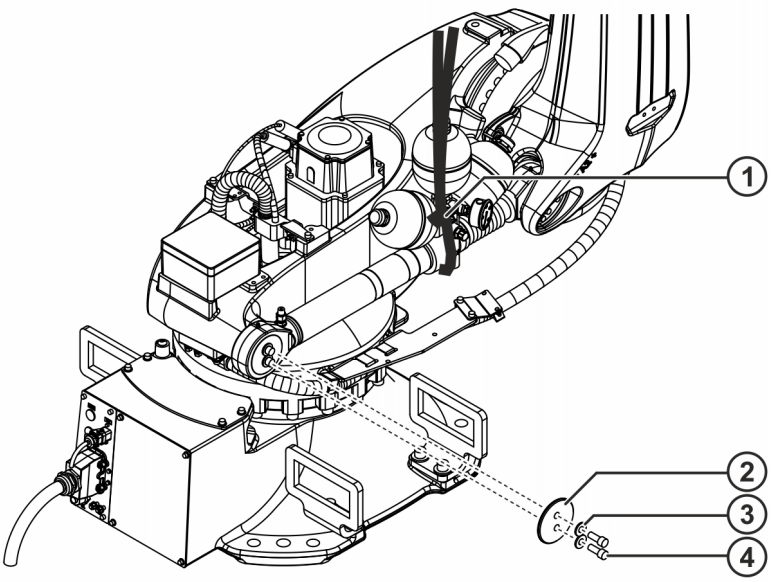

Fig. 8-19: Counterbalancing system, rotating column

1 Rope sling	3 Conical spring washer
2 Cover	4 M12x30-10.9 Allen screw (2x)

10. Put the robot into operation.
11. Move the link arm until the counterbalancing system can be inserted into the link arm. At the same time, move the element securing the link arm accordingly (>>> *Fig. 8-20*).
12. Lower the counterbalancing system.
13. Apply a thin but continuous coat of Microlube GL 261 to the thrust ring and spacer ring.

    Insert the articulated head with the thrust ring and spacer ring into the link arm, and align.

    Observe installation position of thrust ring and spacer ring!
14. Move the link arm and counterbalancing system until the holes are aligned.
15. Insert the pin with the aid of the device.
16. Mount the retaining plate and insert 4 M8x20-10.9 Allen screws and conical spring washers.
17. Tighten 4 M8x20-10.9 Allen screws with a torque wrench. Increase the tightening torque to the specified value in several stages.
18. Remove the rope sling on the counterbalancing system.

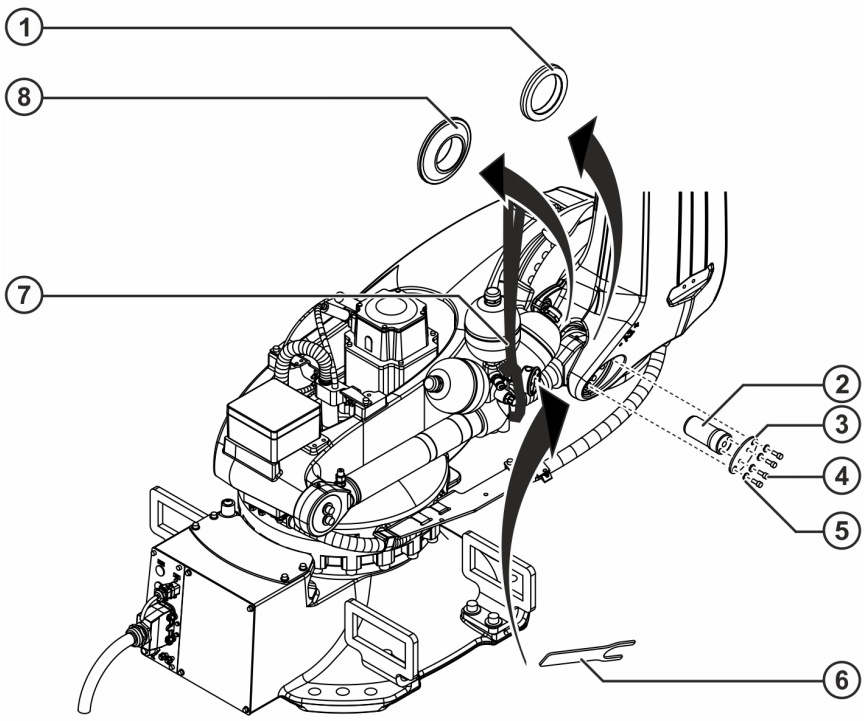

Fig. 8-20: Counterbalancing system, pin

1	Spacer ring	5	Conical spring washer
2	Pin	6	Pin locator
3	Retaining plate	7	Rope sling
4	M8x20-10.9 Allen screw (4x)	8	Thrust ring

19. Put the robot into operation.
20. Move the link arm in the plus direction until the locking pin is released. (>>> *Fig. 8-21*).

CAUTION

Material damage due to blocked counterbalancing system

Do not move the counterbalancing system further in the minus direction. The counterbalancing system, link arm or rotating column may otherwise be damaged.

– Secure the robot by pressing the EMERGENCY STOP device.

21. Secure the robot by pressing the EMERGENCY STOP device.
22. Remove locking pin.
23. Insert and tighten the M18x1.5 screw plug; M_A = 20 Nm.

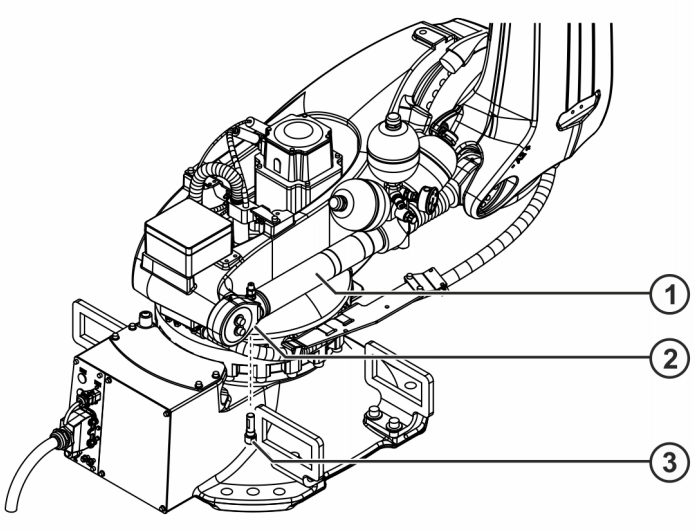

Fig. 8-21: Counterbalancing system, locking pin

1 Counterbalancing system
2 Screw plug
3 Locking pin

24. Check the pressure on the counterbalancing system (>>> *8.8 "Checking the counterbalancing system" Page 247*).

8.9.4 Removing the equipment securing the link arm

Procedure

1. Slacken the rope sling and detach from the crane.
2. Remove the rope sling from the robot.

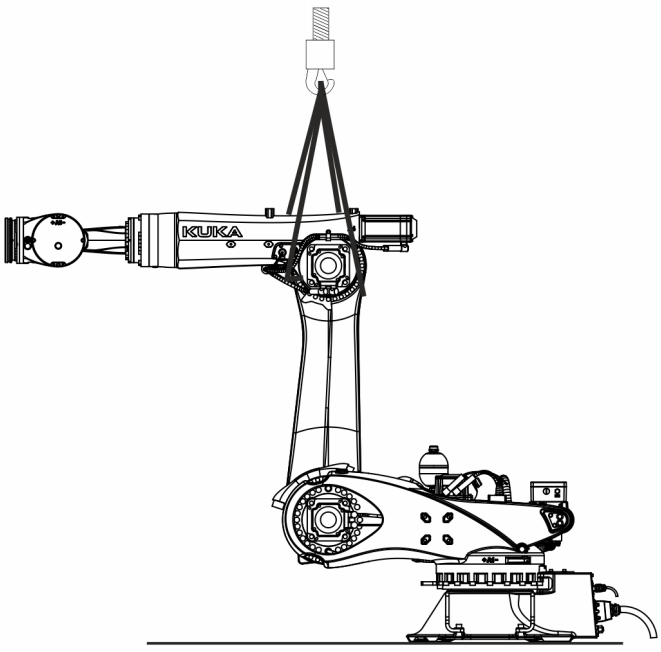

Fig. 8-22: Securing the link arm

8.9.5 Checking the counterbalancing system

Procedure

1. Manually move A2 to -90° (link arm vertical). The robot arm may be in any position.
2. Wait 1 minute.
3. Secure the robot by pressing the EMERGENCY STOP device.
4. Check the following pressure on the pressure gauge:
   - Floor-mounted robots: 168 bar ±15 bar at 20 °C (293 K)
     - KR 120 R3500-2 P
     - KR 120 R3900-2 K
     - KR 180 R3500-2 K
     - KR 180 R3500-2 K-F
     - KR 210 R3300-2 K
     - KR 210 R3300-2 K-F
     - KR 270 R3100-2 K
     - KR 270 R3100-2 K-F
   - Ceiling-mounted robot: 273 bar ±15 bar at 20 °C (293 K)
     - KR 120 R3500-2 P-C

   If the permissible value is not correct and/or there are deviations in the application, the value must be measured with a special pressure gauge and KUKA Service must be consulted.
5. Check the attachments for dirt and clean them if necessary.
6. Check the attachments for damage and ensure that they do not leak. In the case of leaks, identify the position of the leaks and remove oil residues. If necessary, have the counterbalancing system exchanged by trained specialist personnel.
7. Check the collar for dirt and damage, clean it or have it exchanged by trained specialist personnel if necessary.

8.9.6 Concluding work

The following concluding work must be carried out:

- Move link arm and carry out a function test.
- Check the pressure on the counterbalancing system pressure gauge in the neutral position (piston rod is retracted to the maximum extent) against the pressure table.
- Move the link arm against the positive and negative software limit stops, observing the counterbalancing system pressure gauge.

  The counterbalancing system pressure must rise constantly from the neutral position in both the plus and minus directions.
- Visual inspection, check for leaks.

8.10 Exchanging the counterbalancing system on a ceiling-mounted robot

Description

The following sections describe the procedures for exchanging and checking the counterbalancing system of ceiling-mounted machines. To remove and install the counterbalancing system, the ceiling-mounted robot must

be removed from the ceiling and securely fastened to the floor (to the foundation).

The gas pressure must always be checked on all diaphragm accumulators!

Equipment

The following equipment is required:

Designation	Article number
Torque wrench min. 20 Nm to 100 Nm	-
Socket set, ½ inch	-
Rope slings with sufficient load-bearing capacity	-
2 cranes with sufficient load-bearing capacity	-
Pin extractor	0000-131-687
Pin locator	0000-190-253
Rag	-
Wooden pallet	-
Collection receptacle	-

Material

The following material is required:

Designation	Article number	Quantity
Ceiling-CBS shelf-mount. assy. type GA23 For the following machines: • KR 120 R3500-2 P-C	0000-370-531	1

Procurement of spare parts

Defective components must only be replaced with original spare parts from KUKA Deutschland GmbH. Non-compliance nullifies warranty and liability claims.

A “Repair Card” is supplied with the exchange parts. This must be completed and returned to KUKA Deutschland GmbH together with the defective component in the following cases.

- Within the warranty period
- If, after consultation with KUKA Deutschland GmbH, an examination of the defective component by KUKA is required.

Tightening torques

The tightening torques can be found under: (>>> *12.1 "Tightening torques" Page 385*)

These are valid for screws and nuts where no other specifications are given.

Screws of strength class 10.9 and higher, stainless steel screws of strength class 70 or 80, as well as screws with test certification may only be tightened once with the rated tightening torque. These screws must be replaced with new ones when they are slackened for the first time.

Preconditions

- The robot is in the mechanical zero position.
- It must be possible to move the robot about axis 2.
- The robot must be correctly bolted to the floor.
- Any items of equipment that are likely to impede the removal and installation work have been removed.
- The new counterbalancing system is correctly filled.

Work safety

WARNING

Danger to life and limb due to unintended robot motions

When carrying out the following work, the robot must be moved several times between the individual work steps. Unintentional movements of the robot can cause death, serious injury or material damage.

- While work is being carried out on the robot, it must always be secured by actuating the EMERGENCY STOP device.
- If work is carried out on an operational robot that is switched on, the robot must only be moved at reduced velocity. It must be possible to stop the robot at any time by actuating an EMERGENCY STOP device. Operation must be limited to what is absolutely necessary.
- Warn all persons concerned before switching on and moving the robot.

WARNING

When removing or installing the counterbalancing system, care must be taken to avoid injury to arms, hands and fingers by crushing. Wear gloves and secure the counterbalancing system so that it cannot fall down or move unexpectedly.
The counterbalancing system weighs approx. 40 kg.
The counterbalancing system is pressurized. Particular caution must therefore be exercised and special knowledge put to effect when any work is performed on this system. Any improper handling constitutes a danger to life and limb.

8.10.1 Securing the link arm

Procedure

1. Secure the link arm with a rope sling and attach the rope sling to the crane hook.
2. Raise the rope sling until it is taut.

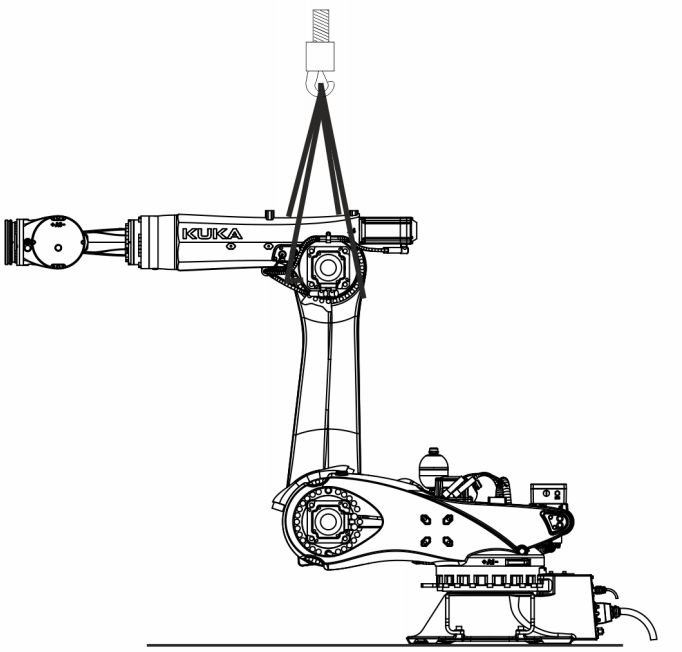

Fig. 8-23: Securing the link arm

8.10.2 Removing the counterbalancing system on a ceiling-mounted robot

Procedure

1. Remove the screw cap and connect the hose to the vent valve.
2. Place a suitable receptacle under the hose and collect the hydraulic oil.

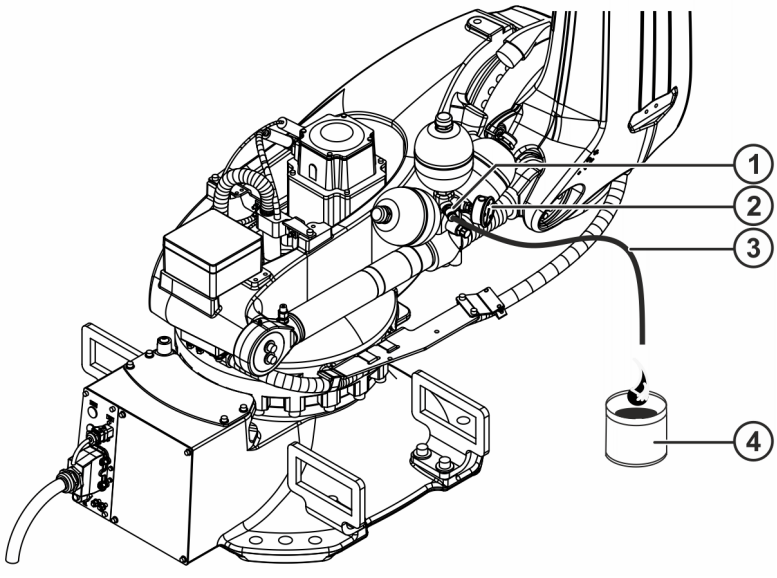

Fig. 8-24: Counterbalancing system, draining hydraulic oil

1 Screw cap and vent valve
2 Pressure gauge
3 Hose
4 Collection receptacle

3. Drain the oil until the pressure gauge reads zero.

The oil side of the diaphragm accumulator is now depressurized.

Leave hose connected to the vent valve and leave the vent valve open.

4. Secure the counterbalancing system with a rope sling and a crane and move the crane until the weight is supported by the rope sling (>>> *Fig. 8-25*).
5. Remove 4 M8x20-10.9 Allen screws and conical spring washers, and take off the retaining plate.

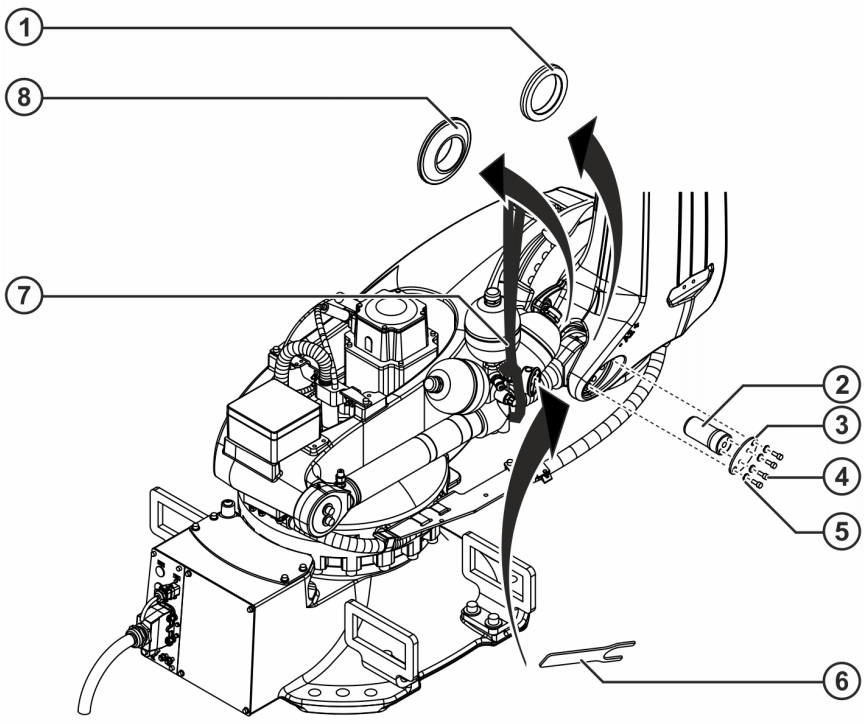

Fig. 8-25: Counterbalancing system, pin

1	Spacer ring	5	Conical spring washer
2	Pin	6	Pin locator
3	Retaining plate	7	Rope sling
4	M8x20-10.9 Allen screw (4x)	8	Thrust ring

6. Insert the pin locator on the right-hand side between the articulated head and the link arm.
7. Pull the pin out of the link arm using an M16 pin extractor.

   The pin is out of the precision fit area when it has been pulled out approx. 25 mm.
8. Put the robot into operation and move the link arm carefully in the plus direction until the articulated head is free. When moving the link arm, move the crane and rope sling at the same time, so that the weight of the arm is supported by the crane.
9. Secure the robot by pressing the EMERGENCY STOP device.
10. Swivel the counterbalancing system up and out of the link arm, moving the crane and rope sling at the same time.
11. Take off the pin locator, thrust ring and spacer ring that are now loose.

CAUTION

When forcing the counterbalancing system off the rotating column, an unfavorable position of the center of gravity may cause the counterbalancing system to move unexpectedly. To avoid injury and damage, the tension and position of the rope must be adjusted as necessary.

12. Remove 2 M12x30 Allen screws and lock washers, and take the cover off the rotating column (>>> *Fig. 8-26*).
13. Force the counterbalancing system off the pin in the rotating column.
    While forcing off the counterbalancing system, check the rope tension and if necessary correct it to prevent the components from being tilted.

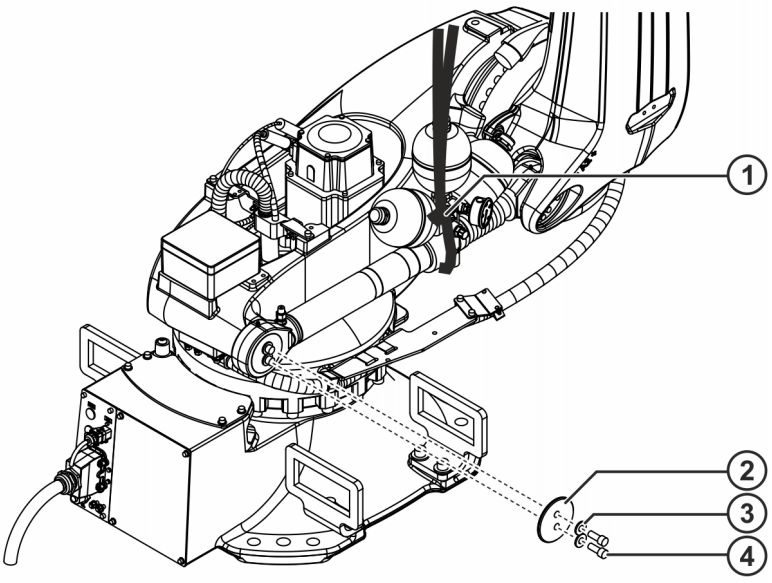

Fig. 8-26: Counterbalancing system, rotating column

1	Rope sling	3	Conical spring washer
2	Cover	4	M12x30-10.9 Allen screw (2x)

14. Continue raising the counterbalancing system with the crane and set it down on a suitable support.
15. If the counterbalancing system is not to be reinstalled, it must be protected against corrosion before being put into storage.

If a new counterbalancing system is not being installed immediately, the robot can be moved into a safe position and the rope securing the link arm can be removed. The robot may only be moved again in order to install the new counterbalancing system.

8.10.3 Installing the counterbalancing system on a ceiling-mounted robot

Procedure

1. Remove corrosion protection from the counterbalancing system and check that no part of it is missing.
2. If necessary, put the robot into operation and move the link arm into approximately the -85° position.
3. Secure the robot by pressing the EMERGENCY STOP device.

4. Lift the counterbalancing system with a rope sling and bring it to the site of installation (>>> *Fig. 8-27*).
5. Mount the counterbalancing system sideways on the pin in the rotating column, and align.
6. If necessary, adjust the rope tension.
7. Mount cover.
8. Apply Drei Bond 1342 adhesive to 2 M12x30-10.9 Allen screws and insert them into the cover with conical spring washers.
9. Tighten 2 M12x30-10.9 Allen screws with a torque wrench. Increase the tightening torque to the specified value in several stages.

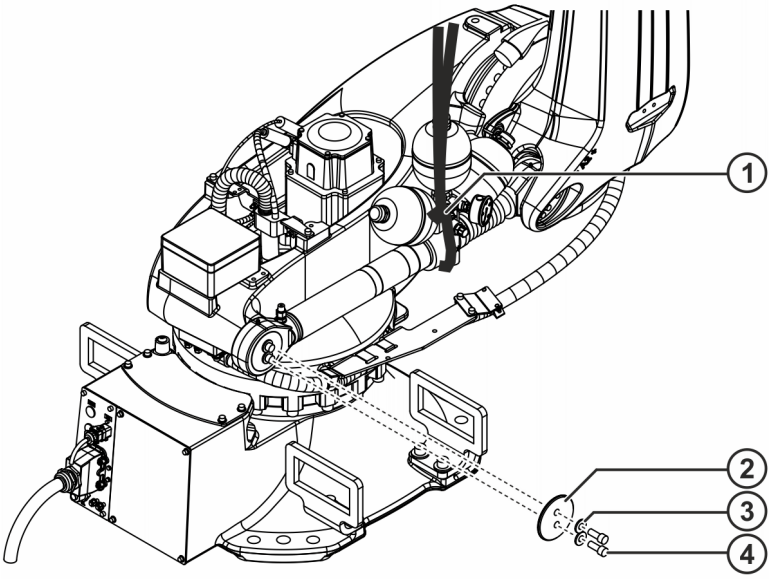

Fig. 8-27: Counterbalancing system, rotating column

1 Rope sling	3 Conical spring washer
2 Cover	4 M12x30-10.9 Allen screw (2x)

10. Put the robot into operation.
11. Move the link arm until the counterbalancing system can be inserted into the link arm. At the same time, move the element securing the link arm accordingly (>>> *Fig. 8-28*).
12. Lower the counterbalancing system.
13. Apply a thin but continuous coat of Microlube GL 261 to the thrust ring and spacer ring.

    Insert the articulated head with the thrust ring and spacer ring into the link arm, and align.

    Observe installation position of thrust ring and spacer ring!
14. Move the link arm and counterbalancing system until the holes are aligned.
15. Insert the pin with the aid of the device.
16. Mount the retaining plate and insert 4 M8x20-10.9 Allen screws and conical spring washers.
17. Tighten 4 M8x20-10.9 Allen screws with a torque wrench. Increase the tightening torque to the specified value in several stages.
18. Remove the rope sling on the counterbalancing system.

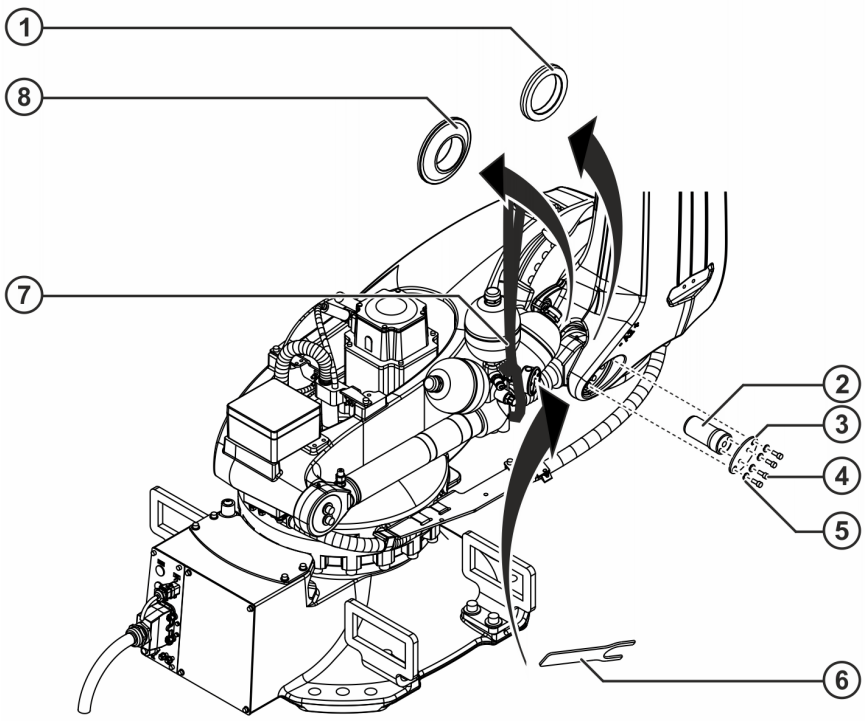

Fig. 8-28: Counterbalancing system, pin

1	Spacer ring	5	Conical spring washer
2	Pin	6	Pin locator
3	Retaining plate	7	Rope sling
4	M8x20-10.9 Allen screw (4x)	8	Thrust ring

19. Mount the bellows on the cylinder and the articulated head and fasten with worm drive clips.
20. Check the pressure on the counterbalancing system (>>> *8.8 "Checking the counterbalancing system" Page 247*).

8.10.4 Removing the equipment securing the link arm

Procedure

1. Slacken the rope sling and detach from the crane.
2. Remove the rope sling from the robot.

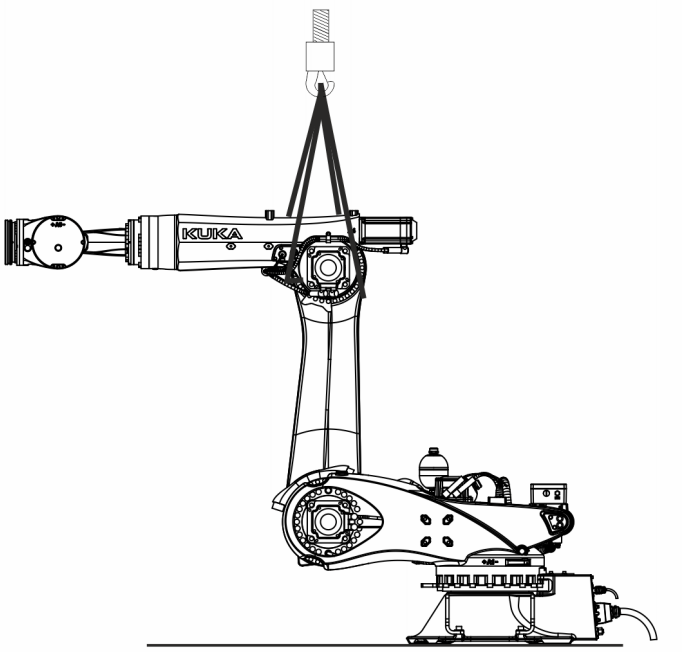

Fig. 8-29: Securing the link arm

8.10.5 Checking the counterbalancing system

Procedure

1. Manually move A2 to -90° (link arm vertical). The robot arm may be in any position.
2. Wait 1 minute.
3. Secure the robot by pressing the EMERGENCY STOP device.
4. Check the following pressure on the pressure gauge:
   - Floor-mounted robots: 168 bar ±15 bar at 20 °C (293 K)
     - KR 120 R3500-2 P
     - KR 120 R3900-2 K
     - KR 180 R3500-2 K
     - KR 180 R3500-2 K-F
     - KR 210 R3300-2 K
     - KR 210 R3300-2 K-F
     - KR 270 R3100-2 K
     - KR 270 R3100-2 K-F
   - Ceiling-mounted robot: 273 bar ±15 bar at 20 °C (293 K)
     - KR 120 R3500-2 P-C

   If the permissible value is not correct and/or there are deviations in the application, the value must be measured with a special pressure gauge and KUKA Service must be consulted.
5. Check the attachments for dirt and clean them if necessary.
6. Check the attachments for damage and ensure that they do not leak. In the case of leaks, identify the position of the leaks and remove oil residues. If necessary, have the counterbalancing system exchanged by trained specialist personnel.
7. Check the collar for dirt and damage, clean it or have it exchanged by trained specialist personnel if necessary.

8.10.6 Concluding work

The following concluding work must be carried out:

- Move link arm and carry out a function test.
- Check the pressure on the counterbalancing system pressure gauge in the neutral position (piston rod is retracted to the maximum extent) against the pressure table.
- Move the link arm against the positive and negative software limit stops, observing the counterbalancing system pressure gauge.

  The counterbalancing system pressure must rise constantly from the neutral position in both the plus and minus directions.
- Visual inspection, check for leaks.

8.11 Cleaning the robot

Description

The robot must be cleaned in compliance with the instructions given here in order to prevent damage. These instructions only refer to the robot.

Equipment

The following equipment is required:

Designation	Article number
Permissible cleaning tools (e.g. cloths, brushes)	-

Material

The following material is required:

Designation	Article number	Quantity
Corrosion protection without friction-reducing substances	-	-
Cleaning agent solvent-free, water-soluble, non-flammable, non-aggressive, no steam, no refrigerants	-	-

Precondition

- The robot controller is switched off.
- The robot is freely accessible.

Work safety

NOTICE

The following must be taken into consideration when carrying out cleaning work (material damage may otherwise result):

- Cleaning must be in accordance with the corresponding cleaning instructions.
- Do not use high-pressure cleaners.
- Compressed air must not be used to clean bearing and sealing points.
- It must be ensured that no cleaning agent enters electrical or mechanical system components.

8.11.1 Cleaning

Procedure

1. Shut down the robot.
2. If necessary, shut adjacent system components down and lock them.
3. Remove enclosures if this is necessary in order to carry out the cleaning work.
4. Clean the robot.
5. Fully remove all cleaning agents from the robot.
6. Clean any areas of corrosion and reapply corrosion protection.
7. Install any safety equipment that has been removed.
8. Put back in place any enclosures that have been removed.

8.11.2 Concluding work

The following concluding work must be carried out:

- Remove cleaning agents and equipment from the workspace of the robot.
- Dispose of cleaning agents in accordance with the pertinent regulations.
- Replace any damaged or illegible plates and covers.
- Install any safety equipment that has been removed and check that it is functioning correctly. Only a functional system with all safety functions may be put back into operation.

9 Repair

Only maintenance and repair work described in this document may be performed.

Work that exceeds this scope may only be carried out by personnel specially trained by KUKA.

Information about KUKA College and its training program can be found at college.kuka.com or can be obtained directly from our subsidiaries.

In the case of support and repair services provided by KUKA, KUKA Service must be informed in advance about potential contamination or hazards.

Non-compliance nullifies warranty and liability claims.

9.1 Exchanging motor A1

Description

The following instructions describe the exchange of the motor. This description applies to floor-mounted robots. If the robot is installed in an inclined or suspended position, the procedure is to be applied analogously.

During removal of the motor, the robot can independently move about this axis. Mechanical auxiliary equipment (e.g. support, crane) or a stable end position (e.g. buffer) can be used to secure against motions.

Equipment

The following equipment is required:

Designation	Article number
Set of Allen keys 1.5; 2; 2.5; 3; 4; 5; 6; 8; 10 mm	-
Torque wrench min. 20 Nm to 100 Nm	-
Socket wrench set	-
Brush	-
SEMD/MEMD mastering kit	0000-228-936

Material

The following material is required:

Designation	Article number	Quantity
SPP motor 5.8kW L0 ME For the following machines: • KR 120 R3500-2 P • KR 120 R3500-2 P-C	0000-334-484	1
SPP motor 5.5kW L0 ME For the following machines: • KR 120 R3900-2 K • KR 180 R3500-2 K • KR 210 R3300-2 K • KR 270 R3100-2 K	0000-334-485	1

Designation	Article number	Quantity
SPP motor 5.5kW L0 ME For the following machines: • KR 180 R3500-2 K-F • KR 210 R3300-2 K-F • KR 270 R3100-2 K-F	0000-362-288	1

Procurement of spare parts

Defective components must only be replaced with original spare parts from KUKA Deutschland GmbH. Non-compliance nullifies warranty and liability claims.

A “Repair Card” is supplied with the exchange parts. This must be completed and returned to KUKA Deutschland GmbH together with the defective component in the following cases.

- Within the warranty period
- If, after consultation with KUKA Deutschland GmbH, an examination of the defective component by KUKA is required.

Tightening torques

The tightening torques can be found under: (>>> *12.1 "Tightening torques" Page 385*)

These are valid for screws and nuts where no other specifications are given.

Screws of strength class 10.9 and higher, stainless steel screws of strength class 70 or 80, as well as screws with test certification may only be tightened once with the rated tightening torque. These screws must be replaced with new ones when they are slackened for the first time.

Precondition

- The robot is secured by means of an EMERGENCY STOP device. It must be ensured that the robot cannot be switched on by unauthorized persons.

Work safety

CAUTION

Risk of burns on hot surfaces

The surfaces of the motors are often hot immediately after the robot has been decommissioned. Touching them may result in burns.

- Wear protective gloves.

WARNING

Danger to life and limb due to live parts

When work is performed on this system, live parts can lead to unintentional motions of the robot, positioner or other components. Failure to observe this may result in physical injuries and damage to property.

- If work is carried out on an operable system, the main switch on the control cabinet must be turned to the OFF position and secured with a padlock to prevent unauthorized persons from switching it on again.
- Inform the persons involved by means of a sign (e.g. affix a warning sign).
- Warn all persons concerned before putting the system back into operation.

WARNING

Danger to life and limb when working on live parts

Before commencing work on live parts of the robot system and/or on electrical systems, measures must be taken to ensure that the 5 safety rules are followed. It is essential that the 5 safety steps are followed in the correct order. Death, severe injuries or damage to property may result.

1. De-energize
2. Secure against unintentional restart
3. Ensure that the system is de-energized
4. Ground and short-circuit the system
5. Cover or erect barriers around neighboring energized parts

Once the work is completed, tools and equipment must be removed and the measures rescinded in reverse sequence.

DANGER

Danger to life and limb due to defective or unsuitable load suspension devices

If defective or non-approved load suspension devices are used, the load may fall off or start to swing. Failure to observe this can lead to death, injury or property damage.

- Before using load suspension devices, check for defects (e.g. damage, corrosion, deformation, wear, cracks) and exchange components if necessary.
- Use only inspected and approved load suspension devices.
- Use only load suspension devices with a sufficient load-bearing capacity.

WARNING

Risk of crushing during removal and installation of motor

When removing or installing the motor, there is a risk of injury by crushing. This could result in hand injuries.

- Wear protective gloves.

NOTICE

Wear and premature failure due to damage to toothing

Damage to the toothing of the motor and gear unit can lead to increased wear and premature failure of the components.

- During cleaning, ensure that the toothing is not damaged.
- Before installation, check the toothing of the motor and gear unit for damage.

To ensure safe use of our products, we recommend regularly requesting up-to-date safety data sheets from the manufacturers of auxiliary and operating materials.

9.1.1 Removing the motor on axis 1

Procedure

1. Release and unplug connectors XM1 and XP1 at the sockets.
2. Unscrew 4 M12x25-8.8-A2K Allen screws.
3. Release and lift out motor A1, being careful not to tilt it.
4. Cover the input shaft and protect it against fouling.

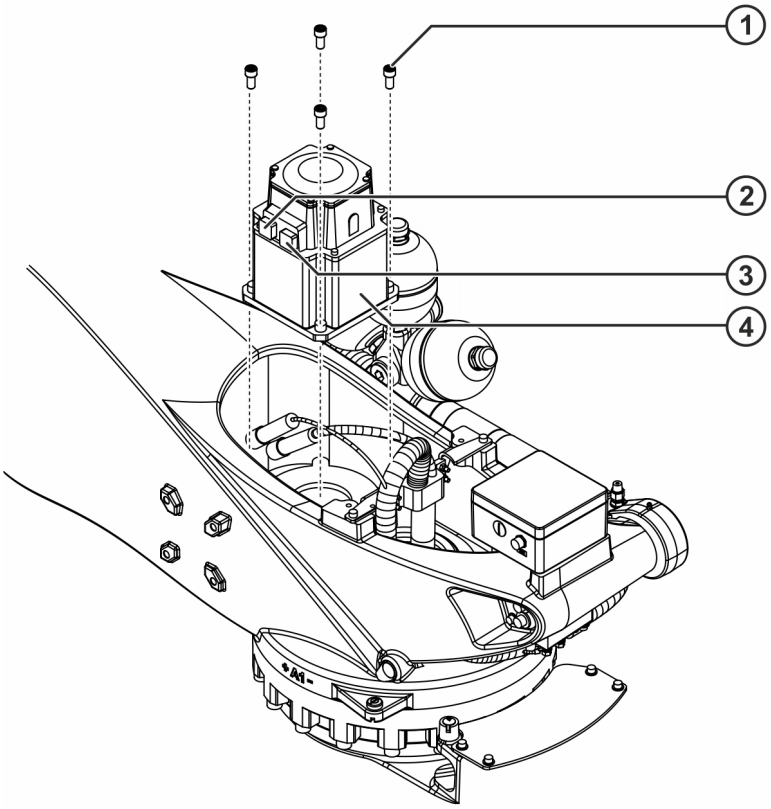

Fig. 9-1: Motor A1

1 M12x25-8.8-A2K Allen screw
2 Motor A1
3 Connector XP1
4 Connector XM1

5. If the motor is not to be reinstalled, it must be disposed of properly or protected against corrosion before being put into storage.

9.1.2 Preparing a new motor for installation

Procedure

1. Clean the involute toothing of motor and gear unit before installation and apply a thin but continuous coat of Microlube GL 261 grease.
2. Clean the mounting surface for the motor.
3. Check the condition of the O-ring on the motor shaft. In the case of damage and/or wear, the O-ring must be exchanged.

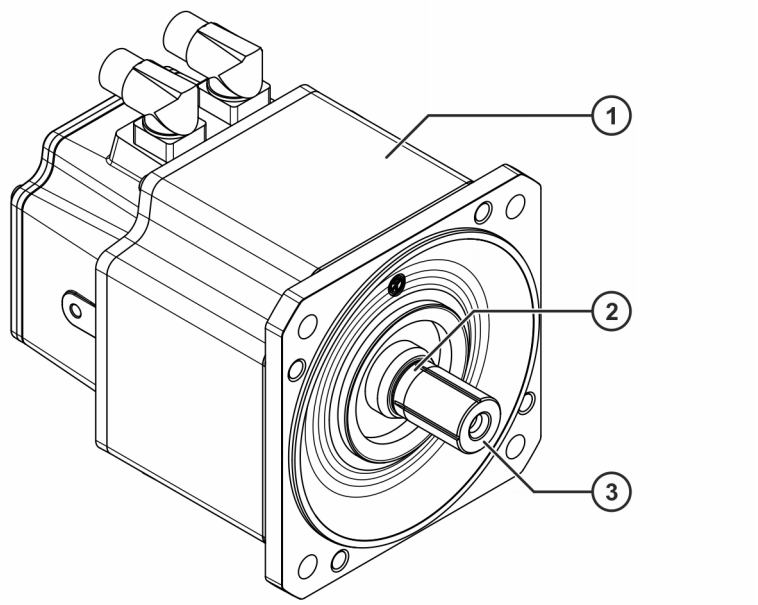

Fig. 9-2: Preparing a new motor A1-A3 for installation

1 Motor
2 O-ring
3 Involute toothing

9.1.3 Installing the motor on axis 1

Procedure

1. If a new motor is to be installed, remove any corrosion protection it may have prior to installation.
2. Clean the involute toothing of motor A1 and gear unit A1 before installation and apply a thin but continuous coat of Microlube GL 261 grease.
3. Clean the mounting surface of motor A1 on the motor mount.
4. Check the condition of the O-ring on the motor shaft; exchange if necessary. The additional spacer ring must be present.
5. Position sockets XM1 and XP1 as shown.
6. Insert motor A1, taking care not to tilt it.



Insertion of motor can be facilitated by turning it gently about its rotational axis.

7. Insert 4 M12x25-8.8-A2K Allen screws.

8. Tighten 4 M12x25-8.8-A2K Allen screws with a torque wrench in diagonally opposite sequence. Increase the tightening torque to the specified value in several stages.
9. Plug connectors XM1 and XP1 into the sockets. The pins and coding elements of the connectors must be taken into consideration. When inserting the connectors, turn them until they clearly lock into the coding elements (twist-proof).

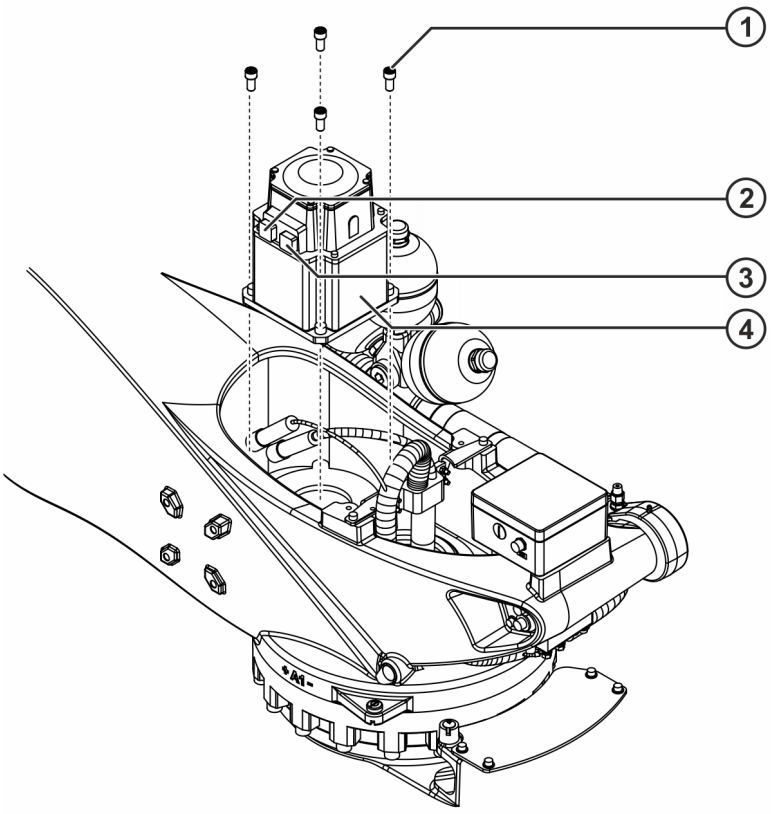

Fig. 9-3: Motor A1

1 M12x25-8.8-A2K Allen screw
2 Motor A1
3 Connector XP1
4 Connector XM1

9.1.4 Concluding work

The following concluding work must be carried out:

- Move A1 of the robot and look out for irregularities.
- Carry out mastering of A1.

Detailed information about mastering can be found in the system software documentation.

- Test the program in Manual Reduced Velocity (T1) mode.

9.2 Exchanging motor A2

Description

The following instructions describe the exchange of the motor. This description applies to floor-mounted robots. If the robot is installed in an inclined or suspended position, the procedure is to be applied analogously.

During removal of the motor, the robot can independently move about this axis. Mechanical auxiliary equipment (e.g. support, crane) or a stable end position (e.g. buffer) can be used to secure against motions.

Equipment

The following equipment is required:

Designation	Article number
Set of Allen keys 1.5; 2; 2.5; 3; 4; 5; 6; 8; 10 mm	-
Torque wrench min. 20 Nm to 100 Nm	-
Socket wrench set	-
Crane with sufficient load-bearing capacity	-
Rope sling with sufficient load-bearing capacity	-
Brush	-
SEMD/MEMD mastering kit	0000-228-936

Material

The following material is required:

Designation	Article number	Quantity
SPP motor 5.8kW L0 ME For the following machines: • KR 120 R3500-2 P • KR 120 R3500-2 P-C • KR 210 R3300-2 K • KR 270 R3100-2 K	0000-334-484	1
SPP motor 5.5kW L0 ME For the following machines: • KR 120 R3900-2 K • KR 180 R3500-2 K	0000-334-485	1
SPP motor 5.5kW L0 ME For the following machines: • KR 180 R3500-2 K-F	0000-362-288	1
SPP motor 5.8kW L0 ME For the following machines: • KR 210 R3300-2 K-F • KR 270 R3100-2 K-F	0000-362-289	1

Procurement of spare parts

Defective components must only be replaced with original spare parts from KUKA Deutschland GmbH. Non-compliance nullifies warranty and liability claims.

A “Repair Card” is supplied with the exchange parts. This must be completed and returned to KUKA Deutschland GmbH together with the defective component in the following cases.

- Within the warranty period
- If, after consultation with KUKA Deutschland GmbH, an examination of the defective component by KUKA is required.

Tightening torques

The tightening torques can be found under: (>>> *12.1 "Tightening torques" Page 385*)

These are valid for screws and nuts where no other specifications are given.

Screws of strength class 10.9 and higher, stainless steel screws of strength class 70 or 80, as well as screws with test certification may only be tightened once with the rated tightening torque. These screws must be replaced with new ones when they are slackened for the first time.

Precondition

- The robot is secured by means of an EMERGENCY STOP device. It must be ensured that the robot cannot be switched on by unauthorized persons.
- The removal site is freely accessible for work tasks involving a crane.

Work safety

CAUTION

Risk of burns on hot surfaces

The surfaces of the motors are often hot immediately after the robot has been decommissioned. Touching them may result in burns.

- Wear protective gloves.

WARNING

Danger to life and limb due to live parts

When work is performed on this system, live parts can lead to unintentional motions of the robot, positioner or other components. Failure to observe this may result in physical injuries and damage to property.

- If work is carried out on an operable system, the main switch on the control cabinet must be turned to the OFF position and secured with a padlock to prevent unauthorized persons from switching it on again.
- Inform the persons involved by means of a sign (e.g. affix a warning sign).
- Warn all persons concerned before putting the system back into operation.

WARNING

Danger to life and limb when working on live parts

Before commencing work on live parts of the robot system and/or on electrical systems, measures must be taken to ensure that the 5 safety rules are followed. It is essential that the 5 safety steps are followed in the correct order. Death, severe injuries or damage to property may result.

1. De-energize
2. Secure against unintentional restart
3. Ensure that the system is de-energized
4. Ground and short-circuit the system
5. Cover or erect barriers around neighboring energized parts

Once the work is completed, tools and equipment must be removed and the measures rescinded in reverse sequence.

DANGER

Danger to life and limb due to defective or unsuitable load suspension devices

If defective or non-approved load suspension devices are used, the load may fall off or start to swing. Failure to observe this can lead to death, injury or property damage.

- Before using load suspension devices, check for defects (e.g. damage, corrosion, deformation, wear, cracks) and exchange components if necessary.
- Use only inspected and approved load suspension devices.
- Use only load suspension devices with a sufficient load-bearing capacity.

WARNING

Risk of crushing during removal and installation of motor

When removing or installing the motor, there is a risk of injury by crushing. This could result in hand injuries.

- Wear protective gloves.

NOTICE

Wear and premature failure due to damage to toothing

Damage to the toothing of the motor and gear unit can lead to increased wear and premature failure of the components.

- During cleaning, ensure that the toothing is not damaged.
- Before installation, check the toothing of the motor and gear unit for damage.

To ensure safe use of our products, we recommend regularly requesting up-to-date safety data sheets from the manufacturers of auxiliary and operating materials.

9.2.1 Securing the link arm

Procedure

1. Secure the link arm with a rope sling and attach the rope sling to the crane hook.

2. Raise the rope sling until it is taut.

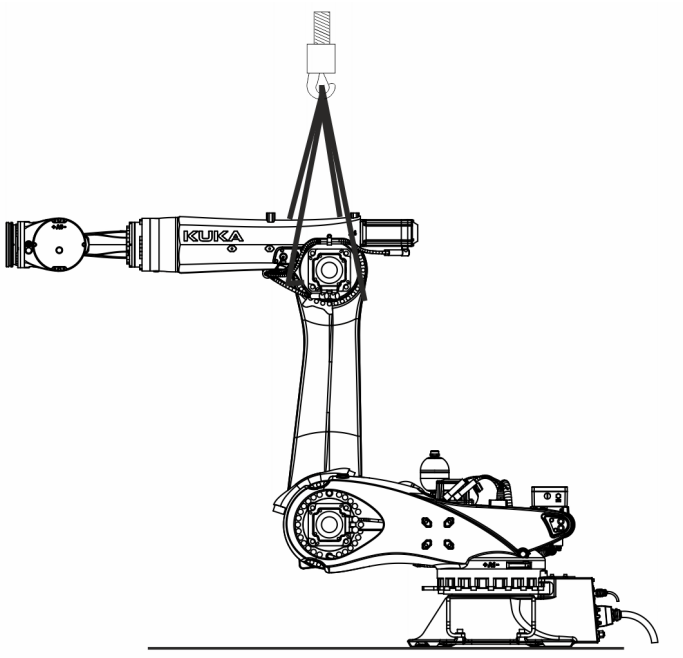

Fig. 9-4: Securing the link arm

9.2.2 Removing motor A2

Procedure

1. Release and unplug connectors XM2 and XP2 at the sockets.
2. Place the rope sling around motor A2 and raise it using the crane until the weight of motor A2 is supported by the rope sling.
3. Unscrew 4 M12x25-8.8-A2K Allen screws.
4. Release and carefully lift out motor A2, taking care not to tilt it.

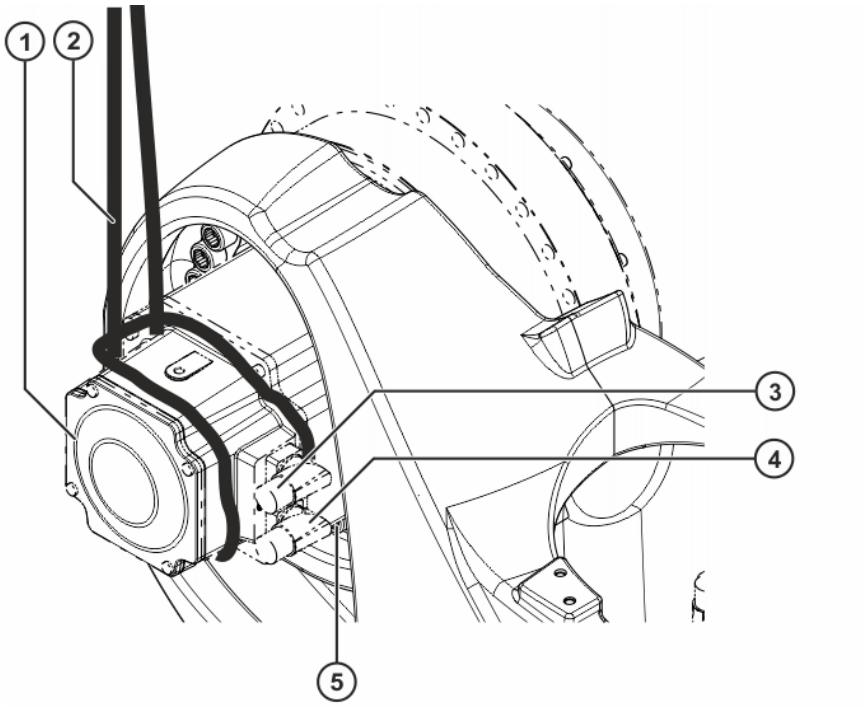

Fig. 9-5: Motor A2

1 Motor A2
2 Rope sling
3 Connector XM2
4 Connector XP2
5 M12x25-8.8-A2K Allen screw

5. Cover the aperture on motor mount A2 and protect it against fouling.
6. If the motor is not to be reinstalled, it must be disposed of properly or protected against corrosion before being put into storage.

9.2.3 Preparing a new motor for installation

Procedure

1. Clean the involute toothing of motor and gear unit before installation and apply a thin but continuous coat of Microlube GL 261 grease.
2. Clean the mounting surface for the motor.
3. Check the condition of the O-ring on the motor shaft. In the case of damage and/or wear, the O-ring must be exchanged.

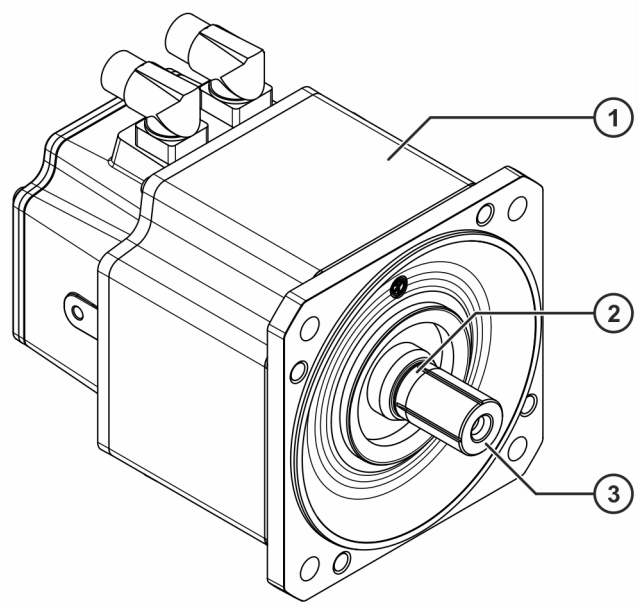

Fig. 9-6: Preparing a new motor A1-A3 for installation

1 Motor
2 O-ring
3 Involute toothing

9.2.4 Installing motor A2

Procedure

1. If a new motor is to be installed, remove any corrosion protection it may have prior to installation.
2. Clean the involute toothing of motor A2 and gear unit A2 before installation and apply a thin but continuous coat of Microlube GL 261 grease.
3. Clean the mounting surface of motor A2 on the motor mount.
4. Check the condition of the O-ring on the motor shaft; exchange if necessary.
5. Position sockets XM2 and XP2 as shown.
6. With the rope sling, pick up and insert motor A2, being careful not to tilt it.

Insertion of motor can be facilitated by turning it gently about its rotational axis.

7. Insert 4 M12x25-8.8-A2K Allen screws.
8. Tighten 4 M12x25-8.8-A2K Allen screws with a torque wrench in diagonally opposite sequence. Increase the tightening torque to the specified value in several stages.
9. Plug connectors XM2 and XP2 into the sockets. The pins and coding elements of the connectors must be taken into consideration. When inserting the connectors, turn them until they clearly lock into the coding elements (twist-proof).

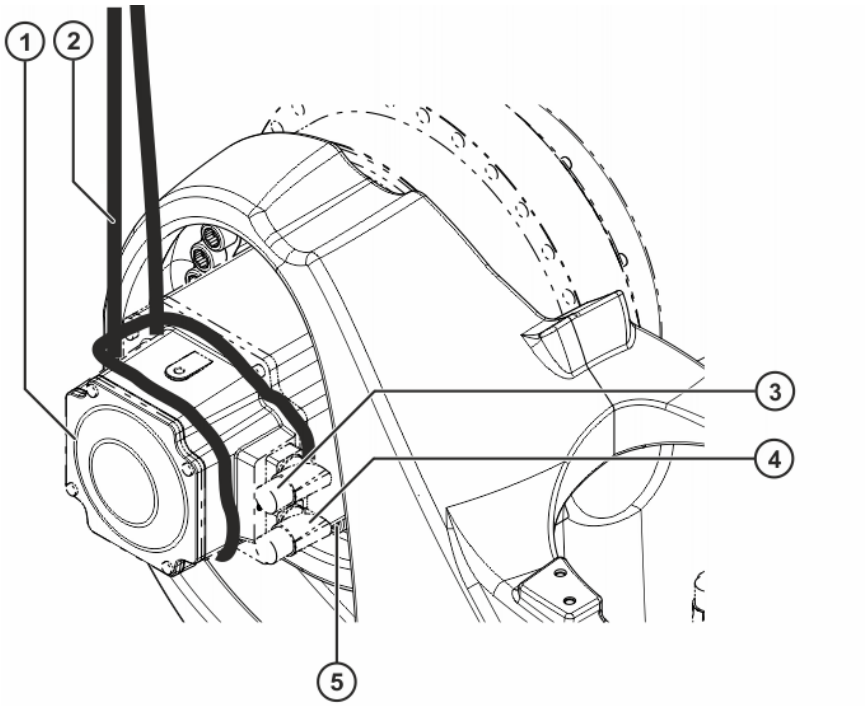

Fig. 9-7: Motor A2

1 Motor A2
2 Rope sling
3 Connector XM2
4 Connector XP2
5 M12x25-8.8-A2K Allen screw

9.2.5 Removing the equipment securing the link arm

Procedure

1. Slacken the rope sling and detach from the crane.
2. Remove the rope sling from the robot.

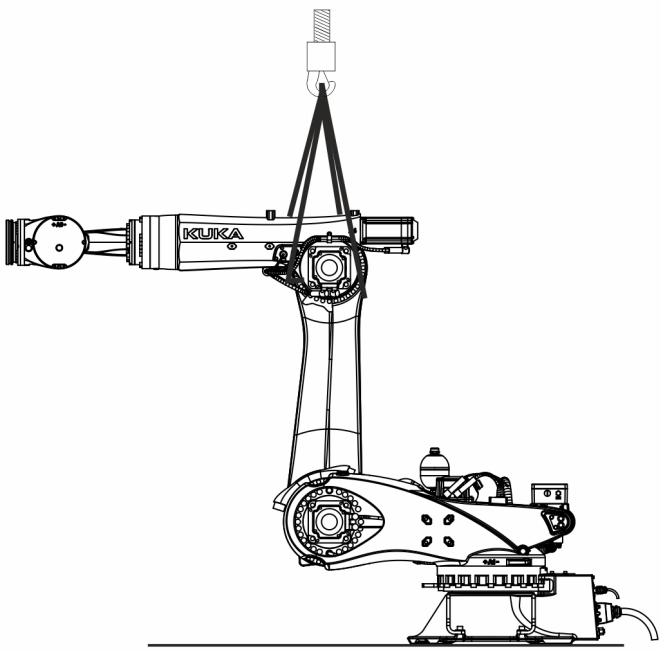

Fig. 9-8: Securing the link arm

9.2.6 Concluding work

The following concluding work must be carried out:

- Move A2 of the robot and look out for irregularities.
- Carry out mastering of A2.

Detailed information about mastering can be found in the system software documentation.

- Test the program in Manual Reduced Velocity (T1) mode.

9.3 Exchanging motor A3

Description

The following instructions describe the exchange of the motor. This description applies to floor-mounted robots. If the robot is installed in an inclined or suspended position, the procedure is to be applied analogously.

During removal of the motor, the robot can independently move about this axis. Mechanical auxiliary equipment (e.g. support, crane) or a stable end position (e.g. buffer) can be used to secure against motions.

Equipment

The following equipment is required:

Designation	Article number
Set of Allen keys 1.5; 2; 2.5; 3; 4; 5; 6; 8; 10 mm	-
Torque wrench min. 20 Nm to 100 Nm	-
Socket wrench set	-

Designation	Article number
Crane with sufficient load-bearing capacity	-
Rope sling with sufficient load-bearing capacity	-
Brush	-
SEMD/MEMD mastering kit	0000-228-936

Material

The following material is required:

Designation	Article number	Quantity
SPP motor 5.8kW L0 ME For the following machines: • KR 120 R3500-2 P • KR 120 R3500-2 P-C • KR 270 R3100-2 K	0000-334-484	1
SPP motor 5.5kW L0 ME For the following machines: • KR 120 R3900-2 K • KR 180 R3500-2 K • KR 210 R3300-2 K	0000-334-485	1
SPP motor 5.5kW L0 ME For the following machines: • KR 180 R3500-2 K-F • KR 210 R3300-2 K-F	0000-362-288	1
SPP motor 5.8kW L0 ME For the following machines: • KR 270 R3100-2 K-F	0000-362-289	1

Procurement of spare parts

Defective components must only be replaced with original spare parts from KUKA Deutschland GmbH. Non-compliance nullifies warranty and liability claims.

A “Repair Card” is supplied with the exchange parts. This must be completed and returned to KUKA Deutschland GmbH together with the defective component in the following cases.

- Within the warranty period
- If, after consultation with KUKA Deutschland GmbH, an examination of the defective component by KUKA is required.

Tightening torques

The tightening torques can be found under: (>>> *12.1 "Tightening torques" Page 385*)

These are valid for screws and nuts where no other specifications are given.

Screws of strength class 10.9 and higher, stainless steel screws of strength class 70 or 80, as well as screws with test certification may only be tightened once with the rated tightening torque. These screws must be replaced with new ones when they are slackened for the first time.

Precondition

- The robot is secured by means of an EMERGENCY STOP device. It must be ensured that the robot cannot be switched on by unauthorized persons.
- The removal site is freely accessible for work tasks involving a crane.

Work safety

CAUTION

Risk of burns on hot surfaces

The surfaces of the motors are often hot immediately after the robot has been decommissioned. Touching them may result in burns.

- Wear protective gloves.

WARNING

Danger to life and limb due to live parts

When work is performed on this system, live parts can lead to unintentional motions of the robot, positioner or other components. Failure to observe this may result in physical injuries and damage to property.

- If work is carried out on an operable system, the main switch on the control cabinet must be turned to the OFF position and secured with a padlock to prevent unauthorized persons from switching it on again.
- Inform the persons involved by means of a sign (e.g. affix a warning sign).
- Warn all persons concerned before putting the system back into operation.

WARNING

Danger to life and limb when working on live parts

Before commencing work on live parts of the robot system and/or on electrical systems, measures must be taken to ensure that the 5 safety rules are followed. It is essential that the 5 safety steps are followed in the correct order. Death, severe injuries or damage to property may result.

1. De-energize
2. Secure against unintentional restart
3. Ensure that the system is de-energized
4. Ground and short-circuit the system
5. Cover or erect barriers around neighboring energized parts

Once the work is completed, tools and equipment must be removed and the measures rescinded in reverse sequence.

DANGER

Danger to life and limb due to defective or unsuitable load suspension devices

If defective or non-approved load suspension devices are used, the load may fall off or start to swing. Failure to observe this can lead to death, injury or property damage.

- Before using load suspension devices, check for defects (e.g. damage, corrosion, deformation, wear, cracks) and exchange components if necessary.
- Use only inspected and approved load suspension devices.
- Use only load suspension devices with a sufficient load-bearing capacity.

WARNING

Risk of crushing during removal and installation of motor

When removing or installing the motor, there is a risk of injury by crushing. This could result in hand injuries.

- Wear protective gloves.

NOTICE

Wear and premature failure due to damage to toothing

Damage to the toothing of the motor and gear unit can lead to increased wear and premature failure of the components.

- During cleaning, ensure that the toothing is not damaged.
- Before installation, check the toothing of the motor and gear unit for damage.

To ensure safe use of our products, we recommend regularly requesting up-to-date safety data sheets from the manufacturers of auxiliary and operating materials.

9.3.1 Securing the robot arm

Procedure

1. Secure the robot arm with a rope sling and attach the rope sling to the crane hook.
2. Move the crane upwards until the rope sling is taut.

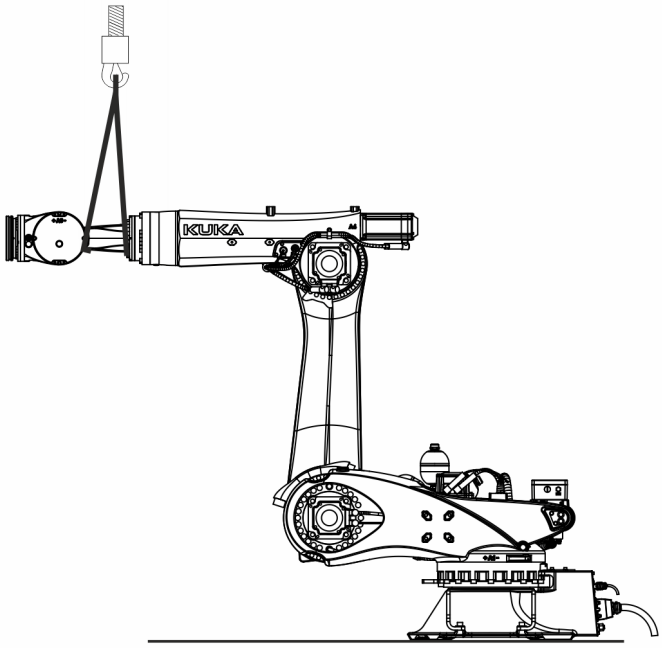

Fig. 9-9: Securing robot arm

9.3.2 Removing motor A3

Procedure

1. Release and unplug connectors XM3 and XP3 at the sockets.
2. Place the rope sling around motor A3 and raise it using the crane until the weight of motor A3 is supported by the rope sling.
3. Unscrew 4 M12x25-8.8-A2K Allen screws.
4. Release and carefully lift out motor A3, taking care not to tilt it.

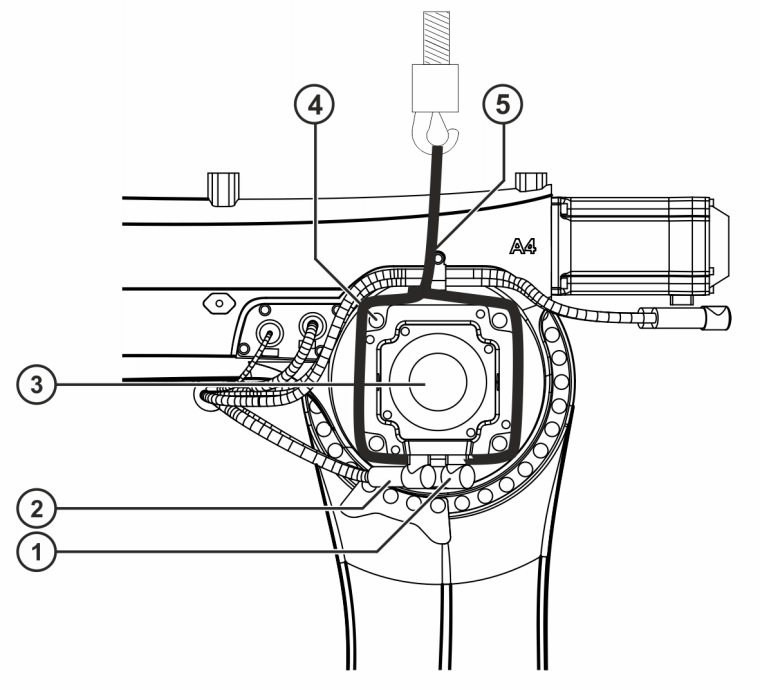

Fig. 9-10: Motor A3

1 Connector XM3
2 Connector XP3
3 Motor A3
4 M12x25-8.8-A2K Allen screw
5 Rope sling

5. Remove protective tube A3 (not required with the upgrade).

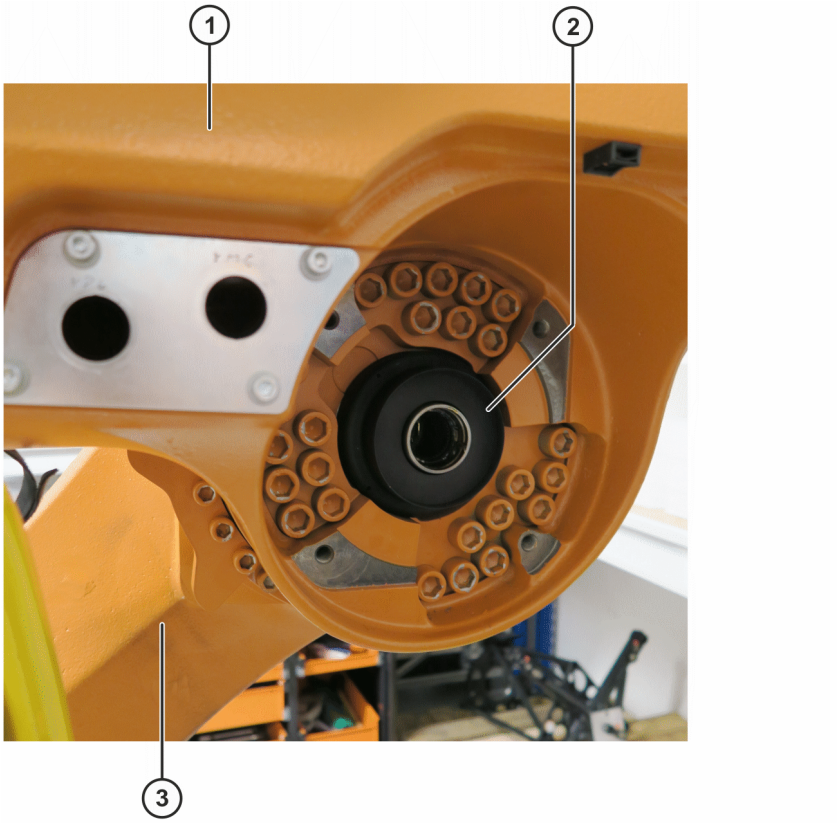

Fig. 9-11: Protective tube A3

1 Robot arm
2 Protective tube A3
3 Link arm

6. Cover the aperture on motor mount A3 and protect it against fouling.
7. If the motor is not to be reinstalled, it must be disposed of properly or protected against corrosion before being put into storage.

9.3.3 Preparing a new motor for installation

Procedure

1. Clean the involute toothing of motor and gear unit before installation and apply a thin but continuous coat of Microlube GL 261 grease.
2. Clean the mounting surface for the motor.
3. Check the condition of the O-ring on the motor shaft. In the case of damage and/or wear, the O-ring must be exchanged.

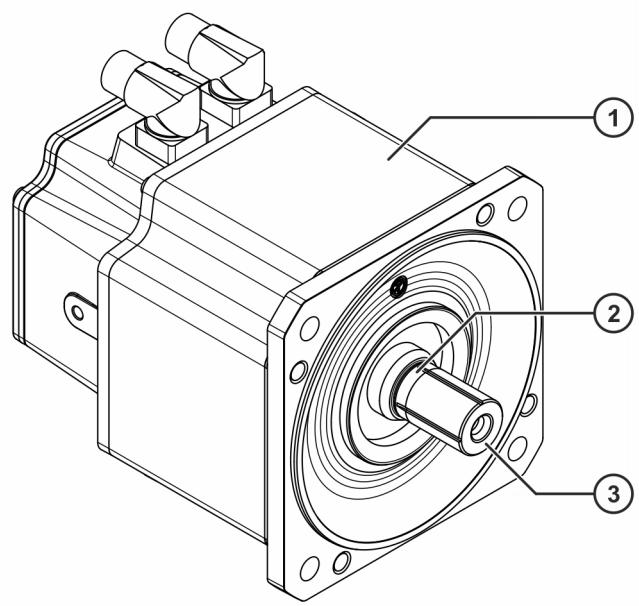

Fig. 9-12: Preparing a new motor A1-A3 for installation

1 Motor
2 O-ring
3 Involute toothing

9.3.4 Installing motor A3

Procedure

1. If a new motor is to be installed, remove any corrosion protection it may have prior to installation.
2. Clean the toothing of motor A3 and gear unit A3 before installation and apply a thin but continuous coat of Microlube GL 261 grease.
3. Clean the mounting surface of motor A3 on gear unit A3.
4. Check the condition of the O-ring on the motor shaft; exchange if necessary.
5. Insert protective tube A3 (not removed with the upgrade).

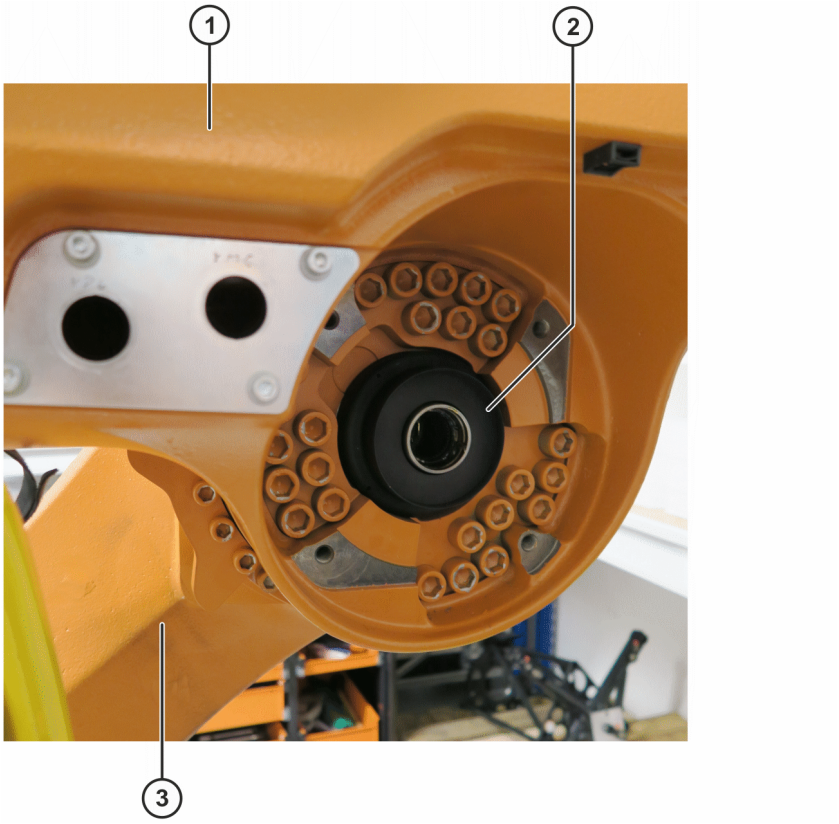

Fig. 9-13: Protective tube A3

1 Robot arm
2 Protective tube A3
3 Link arm

6. With the rope sling, pick up and insert motor A3, being careful not to tilt it.

> Insertion of motor can be facilitated by turning it gently about its rotational axis.

7. Insert 4 M12x25-8.8-A2K Allen screws.
8. Tighten 4 M12x25-8.8-A2K Allen screws with a torque wrench in diagonally opposite sequence. Increase the tightening torque to the specified value in several stages.
9. Position sockets XM3 and XP3 as shown.
10. Plug connectors XM3 and XP3 into the sockets. The pins and coding elements of the connectors must be taken into consideration. When inserting the connectors, turn them until they clearly lock into the coding elements (twist-proof).

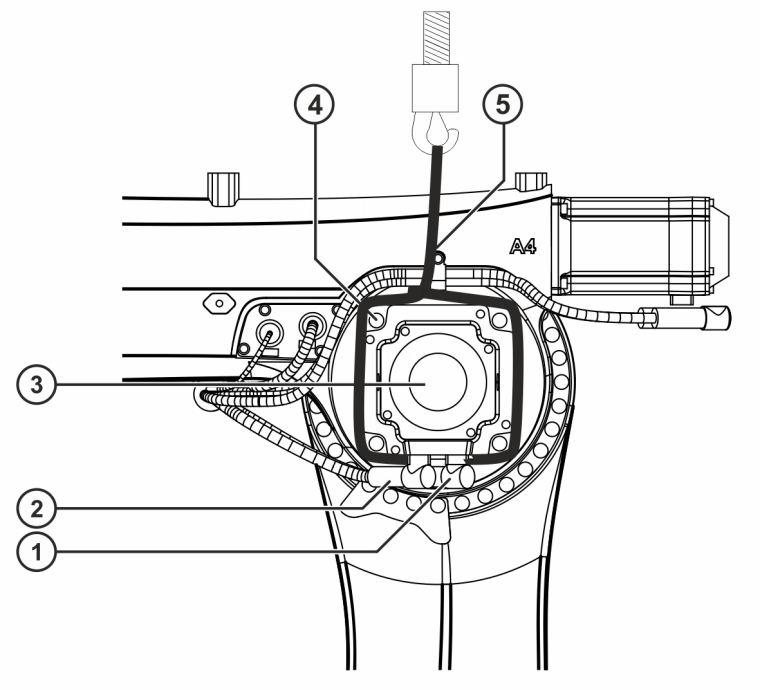

Fig. 9-14: Motor A3

1 Connector XM3
2 Connector XP3
3 Motor A3
4 M12x25-8.8-A2K Allen screw
5 Rope sling

9.3.5 Removing the equipment securing the robot arm

Procedure

1. Slacken the rope sling and detach from the crane.
2. Remove the rope sling from the robot arm.

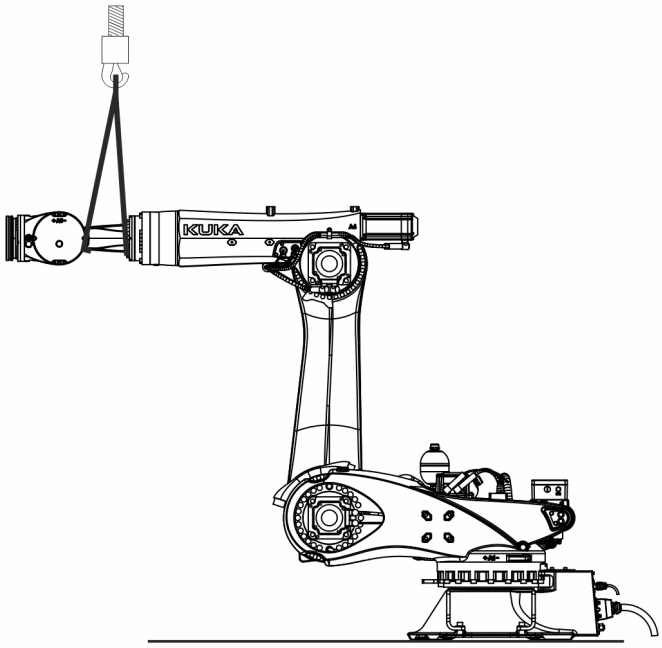

Fig. 9-15: Securing robot arm

9.3.6 Concluding work

The following concluding work must be carried out:

- Move A3 of the robot and look out for irregularities.
- Carry out mastering of A3.

Detailed information about mastering can be found in the system software documentation.

- Test the program in Manual Reduced Velocity mode (T1).

9.4 Exchanging motor A4

Description

The following instructions describe the exchange of the motor. This description applies to floor-mounted robots. If the robot is installed in an inclined or suspended position, the procedure is to be applied analogously.

During removal of the motor, the robot can independently move about this axis. Mechanical auxiliary equipment (e.g. support, crane) or a stable end position (e.g. buffer) can be used to secure against motions.

Equipment

The following equipment is required:

Designation	Article number
Set of Allen keys 1.5; 2; 2.5; 3; 4; 5; 6; 8; 10 mm	-
Torque wrench min. 5 Nm to 50 Nm	-
Socket wrench set	-
Brush	-

Designation	Article number
SEMD/MEMD mastering kit	0000-228-936

Material

The following material is required:

Designation	Article number	Quantity
SPP motor 2.5kW L0 ME For the following machines: • KR 120 R3500-2 P • KR 120 R3500-2 P-C • KR 210 R3300-2 K • KR 270 R3100-2 K	0000-334-482	1
SPP motor 1.7kW L0 ME For the following machines: • KR 120 R3900-2 K • KR 180 R3500-2 K	0000-336-054	1
SPP motor 1.7kW L0 ME For the following machines: • KR 180 R3500-2 K-F	0000-362-271	1
SPP motor 2.5kW L0 ME For the following machines: • KR 210 R3300-2 K-F • KR 270 R3100-2 K-F	0000-362-287	1

Procurement of spare parts

Defective components must only be replaced with original spare parts from KUKA Deutschland GmbH. Non-compliance nullifies warranty and liability claims.

A “Repair Card” is supplied with the exchange parts. This must be completed and returned to KUKA Deutschland GmbH together with the defective component in the following cases.

- Within the warranty period
- If, after consultation with KUKA Deutschland GmbH, an examination of the defective component by KUKA is required.

Tightening torques

The tightening torques can be found under: (>>> *12.1 "Tightening torques" Page 385*)

These are valid for screws and nuts where no other specifications are given.

Screws of strength class 10.9 and higher, stainless steel screws of strength class 70 or 80, as well as screws with test certification may only be tightened once with the rated tightening torque. These screws must be replaced with new ones when they are slackened for the first time.

Precondition

- The robot must be prevented from tipping. If necessary, fasten the robot to the mounting base.
- The robot is secured against axis motions.
- There is no hazard posed by other system components.
- Tools have been removed.

Work safety

CAUTION

Risk of burns on hot surfaces

The surfaces of the motors are often hot immediately after the robot has been decommissioned. Touching them may result in burns.

- Wear protective gloves.

WARNING

Danger to life and limb due to live parts

When work is performed on this system, live parts can lead to unintentional motions of the robot, positioner or other components. Failure to observe this may result in physical injuries and damage to property.

- If work is carried out on an operable system, the main switch on the control cabinet must be turned to the OFF position and secured with a padlock to prevent unauthorized persons from switching it on again.
- Inform the persons involved by means of a sign (e.g. affix a warning sign).
- Warn all persons concerned before putting the system back into operation.

WARNING

Danger to life and limb when working on live parts

Before commencing work on live parts of the robot system and/or on electrical systems, measures must be taken to ensure that the 5 safety rules are followed. It is essential that the 5 safety steps are followed in the correct order. Death, severe injuries or damage to property may result.

1. De-energize
2. Secure against unintentional restart
3. Ensure that the system is de-energized
4. Ground and short-circuit the system
5. Cover or erect barriers around neighboring energized parts

Once the work is completed, tools and equipment must be removed and the measures rescinded in reverse sequence.

DANGER

Danger to life and limb due to defective or unsuitable load suspension devices

If defective or non-approved load suspension devices are used, the load may fall off or start to swing. Failure to observe this can lead to death, injury or property damage.

- Before using load suspension devices, check for defects (e.g. damage, corrosion, deformation, wear, cracks) and exchange components if necessary.
- Use only inspected and approved load suspension devices.
- Use only load suspension devices with a sufficient load-bearing capacity.

WARNING

Risk of crushing during removal and installation of motor

When removing or installing the motor, there is a risk of injury by crushing. This could result in hand injuries.

- Wear protective gloves.

NOTICE

Wear and premature failure due to damage to toothing

Damage to the toothing of the motor and gear unit can lead to increased wear and premature failure of the components.

- During cleaning, ensure that the toothing is not damaged.
- Before installation, check the toothing of the motor and gear unit for damage.

To ensure safe use of our products, we recommend regularly requesting up-to-date safety data sheets from the manufacturers of auxiliary and operating materials.

9.4.1 Removing motor A4

Description

The following work steps are identical for motor A4 and motor A5.

Procedure

1. Release and unplug connectors XM4 and XP4 at the sockets.
2. Unscrew 4 M8x25-8.8-A2K Allen screws from motor A4.
3. Release motor A4 and pull it out together with connecting shaft A4, being careful not to tilt it.
4. Set down motor A4 together with connecting shaft A4.

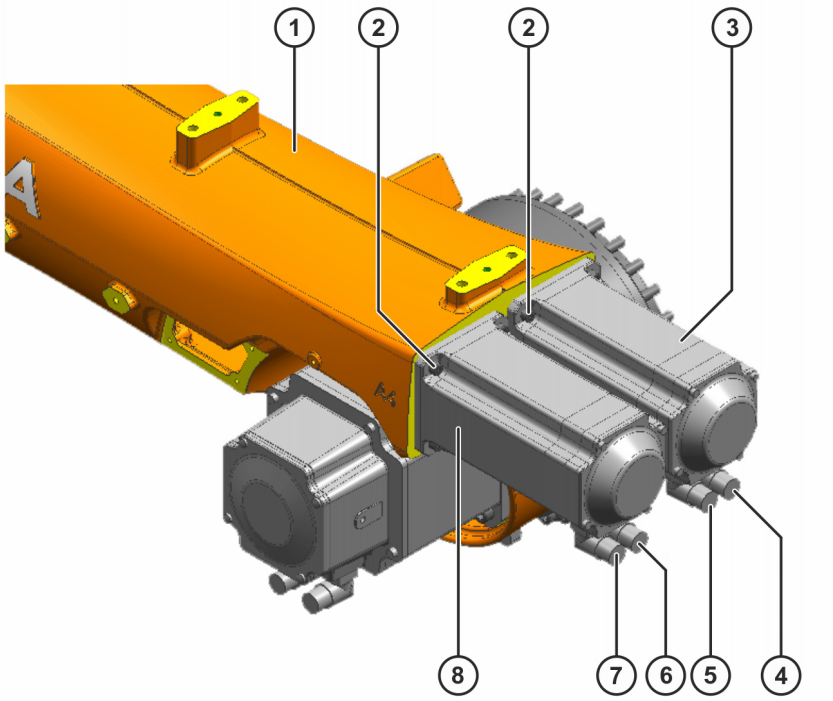

Fig. 9-16: Motors A4 and A5

1 Robot arm
2 M8x25-8.8-A2K Allen screw
3 Motor A5
4 Connector XM5
5 Connector XP5
6 Connector XM4
7 Connector XP4
8 Motor A4

5. Pull connecting shaft A4 off motor shaft.
6. Take compression spring and, if applicable, back-up ring off the motor shaft.

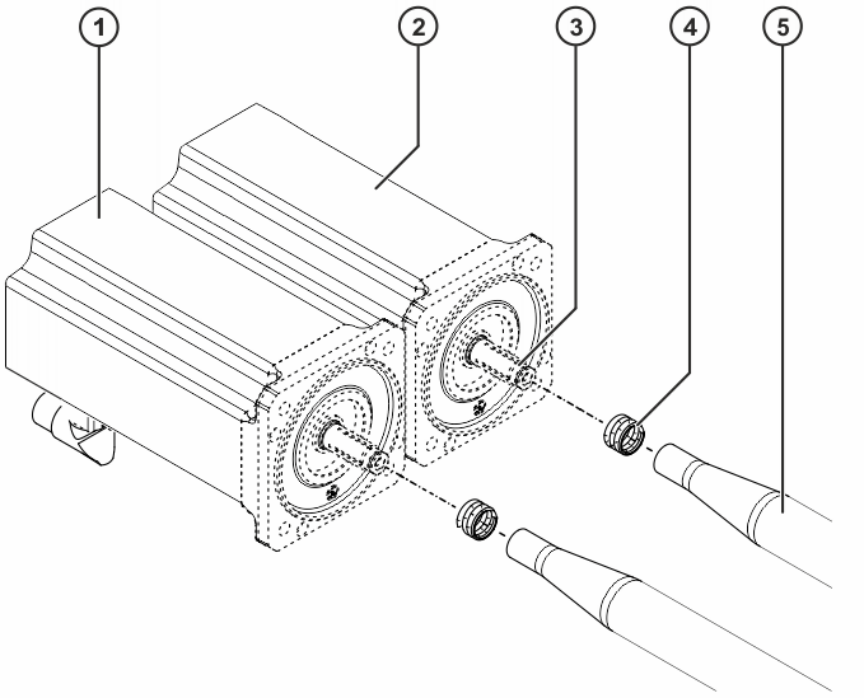

Fig. 9-17: Connecting shafts A4 and A5

1 Motor A5
2 Motor A4
3 Motor shaft with involute toothing
4 Compression spring
5 Connecting shaft A4

7. If the motor is not to be reinstalled, it must be disposed of properly or protected against corrosion before being put into storage.

9.4.2 Preparing the new motor A4 - A5 for installation

Description

The following work steps are identical for motor A4 and motor A5.

Procedure

1. Clean the involute toothing of motor and connecting shaft before installation and apply a thin but continuous coat of Microlube GL 261 grease.
2. Clean the mounting surface for the motor.
3. Check the condition of the compression spring and, if applicable, back-up ring on the motor shaft.

   If there was a back-up ring on the motor shaft when the motor was removed, it must be disposed of and not reused on installing a new motor.

   In the case of damage and/or wear, the compression spring must be exchanged.

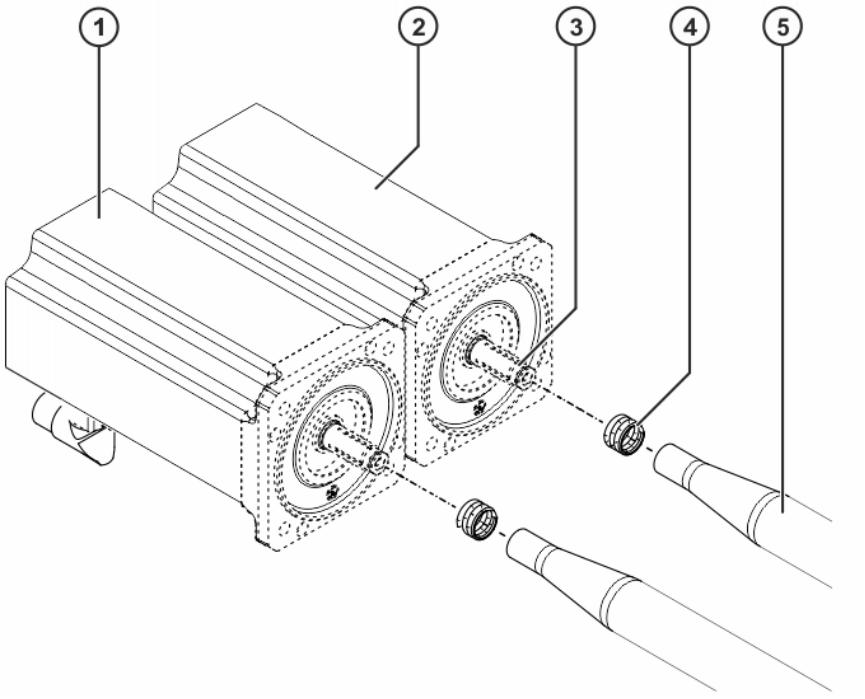

Fig. 9-18: Connecting shafts A4 and A5

1 Motor A5
2 Motor A4
3 Motor shaft with involute toothing
4 Compression spring
5 Connecting shaft A4

9.4.3 Installing motor A4

Description

The following work steps are identical for motor A4 and motor A5.

Procedure

1. If a new motor is to be installed, remove any corrosion protection it may have prior to installation.
2. Clean the toothing on connecting shaft A4 and motor shaft A4, and check for wear.
   In the case of damage and/or wear, connecting shaft A4 must be exchanged.
3. Apply a thin but continuous coat of Microlube GL 261 to the toothing on connecting shaft A4.
4. Mount compression spring on motor shaft A5.
   If there was a back-up ring on the motor shaft when the motor was removed, it must be disposed of and not reused on installing a new motor.
5. Push connecting shaft A4 onto motor shaft A4.

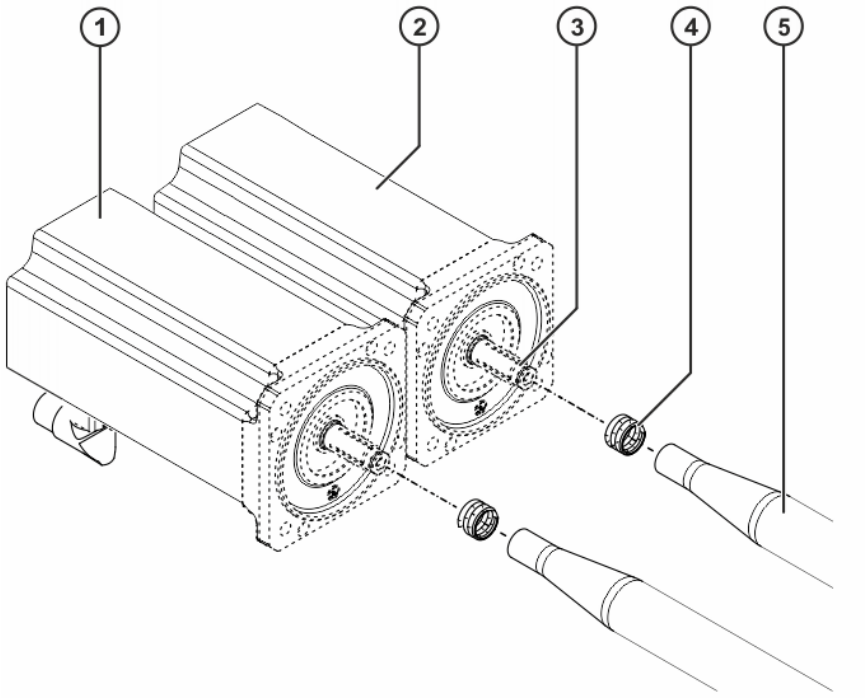

Fig. 9-19: Connecting shafts A4 and A5

1 Motor A5
2 Motor A4
3 Motor shaft with involute toothing
4 Compression spring
5 Connecting shaft A4

6. The mounting surfaces (motor A4 and robot arm) must be dry and free of dust.
7. Position sockets XM4 and XP4 so that they are located on the underside after motor A4 has been inserted into the robot arm.
8. Pick up motor A4 and insert it into the robot arm, being careful not to tilt it and ensuring that the connecting shafts (toothing) are correctly engaged in the in-line wrist.

Insertion of motor can be facilitated by turning it gently about its rotational axis.

9. Insert 4 M8x25-8.8-A2K Allen screws.
10. Tighten 4 M8x25-8.8-A2K Allen screws with a torque wrench in diagonally opposite sequence. Increase the tightening torque to the specified value in several stages.
11. Plug connectors XM4 and XP4 into the sockets. The pins and coding elements of the connectors must be taken into consideration. When inserting the connectors, turn them until they clearly lock into the coding elements (twist-proof).

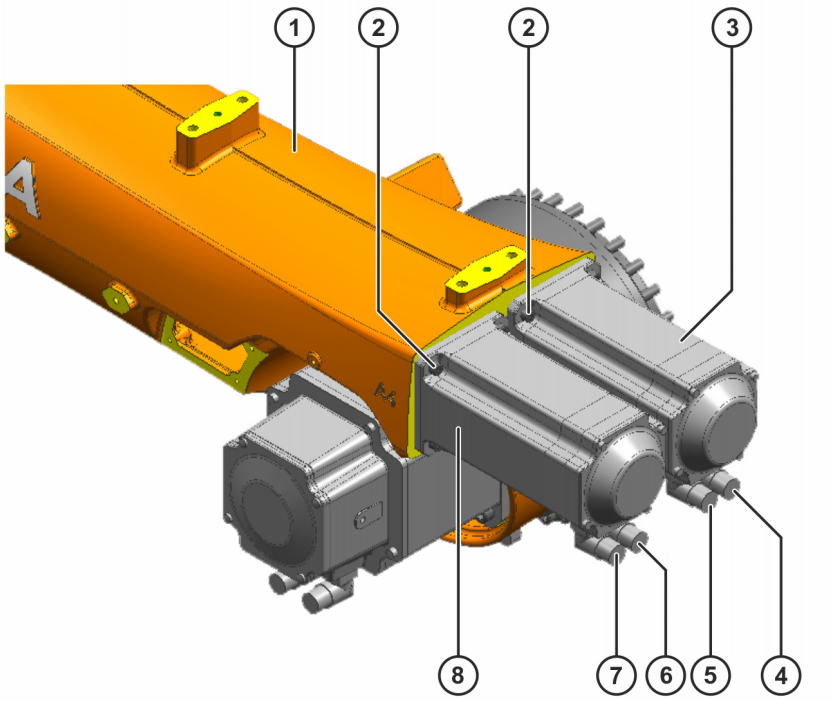

Fig. 9-20: Motors A4 and A5

1 Robot arm
2 M8x25-8.8-A2K Allen screw
3 Motor A5
4 Connector XM5
5 Connector XP5
6 Connector XM4
7 Connector XP4
8 Motor A4

9.4.4 Concluding work

The following concluding work must be carried out:

- Move A4, A5 and A6 of the robot and look out for irregularities.
- Carry out mastering of A4, A5 and A6.

Detailed information about mastering can be found in the system software documentation.

- Test the program in Manual Reduced Velocity mode (T1).

9.5 Exchanging motor A5

Description

The following instructions describe the exchange of the motor. This description applies to floor-mounted robots. If the robot is installed in an inclined or suspended position, the procedure is to be applied analogously.

During removal of the motor, the robot can independently move about this axis. Mechanical auxiliary equipment (e.g. support, crane) or a stable end position (e.g. buffer) can be used to secure against motions.

Equipment

The following equipment is required:

Designation	Article number
Set of Allen keys 1.5; 2; 2.5; 3; 4; 5; 6; 8; 10 mm	-
Torque wrench min. 5 Nm to 50 Nm	-
Socket wrench set	-
Brush	-
SEMD/MEMD mastering kit	0000-228-936

Material

The following material is required:

Designation	Article number	Quantity
SPP motor 2.5kW L0 ME For the following machines: • KR 120 R3500-2 P • KR 120 R3500-2 P-C • KR 210 R3300-2 K • KR 270 R3100-2 K	0000-334-482	1
SPP motor 1.7kW L0 ME For the following machines: • KR 120 R3900-2 K • KR 180 R3500-2 K	0000-336-054	1
SPP motor 1.7kW L0 ME For the following machines: • KR 180 R3500-2 K-F	0000-362-271	1
SPP motor 2.5kW L0 ME For the following machines: • KR 210 R3300-2 K-F • KR 270 R3100-2 K-F	0000-362-287	1

Procurement of spare parts

Defective components must only be replaced with original spare parts from KUKA Deutschland GmbH. Non-compliance nullifies warranty and liability claims.

A “Repair Card” is supplied with the exchange parts. This must be completed and returned to KUKA Deutschland GmbH together with the defective component in the following cases.

- Within the warranty period
- If, after consultation with KUKA Deutschland GmbH, an examination of the defective component by KUKA is required.

Tightening torques

The tightening torques can be found under: (>>> *12.1 "Tightening torques" Page 385*)

These are valid for screws and nuts where no other specifications are given.

Screws of strength class 10.9 and higher, stainless steel screws of strength class 70 or 80, as well as screws with test certification may only be tightened once with the rated tightening torque. These screws must be replaced with new ones when they are slackened for the first time.

Precondition

- The robot must be prevented from tipping. If necessary, fasten the robot to the mounting base.
- The robot is secured against axis motions.
- There is no hazard posed by other system components.
- Tools have been removed.

Work safety

CAUTION

Risk of burns on hot surfaces

The surfaces of the motors are often hot immediately after the robot has been decommissioned. Touching them may result in burns.

- Wear protective gloves.

WARNING

Danger to life and limb due to live parts

When work is performed on this system, live parts can lead to unintentional motions of the robot, positioner or other components. Failure to observe this may result in physical injuries and damage to property.

- If work is carried out on an operable system, the main switch on the control cabinet must be turned to the OFF position and secured with a padlock to prevent unauthorized persons from switching it on again.
- Inform the persons involved by means of a sign (e.g. affix a warning sign).
- Warn all persons concerned before putting the system back into operation.

WARNING

Danger to life and limb when working on live parts

Before commencing work on live parts of the robot system and/or on electrical systems, measures must be taken to ensure that the 5 safety rules are followed. It is essential that the 5 safety steps are followed in the correct order. Death, severe injuries or damage to property may result.

1. De-energize
2. Secure against unintentional restart
3. Ensure that the system is de-energized
4. Ground and short-circuit the system
5. Cover or erect barriers around neighboring energized parts

Once the work is completed, tools and equipment must be removed and the measures rescinded in reverse sequence.

DANGER

Danger to life and limb due to defective or unsuitable load suspension devices

If defective or non-approved load suspension devices are used, the load may fall off or start to swing. Failure to observe this can lead to death, injury or property damage.

- Before using load suspension devices, check for defects (e.g. damage, corrosion, deformation, wear, cracks) and exchange components if necessary.
- Use only inspected and approved load suspension devices.
- Use only load suspension devices with a sufficient load-bearing capacity.

WARNING

Risk of crushing during removal and installation of motor

When removing or installing the motor, there is a risk of injury by crushing. This could result in hand injuries.

- Wear protective gloves.

NOTICE

Wear and premature failure due to damage to toothing

Damage to the toothing of the motor and gear unit can lead to increased wear and premature failure of the components.

- During cleaning, ensure that the toothing is not damaged.
- Before installation, check the toothing of the motor and gear unit for damage.

To ensure safe use of our products, we recommend regularly requesting up-to-date safety data sheets from the manufacturers of auxiliary and operating materials.

9.5.1 Removing motor A5

Description

The following work steps are identical for motor A4 and motor A5.

Procedure

1. Release and unplug connectors XM5 and XP5 at the sockets.
2. Unscrew 4 M8x25-8.8-A2K Allen screws from motor A5.
3. Release motor A5 and pull it out together with connecting shaft A5, being careful not to tilt it.
4. Set down motor A5 together with connecting shaft A5.

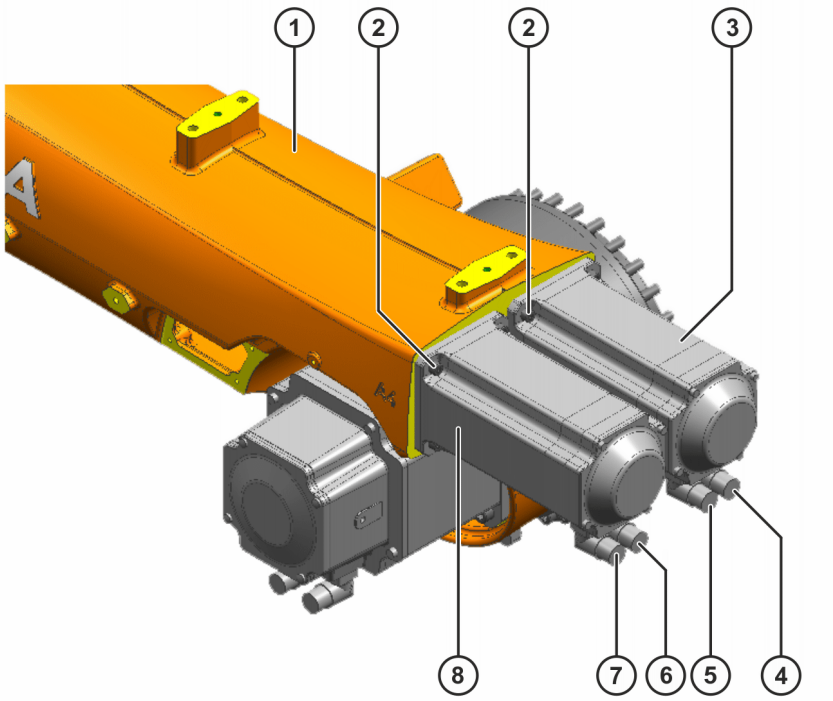

Fig. 9-21: Motors A4 and A5

1 Robot arm
2 M8x25-8.8-A2K Allen screw
3 Motor A5
4 Connector XM5
5 Connector XP5
6 Connector XM4
7 Connector XP4
8 Motor A4

5. Pull connecting shaft A5 off motor shaft.
6. Take compression spring and, if applicable, back-up ring off the motor shaft.

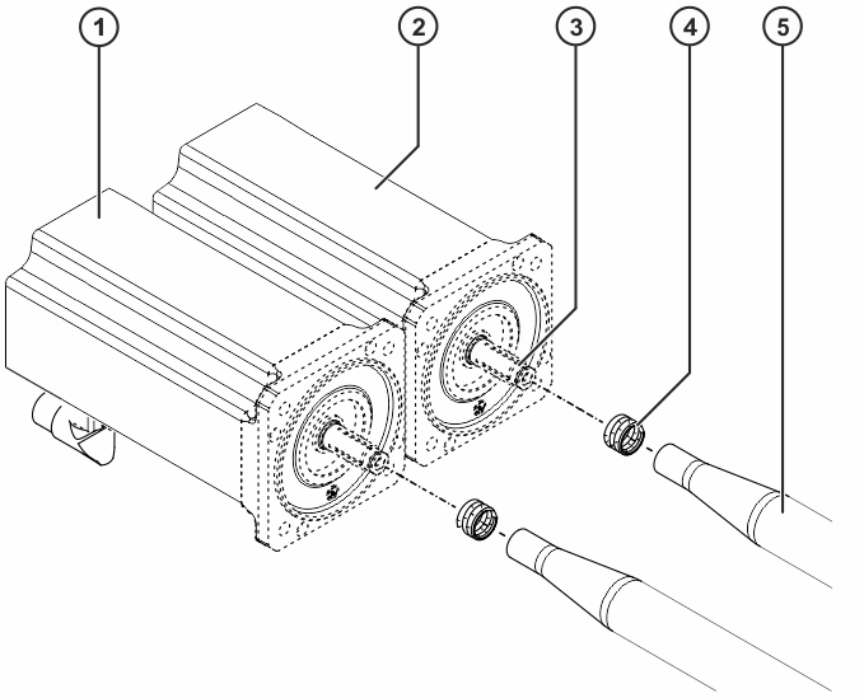

Fig. 9-22: Connecting shafts A4 and A5

1 Motor A5
2 Motor A4
3 Motor shaft with involute toothing
4 Compression spring
5 Connecting shaft A4

7. If the motor is not to be reinstalled, it must be disposed of properly or protected against corrosion before being put into storage.

9.5.2 Preparing the new motor A4 - A5 for installation

Description

The following work steps are identical for motor A4 and motor A5.

Procedure

1. Clean the involute toothing of motor and connecting shaft before installation and apply a thin but continuous coat of Microlube GL 261 grease.
2. Clean the mounting surface for the motor.
3. Check the condition of the compression spring and, if applicable, back-up ring on the motor shaft.

   If there was a back-up ring on the motor shaft when the motor was removed, it must be disposed of and not reused on installing a new motor.

   In the case of damage and/or wear, the compression spring must be exchanged.

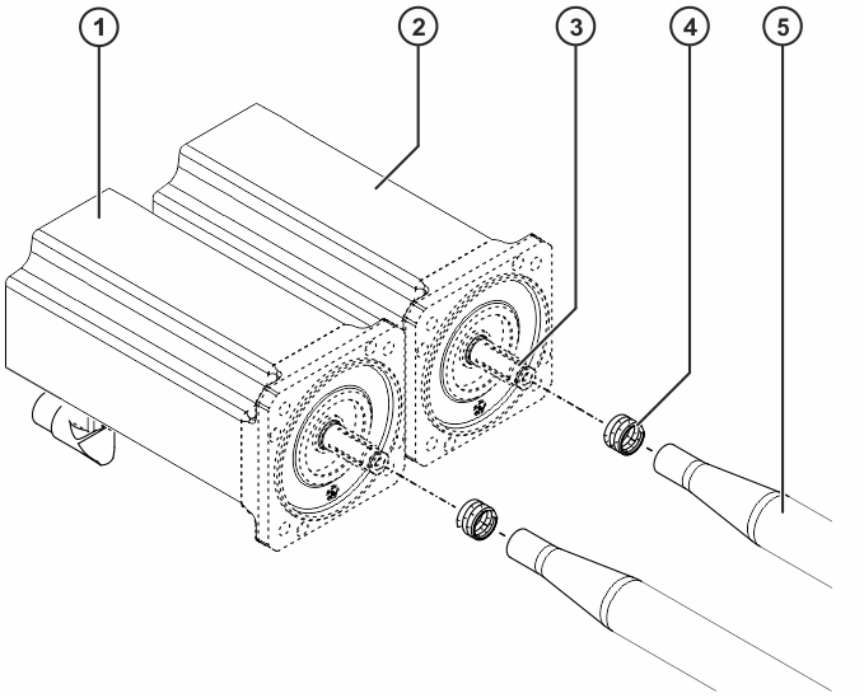

Fig. 9-23: Connecting shafts A4 and A5

1 Motor A5
2 Motor A4
3 Motor shaft with involute toothing
4 Compression spring
5 Connecting shaft A4

9.5.3 Installing motor A5

Description

The following work steps are identical for motor A4 and motor A5.

Procedure

1. If a new motor is to be installed, remove any corrosion protection it may have prior to installation.
2. Clean the toothing on connecting shaft A5 and motor shaft A5, and check for wear.
   In the case of damage and/or wear, connecting shaft A5 must be exchanged.
3. Apply a thin but continuous coat of Microlube GL 261 to the toothing on connecting shaft A5.
4. Mount compression spring on motor shaft A5.
   If there was a back-up ring on the motor shaft when the motor was removed, it must be disposed of and not reused on installing a new motor.
5. Push connecting shaft A5 onto motor shaft A5.

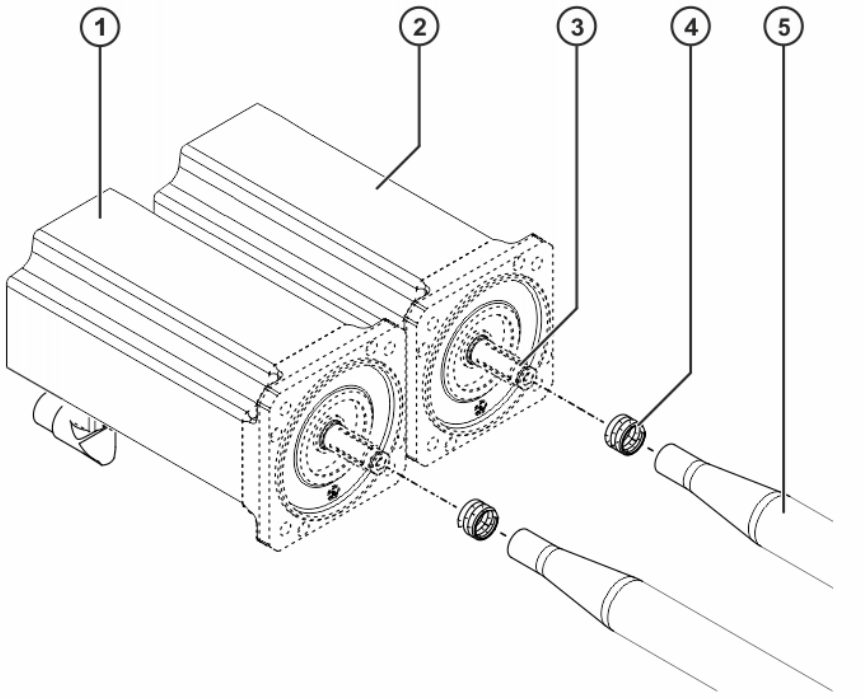

Fig. 9-24: Connecting shafts A4 and A5

1 Motor A5
2 Motor A4
3 Motor shaft with involute toothing
4 Compression spring
5 Connecting shaft A4

6. The mounting surfaces (motor A5 and robot arm) must be dry and free of dust.
7. Position sockets XM5 and XP5 so that they are located on the underside after motor A5 has been inserted into the robot arm.
8. Pick up motor A5 and insert it into the robot arm, being careful not to tilt it and ensuring that the connecting shafts (toothing) are correctly engaged in the in-line wrist.

Insertion of motor can be facilitated by turning it gently about its rotational axis.

9. Insert 4 M8x25-8.8-A2K Allen screws.
10. Tighten 4 M8x25-8.8-A2K Allen screws with a torque wrench in diagonally opposite sequence. Increase the tightening torque to the specified value in several stages.
11. Plug connectors XM5 and XP5 into the sockets. The pins and coding elements of the connectors must be taken into consideration. When inserting the connectors, turn them until they clearly lock into the coding elements (twist-proof).

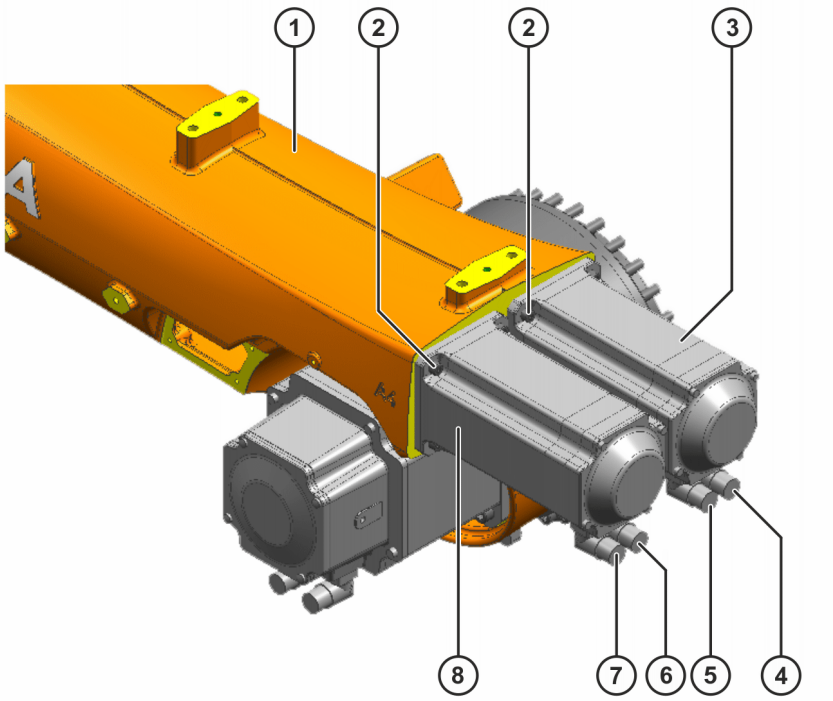

Fig. 9-25: Motors A4 and A5

1 Robot arm
2 M8x25-8.8-A2K Allen screw
3 Motor A5
4 Connector XM5
5 Connector XP5
6 Connector XM4
7 Connector XP4
8 Motor A4

9.5.4 Concluding work

The following concluding work must be carried out:

- Move A4, A5 and A6 of the robot and look out for irregularities.
- Carry out mastering of A4, A5 and A6.

Detailed information about mastering can be found in the system software documentation.

- Test the program in Manual Reduced Velocity mode (T1).

9.6 Exchanging motor A6

Description

The following instructions describe the exchange of the motor. This description applies to floor-mounted robots. If the robot is installed in an inclined or suspended position, the procedure is to be applied analogously.

During removal of the motor, the robot can independently move about this axis. Mechanical auxiliary equipment (e.g. support, crane) or a stable end position (e.g. buffer) can be used to secure against motions.

Equipment

The following equipment is required:

Designation	Article number
Set of Allen keys 1.5; 2; 2.5; 3; 4; 5; 6; 8; 10 mm	-
Torque wrench min. 5 Nm to 50 Nm	-
Socket wrench set	-
Crane with sufficient load-bearing capacity	-
Rope sling with sufficient load-bearing capacity	-
Brush	-
SEMD/MEMD mastering kit	0000-228-936

Material

The following material is required:

Designation	Article number	Quantity
SPP motor 2.5kW L1 ME For the following machines: • KR 120 R3500-2 P • KR 120 R3500-2 P-C • KR 120 R3900-2 K • KR 180 R3500-2 K • KR 210 R3300-2 K • KR 270 R3100-2 K	0000-334-483	1
SPP motor 2.5kW L0 ME For the following machines: • KR 180 R3500-2 K-F • KR 210 R3300-2 K-F • KR 270 R3100-2 K-F	0000-362-270	1

Procurement of spare parts

Defective components must only be replaced with original spare parts from KUKA Deutschland GmbH. Non-compliance nullifies warranty and liability claims.

A “Repair Card” is supplied with the exchange parts. This must be completed and returned to KUKA Deutschland GmbH together with the defective component in the following cases.

- Within the warranty period
- If, after consultation with KUKA Deutschland GmbH, an examination of the defective component by KUKA is required.

Tightening torques

The tightening torques can be found under: (>>> *12.1 "Tightening torques" Page 385*)

These are valid for screws and nuts where no other specifications are given.

Screws of strength class 10.9 and higher, stainless steel screws of strength class 70 or 80, as well as screws with test certification may only be tightened once with the rated tightening torque. These screws must be replaced with new ones when they are slackened for the first time.

Precondition

- The robot must be prevented from tipping. If necessary, fasten the robot to the mounting base.
- The robot is secured against axis motions.
- There is no hazard posed by other system components.
- Tools have been removed.

Work safety

CAUTION

Risk of burns on hot surfaces

The surfaces of the motors are often hot immediately after the robot has been decommissioned. Touching them may result in burns.

- Wear protective gloves.

WARNING

Danger to life and limb due to live parts

When work is performed on this system, live parts can lead to unintentional motions of the robot, positioner or other components. Failure to observe this may result in physical injuries and damage to property.

- If work is carried out on an operable system, the main switch on the control cabinet must be turned to the OFF position and secured with a padlock to prevent unauthorized persons from switching it on again.
- Inform the persons involved by means of a sign (e.g. affix a warning sign).
- Warn all persons concerned before putting the system back into operation.

WARNING

Danger to life and limb when working on live parts

Before commencing work on live parts of the robot system and/or on electrical systems, measures must be taken to ensure that the 5 safety rules are followed. It is essential that the 5 safety steps are followed in the correct order. Death, severe injuries or damage to property may result.

1. De-energize
2. Secure against unintentional restart
3. Ensure that the system is de-energized
4. Ground and short-circuit the system
5. Cover or erect barriers around neighboring energized parts

Once the work is completed, tools and equipment must be removed and the measures rescinded in reverse sequence.

DANGER

Danger to life and limb due to defective or unsuitable load suspension devices

If defective or non-approved load suspension devices are used, the load may fall off or start to swing. Failure to observe this can lead to death, injury or property damage.

- Before using load suspension devices, check for defects (e.g. damage, corrosion, deformation, wear, cracks) and exchange components if necessary.
- Use only inspected and approved load suspension devices.
- Use only load suspension devices with a sufficient load-bearing capacity.

WARNING

Risk of crushing during removal and installation of motor

When removing or installing the motor, there is a risk of injury by crushing. This could result in hand injuries.

- Wear protective gloves.

NOTICE

Wear and premature failure due to damage to toothing

Damage to the toothing of the motor and gear unit can lead to increased wear and premature failure of the components.

- During cleaning, ensure that the toothing is not damaged.
- Before installation, check the toothing of the motor and gear unit for damage.

To ensure safe use of our products, we recommend regularly requesting up-to-date safety data sheets from the manufacturers of auxiliary and operating materials.

9.6.1 Removing motor A4

Description

The following work steps are identical for motor A4 and motor A5.

Procedure

1. Release and unplug connectors XM4 and XP4 at the sockets.
2. Unscrew 4 M8x25-8.8-A2K Allen screws from motor A4.
3. Release motor A4 and pull it out together with connecting shaft A4, being careful not to tilt it.
4. Set down motor A4 together with connecting shaft A4.

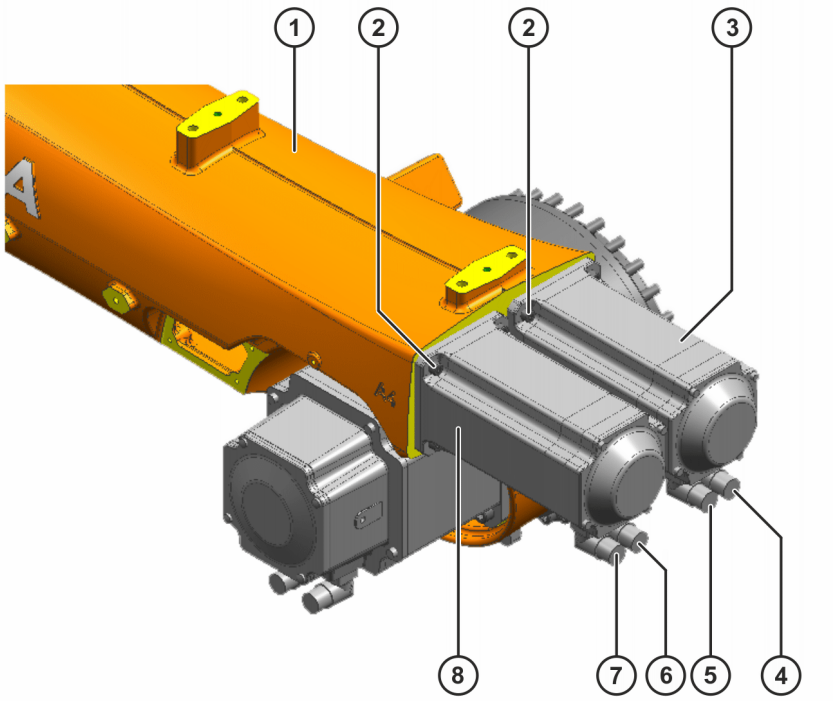

Fig. 9-26: Motors A4 and A5

1 Robot arm
2 M8x25-8.8-A2K Allen screw
3 Motor A5
4 Connector XM5
5 Connector XP5
6 Connector XM4
7 Connector XP4
8 Motor A4

5. Pull connecting shaft A4 off motor shaft.
6. Take compression spring and, if applicable, back-up ring off the motor shaft.

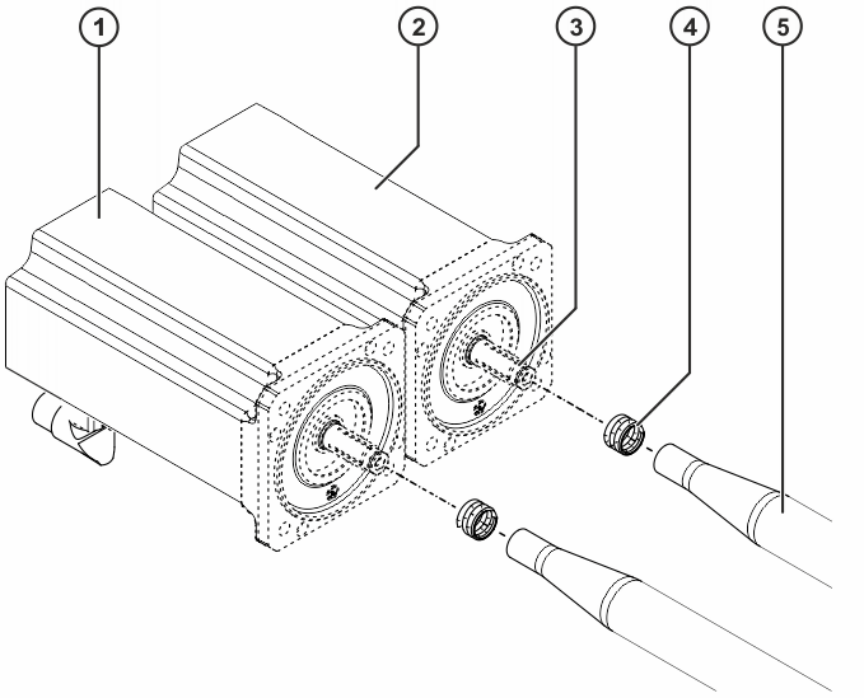

Fig. 9-27: Connecting shafts A4 and A5

1 Motor A5
2 Motor A4
3 Motor shaft with involute toothing
4 Compression spring
5 Connecting shaft A4

7. If the motor is not to be reinstalled, it must be disposed of properly or protected against corrosion before being put into storage.

9.6.2 Removing motor A5

Description

The following work steps are identical for motor A4 and motor A5.

Procedure

1. Release and unplug connectors XM5 and XP5 at the sockets.
2. Unscrew 4 M8x25-8.8-A2K Allen screws from motor A5.
3. Release motor A5 and pull it out together with connecting shaft A5, being careful not to tilt it.
4. Set down motor A5 together with connecting shaft A5.

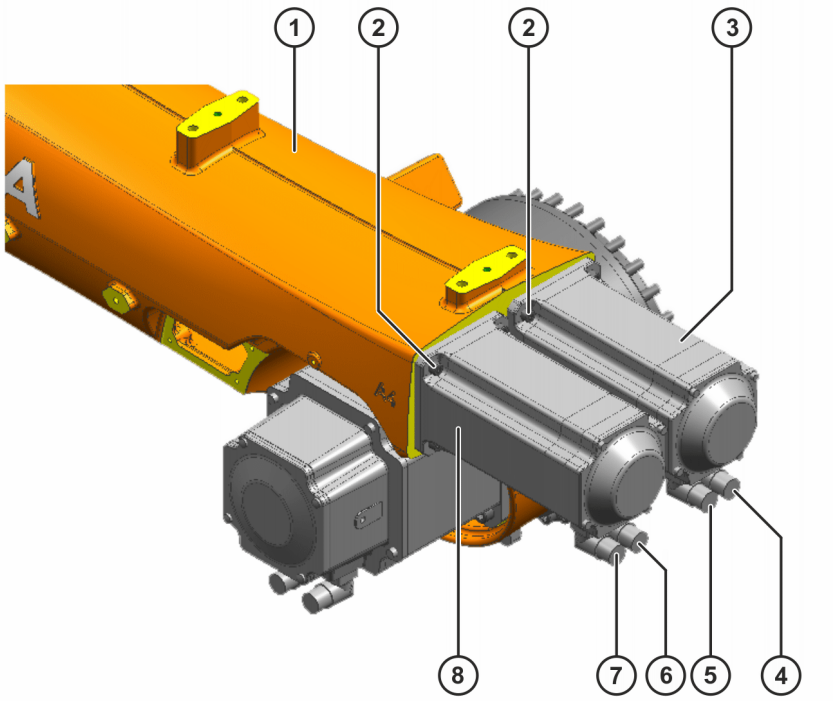

Fig. 9-28: Motors A4 and A5

1 Robot arm
2 M8x25-8.8-A2K Allen screw
3 Motor A5
4 Connector XM5
5 Connector XP5
6 Connector XM4
7 Connector XP4
8 Motor A4

5. Pull connecting shaft A5 off motor shaft.
6. Take compression spring and, if applicable, back-up ring off the motor shaft.

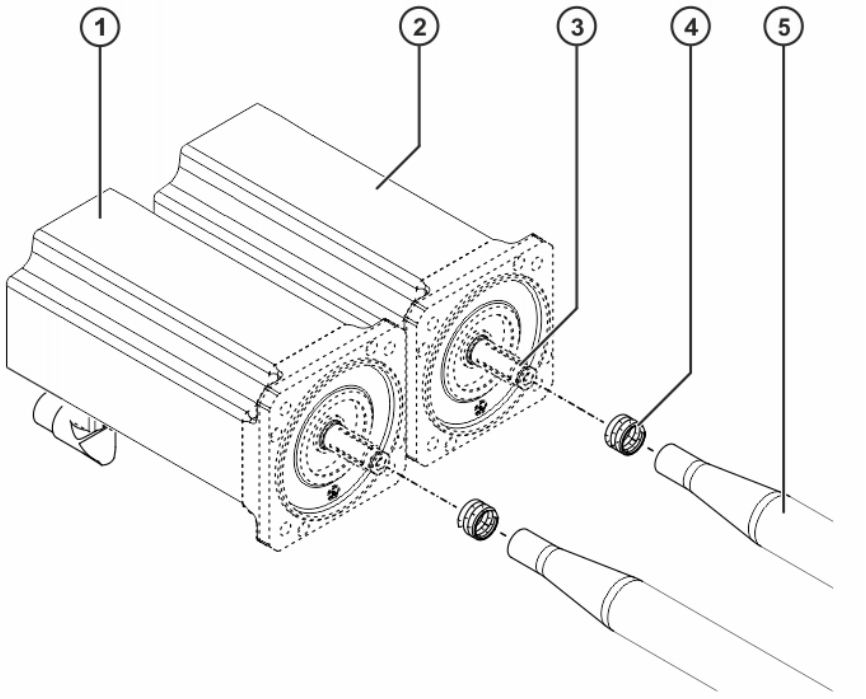

Fig. 9-29: Connecting shafts A4 and A5

1 Motor A5
2 Motor A4
3 Motor shaft with involute toothing
4 Compression spring
5 Connecting shaft A4

7. If the motor is not to be reinstalled, it must be disposed of properly or protected against corrosion before being put into storage.

9.6.3 Removing the in-line wrist

Procedure

1. Fasten the rope sling to the in-line wrist and to the crane.

WARNING

The in-line wrist and the arm may be damaged or persons injured if the in-line wrist is not safely secured. The in-line wrist weighs approx. 100 kg. The crane and rope must therefore be able to support this load safely.

2. Move the crane until the weight of the in-line wrist is supported by the crane.
3. Release and unplug motor connectors XM6 and XP6 from the plate.
4. Unscrew 4 M6x12-8.8-A2K Allen screws from the plate.
5. Release and unplug motor connectors XM6 and XP6 and, if applicable, purging air from the back of the plate.

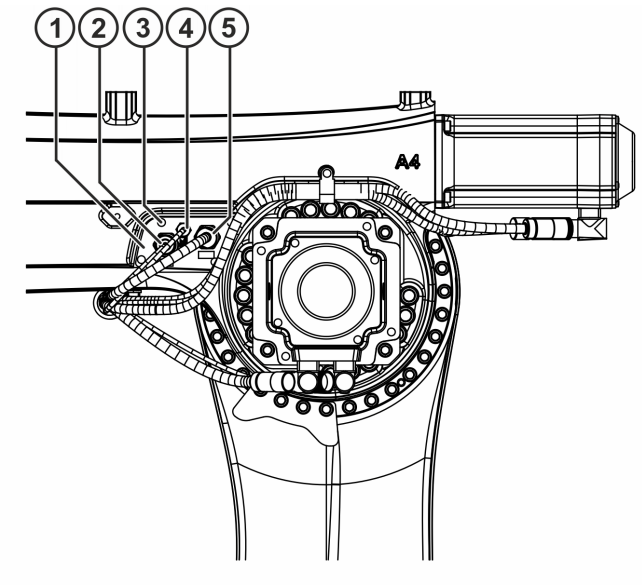

Fig. 9-30: In-line wrist connectors

1 Plate
2 Connector XP6
3 M6x12-8.8-A2K Allen screws
4 Purging air (for Foundry only)
5 Connector XM6

6. Unscrew 20 M10x200-10.9 Allen screws from the in-line wrist.
7. Carefully release the in-line wrist from the robot arm and pull it out using the crane.

   Do not tilt it when removing it. The gap between the robot arm and the in-line wrist must be uniform at all times around the entire circumference. Also move the crane at the same time as pulling out the in-line wrist.

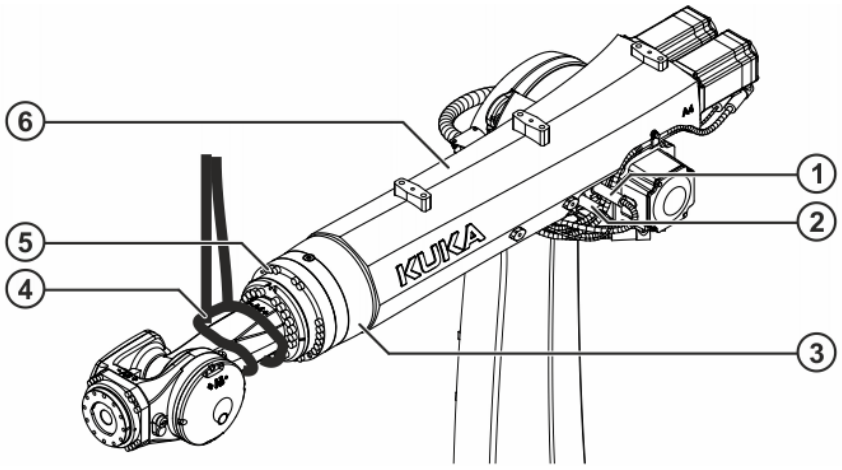

Fig. 9-31: In-line wrist

1 Connector XM6
2 Connector XP6
3 In-line wrist
4 Rope sling
5 M10x200-10.9 Allen screw

6 Robot arm

8. Place the in-line wrist on a suitable support surface and remove the rope sling.
9. If the in-line wrist is not to be reinstalled, it must be protected against corrosion before being put into storage.

9.6.4 Removing motor A6

Procedure

1. Unscrew and remove 4 M8x30-8.8-A2K Allen screws from motor A6.
2. Unfasten and remove motor A6.

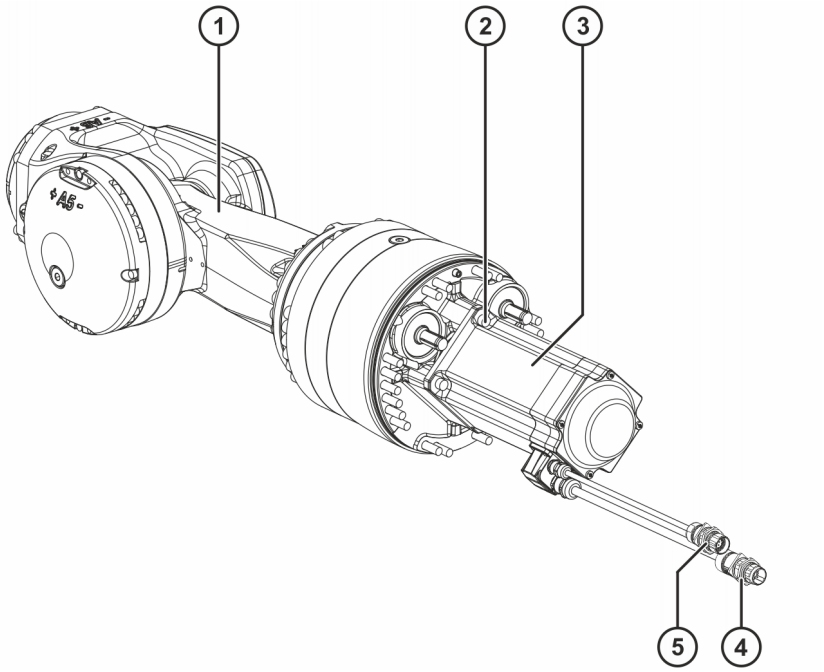

Fig. 9-32: In-line wrist with motor A6

1 In-line wrist
2 M8x30-8.8-A2K Allen screw
3 Motor A6
4 Connector XP6
5 Connector XM6

3. If the motor is not to be reinstalled, it must be disposed of properly or protected against corrosion before being put into storage.

9.6.5 Preparing a new motor for installation

Procedure

1. Clean the involute toothing of motor A6 and gear unit before installation and apply a thin but continuous coat of Microlube GL 261 grease.
2. Clean the mounting surface for the motor.
3. Check the condition of the compression spring and, if applicable, back-up ring on the motor shaft.

If there was a back-up ring on the motor shaft when the motor was removed, it must be disposed of and not reused on installing a new motor.

In the case of damage and/or wear, the compression spring must be exchanged.

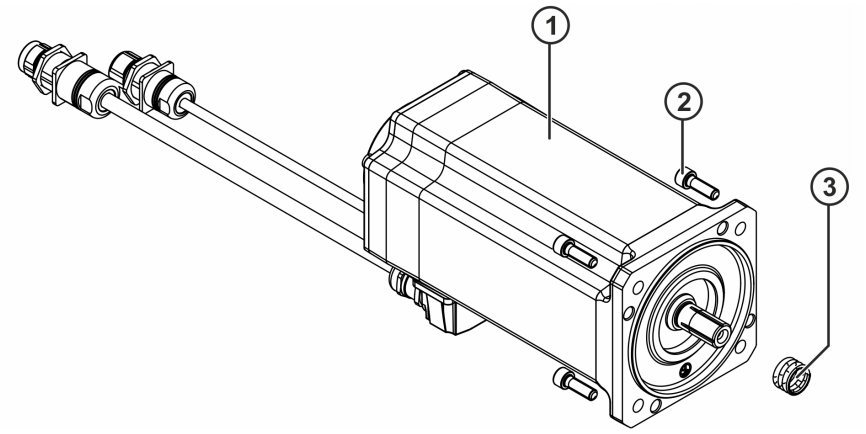

Fig. 9-33: Motor A6

1 Motor A6
2 M8x30-8.8 Allen screw
3 Compression spring

9.6.6 Installing motor A6

Procedure

1. Motor connectors XM6 and XP6 are positioned in such a way that they are located diagonally on the bottom left-hand side after the motor has been inserted.
2. Insert motor A6 into the in-line wrist; do not tilt during installation and ensure correct location (toothing).

i	Insertion of motor can be facilitated by turning it gently about its rotational axis.

3. Insert 4 M8x30-8.8-A2K Allen screws. Increase the tightening torque to the specified value in several stages.

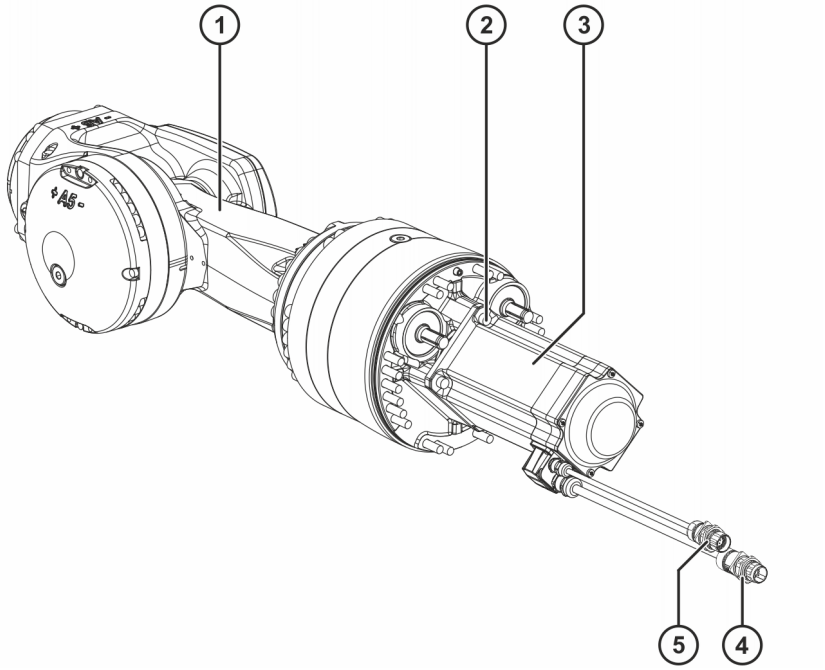

Fig. 9-34: In-line wrist with motor A6

1 In-line wrist
2 M8x30-8.8-A2K Allen screw
3 Motor A6
4 Connector XP6
5 Connector XM6

4. Mark the screws with screw locking varnish.

9.6.7 Installing the in-line wrist

Procedure

1. Fasten the rope sling to the in-line wrist.

WARNING

The in-line wrist and the arm may be damaged or persons injured if the in-line wrist is not safely secured. The in-line wrist weighs approx. 100 kg. The crane and rope must therefore be able to support this load safely.

2. Pick up the in-line wrist with the crane, bring it to the installation site and ensure that axes 4 and 5 are in their zero positions.
3. Insert the in-line wrist into the robot arm, introducing the motor cables into the robot arm in such a way that they are not wound around the connecting shafts.

   Do not tilt when inserting and move the crane simultaneously. The gap between the robot arm and the in-line wrist must be uniform at all times around the entire circumference.
4. Route motor connectors XM6 and XP6 through the aperture in the robot arm and connect them to the back of the plate.
5. Insert 20 new M10x200-10.9 Allen screws into the in-line wrist.

6. Tighten 20 M10x200-10.9 Allen screws alternately with the torque wrench. Increase the tightening torque to the specified value in several stages.
7. Remove the rope sling.

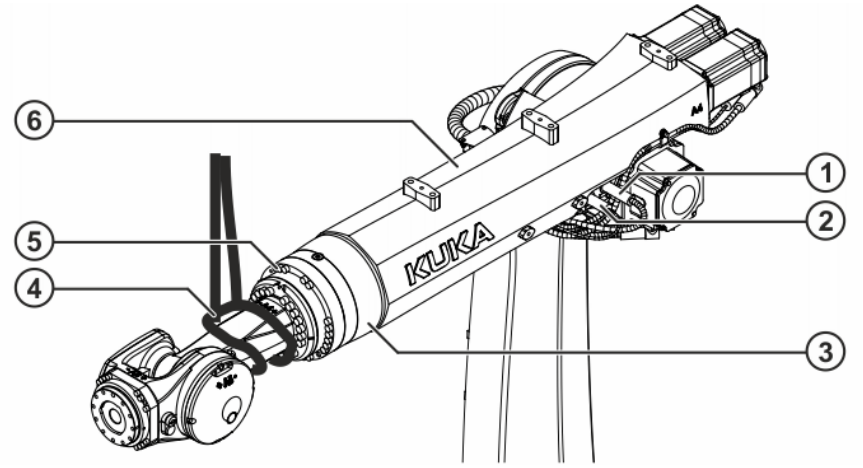

Fig. 9-35: In-line wrist

1 Connector XM6
2 Connector XP6
3 In-line wrist
4 Rope sling
5 M10x200-10.9 Allen screw
6 Robot arm

8. Fasten the plate to the robot arm with 4 M6x12-8.8-A2K Allen screws.
9. Connect connectors XM6 and XP6 and, if applicable, purging air to the front of the plate. The pins and coding elements of the connectors must be taken into consideration. When inserting the connectors, turn them until they clearly lock into the coding elements (twist-proof).

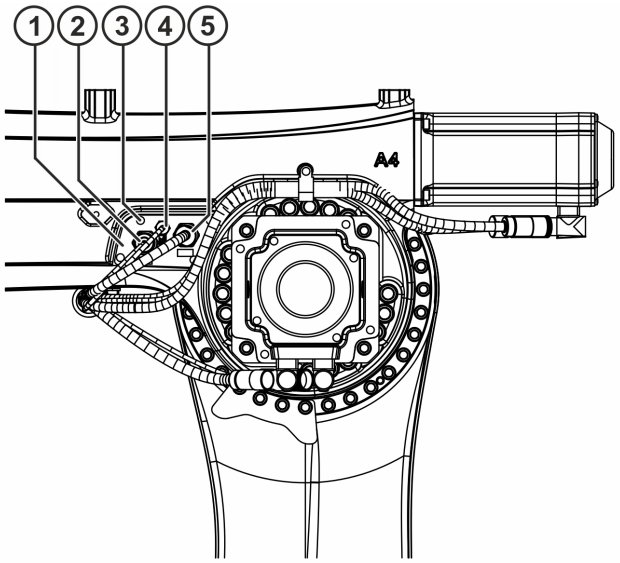

Fig. 9-36: In-line wrist connectors

1 Plate
2 Connector XP6

3 M6x12-8.8-A2K Allen screws
4 Purging air (for Foundry only)
5 Connector XM6

9.6.8 Installing motor A5

Description

The following work steps are identical for motor A4 and motor A5.

Procedure

1. If a new motor is to be installed, remove any corrosion protection it may have prior to installation.
2. Clean the toothing on connecting shaft A5 and motor shaft A5, and check for wear.
   In the case of damage and/or wear, connecting shaft A5 must be exchanged.
3. Apply a thin but continuous coat of Microlube GL 261 to the toothing on connecting shaft A5.
4. Mount compression spring on motor shaft A5.
   If there was a back-up ring on the motor shaft when the motor was removed, it must be disposed of and not reused on installing a new motor.
5. Push connecting shaft A5 onto motor shaft A5.

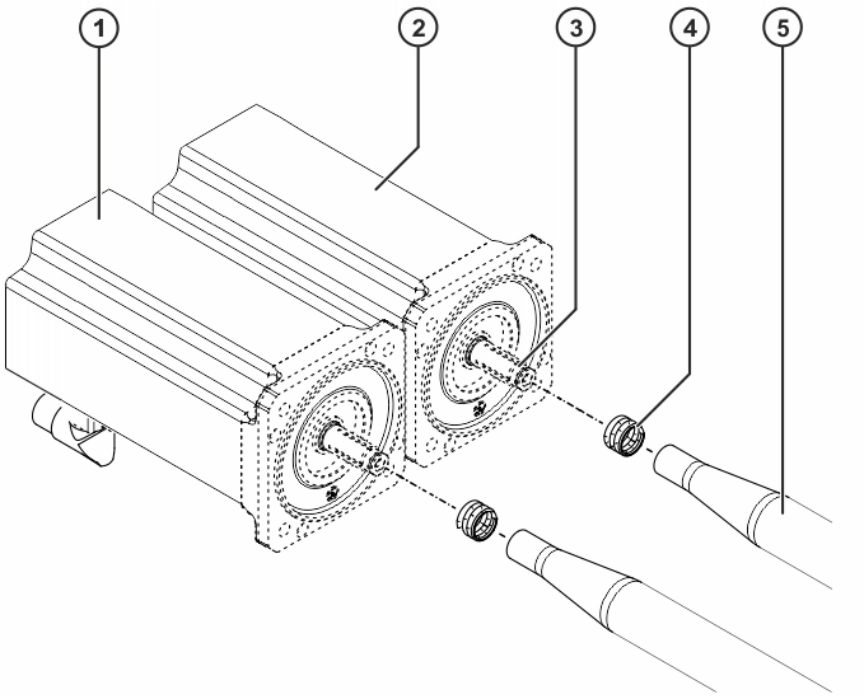

Fig. 9-37: Connecting shafts A4 and A5

1 Motor A5
2 Motor A4
3 Motor shaft with involute toothing
4 Compression spring
5 Connecting shaft A4

6. The mounting surfaces (motor A5 and robot arm) must be dry and free of dust.
7. Position sockets XM5 and XP5 so that they are located on the underside after motor A5 has been inserted into the robot arm.
8. Pick up motor A5 and insert it into the robot arm, being careful not to tilt it and ensuring that the connecting shafts (toothing) are correctly engaged in the in-line wrist.

> Insertion of motor can be facilitated by turning it gently about its rotational axis.

9. Insert 4 M8x25-8.8-A2K Allen screws.
10. Tighten 4 M8x25-8.8-A2K Allen screws with a torque wrench in diagonally opposite sequence. Increase the tightening torque to the specified value in several stages.
11. Plug connectors XM5 and XP5 into the sockets. The pins and coding elements of the connectors must be taken into consideration. When inserting the connectors, turn them until they clearly lock into the coding elements (twist-proof).

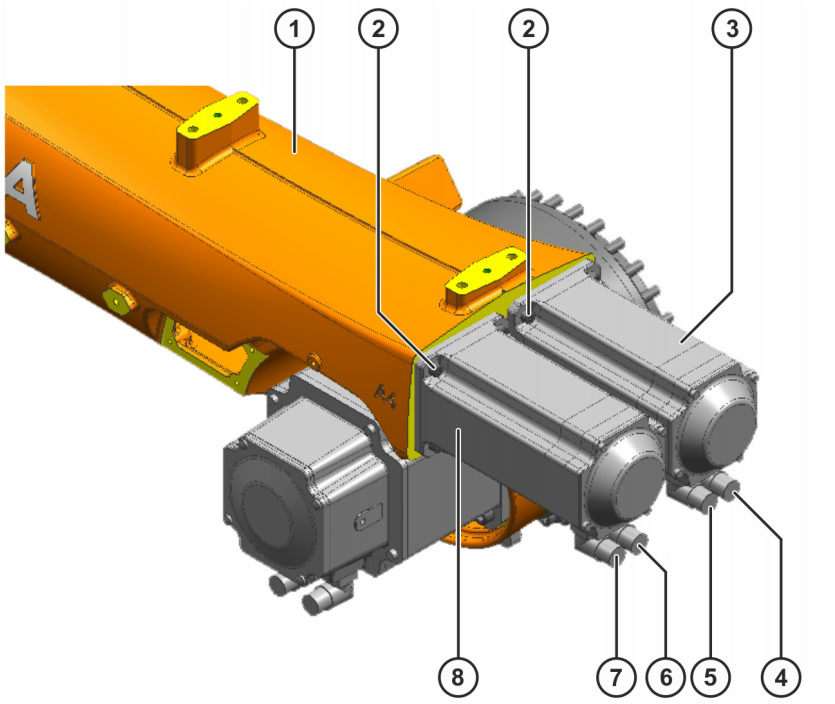

Fig. 9-38: Motors A4 and A5

1 Robot arm
2 M8x25-8.8-A2K Allen screw
3 Motor A5
4 Connector XM5
5 Connector XP5
6 Connector XM4
7 Connector XP4
8 Motor A4

9.6.9 Installing motor A4

Description

The following work steps are identical for motor A4 and motor A5.

Procedure

1. If a new motor is to be installed, remove any corrosion protection it may have prior to installation.
2. Clean the toothing on connecting shaft A4 and motor shaft A4, and check for wear.

   In the case of damage and/or wear, connecting shaft A4 must be exchanged.
3. Apply a thin but continuous coat of Microlube GL 261 to the toothing on connecting shaft A4.
4. Mount compression spring on motor shaft A5.

   If there was a back-up ring on the motor shaft when the motor was removed, it must be disposed of and not reused on installing a new motor.
5. Push connecting shaft A4 onto motor shaft A4.

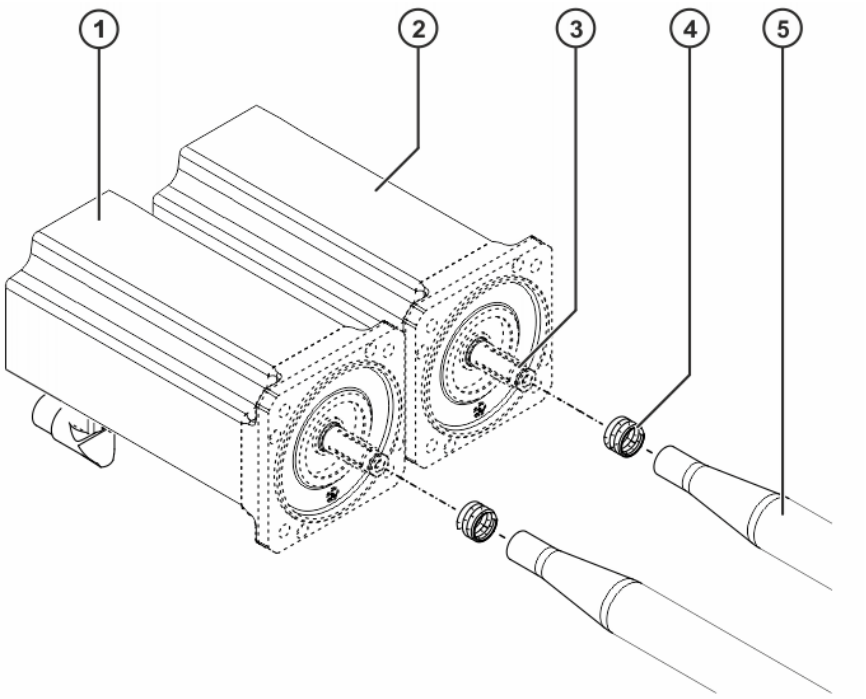

Fig. 9-39: Connecting shafts A4 and A5

1 Motor A5
2 Motor A4
3 Motor shaft with involute toothing
4 Compression spring
5 Connecting shaft A4

6. The mounting surfaces (motor A4 and robot arm) must be dry and free of dust.
7. Position sockets XM4 and XP4 so that they are located on the underside after motor A4 has been inserted into the robot arm.

8. Pick up motor A4 and insert it into the robot arm, being careful not to tilt it and ensuring that the connecting shafts (toothing) are correctly engaged in the in-line wrist.

> Insertion of motor can be facilitated by turning it gently about its rotational axis.

9. Insert 4 M8x25-8.8-A2K Allen screws.
10. Tighten 4 M8x25-8.8-A2K Allen screws with a torque wrench in diagonally opposite sequence. Increase the tightening torque to the specified value in several stages.
11. Plug connectors XM4 and XP4 into the sockets. The pins and coding elements of the connectors must be taken into consideration. When inserting the connectors, turn them until they clearly lock into the coding elements (twist-proof).

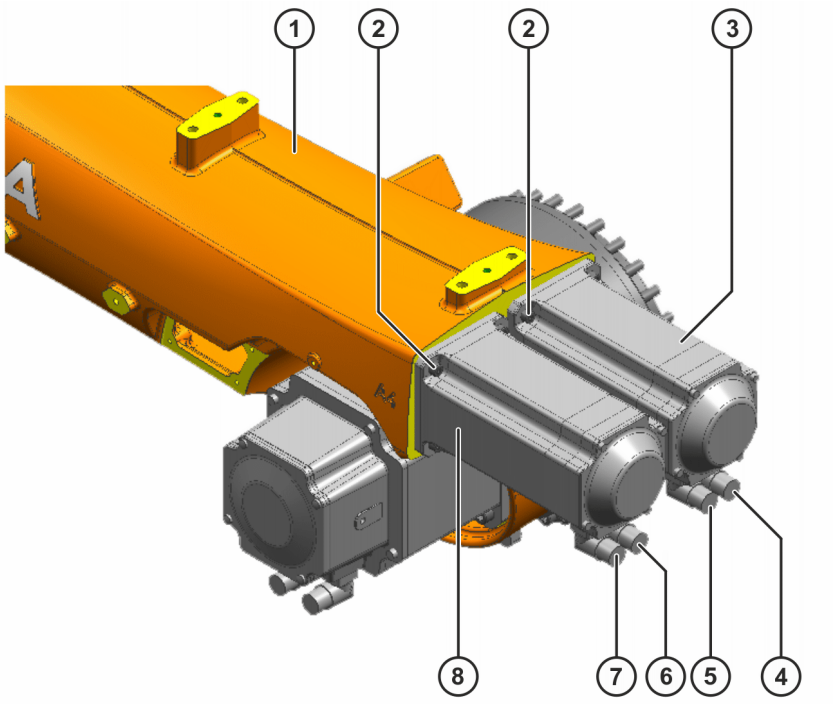

Fig. 9-40: Motors A4 and A5

1 Robot arm
2 M8x25-8.8-A2K Allen screw
3 Motor A5
4 Connector XM5
5 Connector XP5
6 Connector XM4
7 Connector XP4
8 Motor A4

9.6.10 Concluding work

The following concluding work must be carried out:

- Move A4, A5 and A6 of the robot and look out for irregularities.
- Carry out mastering of A4, A5 and A6.

Detailed information about mastering can be found in the system software documentation.

- Test the program in Manual Reduced Velocity mode (T1).

9.7 Exchanging the in-line wrist

Description

The following describes the exchange of the in-line wrist. All of the in-line wrist variants are installed in the same way, irrespective of the payload or arm length.

Equipment

The following equipment is required:

Designation	Article number
Set of Allen keys 1.5; 2; 2.5; 3; 4; 5; 6; 8; 10 mm	-
Torque wrench min. 20 Nm to 100 Nm	-
Socket wrench set	-
Crane with sufficient load-bearing capacity	-
Rope sling with sufficient load-bearing capacity	-
Brush	-
SEMD/MEMD mastering kit	0000-228-936

Material

The specified spare parts packages (SPP) differ in color, but are functionally identical. The code "KUKAO" corresponds to KUKA orange 2567; the SPP without a color code corresponds to the current standard color KUKA Industrial Orange (RAL 2009). The color of the robot can be found in the shipping documents.

The following material is required:

Robot	Designation	Article number	Quantity
• KR 120 R3500-2 P • KR 120 R3500-2 P-C • KR 210 R3300-2 K • KR 270 R3100-2 K	SPP IW300 Quantec-2 Std -C -K IndOr	0000-388-559	1
	SPP IW 300 Quantec-2 Std -C -K KUKAO	0000-336-010	
• KR 120 R3900-2 K	SPP IW120 WE 400 Quantec-2 -K	0000-388-548	1
	SPP IW120 WE 400 Quantec-2 -K KUKAO	0000-378-455	
• KR 180 R3500-2 K	SPP IW 210 Quantec-2 Std -C -K	0000-388-560	1
	SPP IW 210 Quantec-2 Std -C -K KUKAO	0000-334-481	
• KR 180 R3500-2 K-F	SPP IW 210 F	0000-388-561	1
	SPP IW 210 F KUKAO	0000-362-268	

Robot	Designation	Article number	Quantity
• KR 210 R3300-2 K-F • KR 270 R3100-2 K-F	SPP IW 300 F	0000-388-562	1
	SPP IW 300 F KUKAO	0000-362-269	

Procurement of spare parts

Defective components must only be replaced with original spare parts from KUKA Deutschland GmbH. Non-compliance nullifies warranty and liability claims.

A “Repair Card” is supplied with the exchange parts. This must be completed and returned to KUKA Deutschland GmbH together with the defective component in the following cases.

- Within the warranty period
- If, after consultation with KUKA Deutschland GmbH, an examination of the defective component by KUKA is required.

Tightening torques

The tightening torques can be found under: (>>> *12.1 "Tightening torques" Page 385*)

These are valid for screws and nuts where no other specifications are given.

Screws of strength class 10.9 and higher, stainless steel screws of strength class 70 or 80, as well as screws with test certification may only be tightened once with the rated tightening torque. These screws must be replaced with new ones when they are slackened for the first time.

Preconditions

- The controller is switched off and secured to prevent unauthorized persons from switching it on again.
- The arm is in the horizontal position.
- Axes 4, 5 and 6 should, if possible, be in their zero positions.
- Payload (tool or device) has been removed from the in-line wrist.

Work safety

CAUTION

Risk of burns on hot surfaces

The surfaces of the motors are often hot immediately after the robot has been decommissioned. Touching them may result in burns.

- Wear protective gloves.

WARNING

Danger to life and limb due to live parts

When work is performed on this system, live parts can lead to unintentional motions of the robot, positioner or other components. Failure to observe this may result in physical injuries and damage to property.

- If work is carried out on an operable system, the main switch on the control cabinet must be turned to the OFF position and secured with a padlock to prevent unauthorized persons from switching it on again.
- Inform the persons involved by means of a sign (e.g. affix a warning sign).
- Warn all persons concerned before putting the system back into operation.

WARNING

Danger to life and limb when working on live parts

Before commencing work on live parts of the robot system and/or on electrical systems, measures must be taken to ensure that the 5 safety rules are followed. It is essential that the 5 safety steps are followed in the correct order. Death, severe injuries or damage to property may result.

1. De-energize
2. Secure against unintentional restart
3. Ensure that the system is de-energized
4. Ground and short-circuit the system
5. Cover or erect barriers around neighboring energized parts

Once the work is completed, tools and equipment must be removed and the measures rescinded in reverse sequence.

DANGER

Danger to life and limb due to defective or unsuitable load suspension devices

If defective or non-approved load suspension devices are used, the load may fall off or start to swing. Failure to observe this can lead to death, injury or property damage.

- Before using load suspension devices, check for defects (e.g. damage, corrosion, deformation, wear, cracks) and exchange components if necessary.
- Use only inspected and approved load suspension devices.
- Use only load suspension devices with a sufficient load-bearing capacity.

WARNING

Risk of crushing during removal and installation of motor

When removing or installing the motor, there is a risk of injury by crushing. This could result in hand injuries.

- Wear protective gloves.

NOTICE

Wear and premature failure due to damage to toothing

Damage to the toothing of the motor and gear unit can lead to increased wear and premature failure of the components.

- During cleaning, ensure that the toothing is not damaged.
- Before installation, check the toothing of the motor and gear unit for damage.

To ensure safe use of our products, we recommend regularly requesting up-to-date safety data sheets from the manufacturers of auxiliary and operating materials.

9.7.1 Removing motor A4

Description

The following work steps are identical for motor A4 and motor A5.

Procedure

1. Release and unplug connectors XM4 and XP4 at the sockets.
2. Unscrew 4 M8x25-8.8-A2K Allen screws from motor A4.
3. Release motor A4 and pull it out together with connecting shaft A4, being careful not to tilt it.
4. Set down motor A4 together with connecting shaft A4.

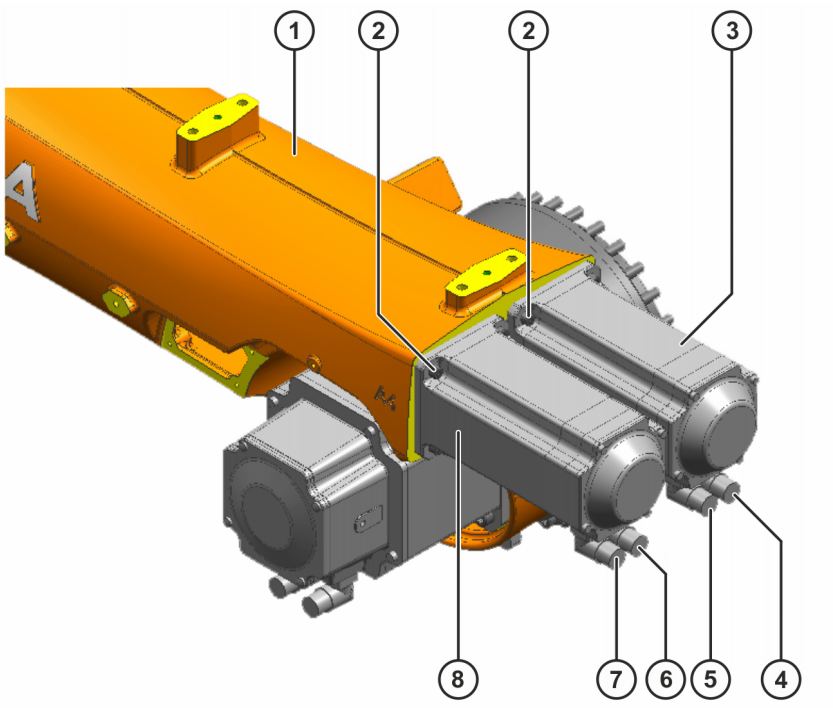

Fig. 9-41: Motors A4 and A5

1 Robot arm
2 M8x25-8.8-A2K Allen screw
3 Motor A5
4 Connector XM5
5 Connector XP5

6 Connector XM4
7 Connector XP4
8 Motor A4

5. Pull connecting shaft A4 off motor shaft.
6. Take compression spring and, if applicable, back-up ring off the motor shaft.

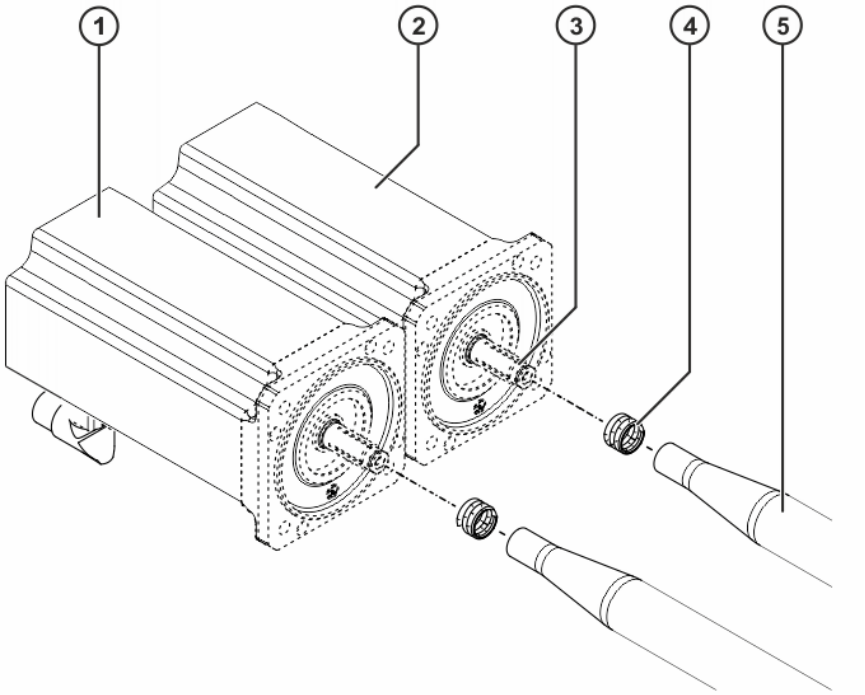

Fig. 9-42: Connecting shafts A4 and A5

1 Motor A5
2 Motor A4
3 Motor shaft with involute toothing
4 Compression spring
5 Connecting shaft A4

7. If the motor is not to be reinstalled, it must be disposed of properly or protected against corrosion before being put into storage.

9.7.2 Removing motor A5

Description

The following work steps are identical for motor A4 and motor A5.

Procedure

1. Release and unplug connectors XM5 and XP5 at the sockets.
2. Unscrew 4 M8x25-8.8-A2K Allen screws from motor A5.
3. Release motor A5 and pull it out together with connecting shaft A5, being careful not to tilt it.
4. Set down motor A5 together with connecting shaft A5.

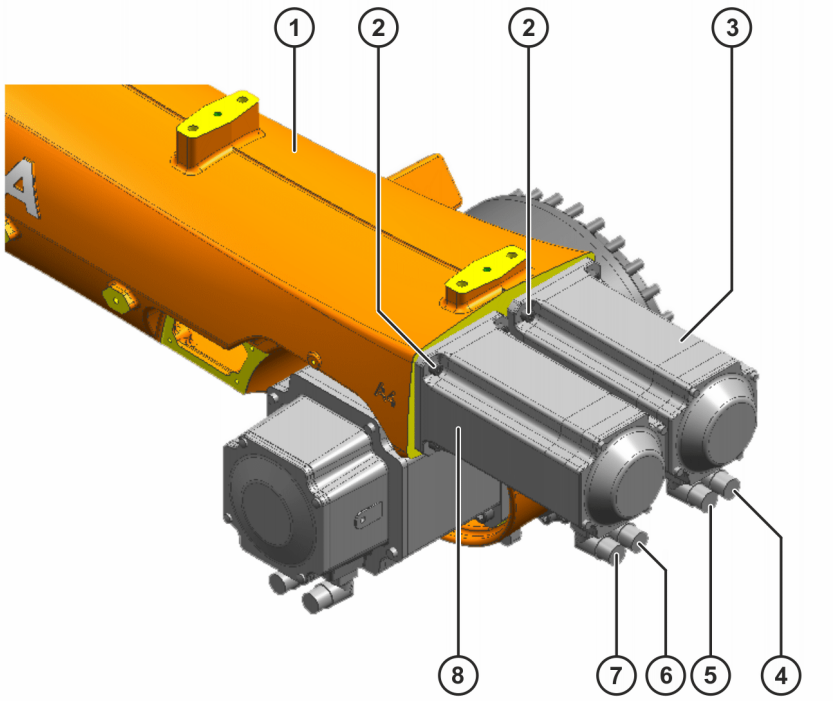

Fig. 9-43: Motors A4 and A5

1 Robot arm
2 M8x25-8.8-A2K Allen screw
3 Motor A5
4 Connector XM5
5 Connector XP5
6 Connector XM4
7 Connector XP4
8 Motor A4

5. Pull connecting shaft A5 off motor shaft.
6. Take compression spring and, if applicable, back-up ring off the motor shaft.

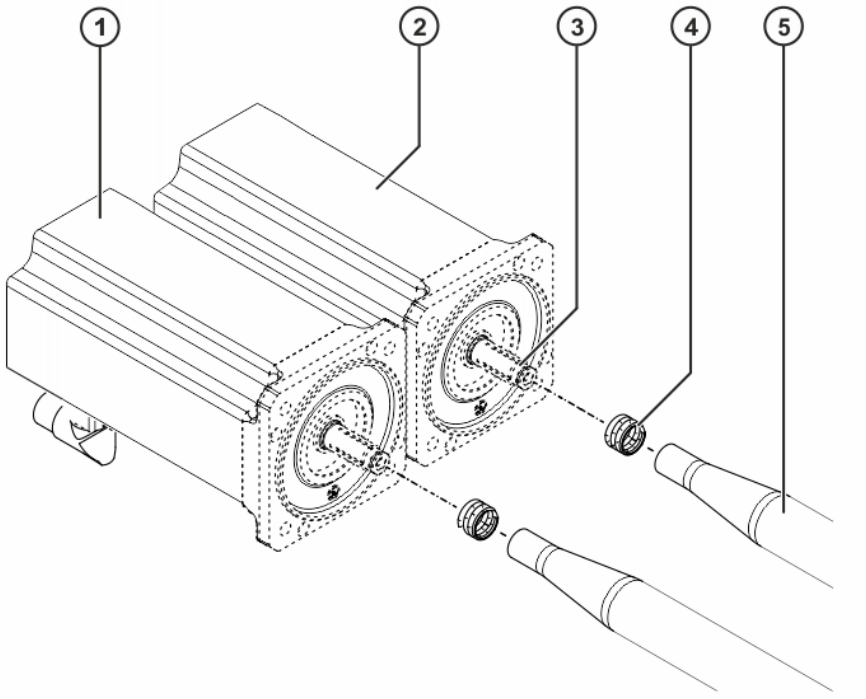

Fig. 9-44: Connecting shafts A4 and A5

1 Motor A5
2 Motor A4
3 Motor shaft with involute toothing
4 Compression spring
5 Connecting shaft A4

7. If the motor is not to be reinstalled, it must be disposed of properly or protected against corrosion before being put into storage.

9.7.3 Removing the in-line wrist

Procedure

1. Fasten the rope sling to the in-line wrist and to the crane.

WARNING

The in-line wrist and the arm may be damaged or persons injured if the in-line wrist is not safely secured. The in-line wrist weighs approx. 100 kg. The crane and rope must therefore be able to support this load safely.

2. Move the crane until the weight of the in-line wrist is supported by the crane.
3. Release and unplug motor connectors XM6 and XP6 from the plate.
4. Unscrew 4 M6x12-8.8-A2K Allen screws from the plate.
5. Release and unplug motor connectors XM6 and XP6 and, if applicable, purging air from the back of the plate.

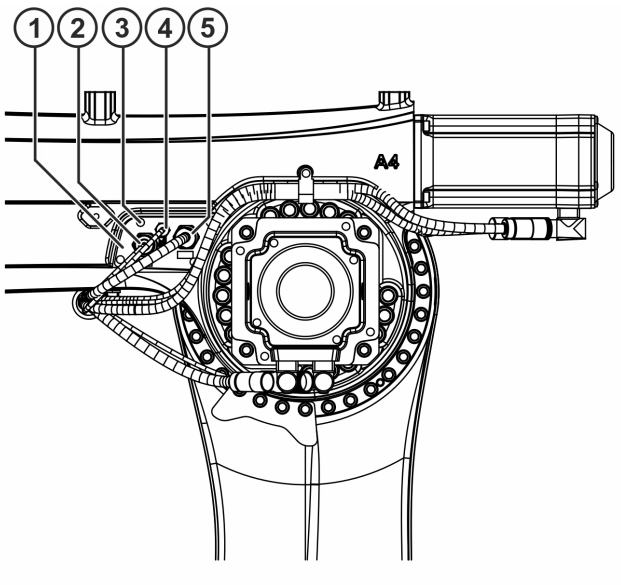

Fig. 9-45: In-line wrist connectors

1 Plate
2 Connector XP6
3 M6x12-8.8-A2K Allen screws
4 Purging air (for Foundry only)
5 Connector XM6

6. Unscrew 20 M10x200-10.9 Allen screws from the in-line wrist.
7. Carefully release the in-line wrist from the robot arm and pull it out using the crane.

   Do not tilt it when removing it. The gap between the robot arm and the in-line wrist must be uniform at all times around the entire circumference. Also move the crane at the same time as pulling out the in-line wrist.

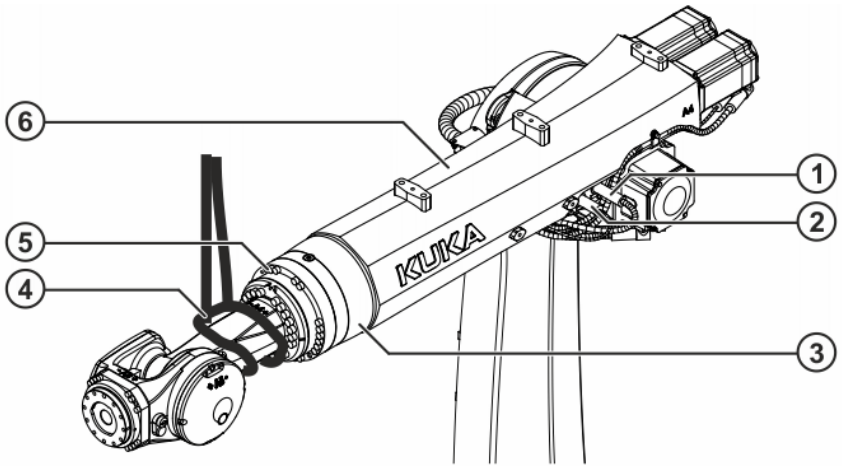

Fig. 9-46: In-line wrist

1 Connector XM6
2 Connector XP6
3 In-line wrist
4 Rope sling
5 M10x200-10.9 Allen screw

6 Robot arm

8. Place the in-line wrist on a suitable support surface and remove the rope sling.
9. If the in-line wrist is not to be reinstalled, it must be protected against corrosion before being put into storage.

9.7.4 Removing motor A6

Procedure

1. Unscrew and remove 4 M8x30-8.8-A2K Allen screws from motor A6.
2. Unfasten and remove motor A6.

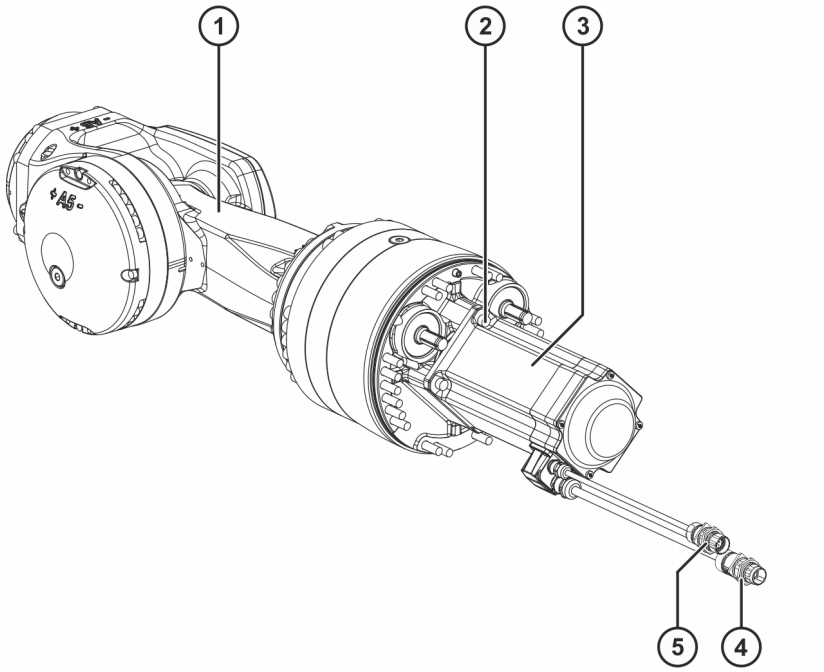

Fig. 9-47: In-line wrist with motor A6

1 In-line wrist
2 M8x30-8.8-A2K Allen screw
3 Motor A6
4 Connector XP6
5 Connector XM6

3. If the motor is not to be reinstalled, it must be disposed of properly or protected against corrosion before being put into storage.

9.7.5 Preparing the new in-line wrist

Procedure

1. Remove all protective coatings and oil from new in-line wrist, if applicable.
2. Clean all toothing before installation and apply a thin but continuous coat of Microlube GL 261 grease.

NOTICE

When installing the in-line wrist, it must be ensured that the toothing of the in-line wrist and connecting shafts is not damaged. Increased wear and premature failure may result.

9.7.6 Installing motor A6

Procedure

1. Motor connectors XM6 and XP6 are positioned in such a way that they are located diagonally on the bottom left-hand side after the motor has been inserted.
2. Insert motor A6 into the in-line wrist; do not tilt during installation and ensure correct location (toothing).

Insertion of motor can be facilitated by turning it gently about its rotational axis.

3. Insert 4 M8x30-8.8-A2K Allen screws. Increase the tightening torque to the specified value in several stages.

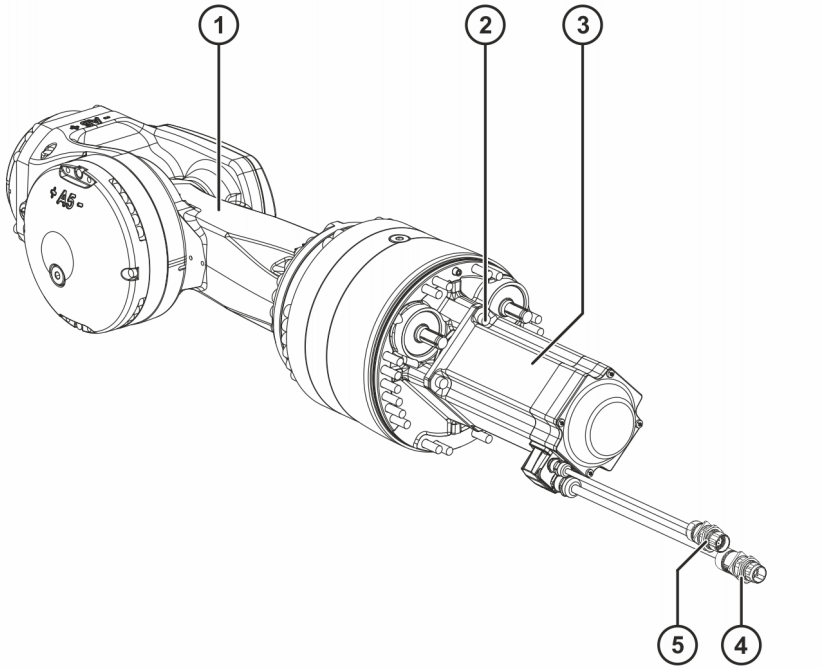

Fig. 9-48: In-line wrist with motor A6

1 In-line wrist
2 M8x30-8.8-A2K Allen screw
3 Motor A6
4 Connector XP6
5 Connector XM6

4. Mark the screws with screw locking varnish.

9.7.7 Installing the in-line wrist

Procedure

1. Fasten the rope sling to the in-line wrist.



WARNING

The in-line wrist and the arm may be damaged or persons injured if the in-line wrist is not safely secured. The in-line wrist weighs approx. 100 kg. The crane and rope must therefore be able to support this load safely.

2. Pick up the in-line wrist with the crane, bring it to the installation site and ensure that axes 4 and 5 are in their zero positions.
3. Insert the in-line wrist into the robot arm, introducing the motor cables into the robot arm in such a way that they are not wound around the connecting shafts.

   Do not tilt when inserting and move the crane simultaneously. The gap between the robot arm and the in-line wrist must be uniform at all times around the entire circumference.
4. Route motor connectors XM6 and XP6 through the aperture in the robot arm and connect them to the back of the plate.
5. Insert 20 new M10x200-10.9 Allen screws into the in-line wrist.
6. Tighten 20 M10x200-10.9 Allen screws alternately with the torque wrench. Increase the tightening torque to the specified value in several stages.
7. Remove the rope sling.

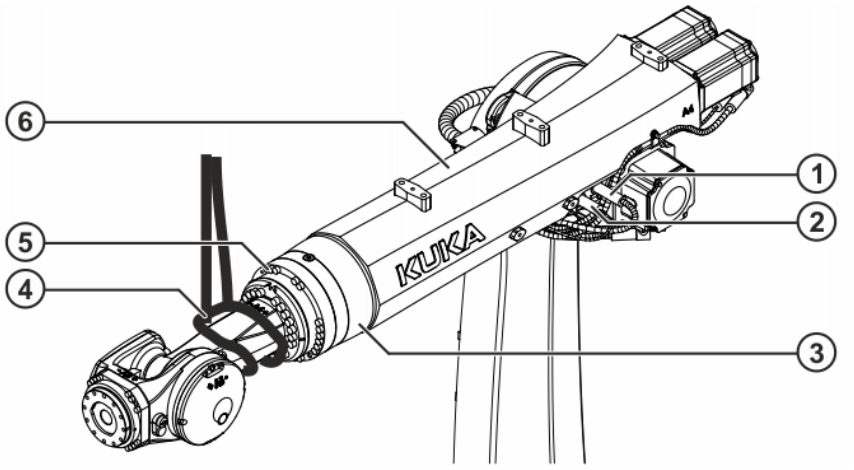

Fig. 9-49: In-line wrist

1 Connector XM6
2 Connector XP6
3 In-line wrist
4 Rope sling
5 M10x200-10.9 Allen screw
6 Robot arm

8. Fasten the plate to the robot arm with 4 M6x12-8.8-A2K Allen screws.
9. Connect connectors XM6 and XP6 and, if applicable, purging air to the front of the plate. The pins and coding elements of the connectors

must be taken into consideration. When inserting the connectors, turn them until they clearly lock into the coding elements (twist-proof).

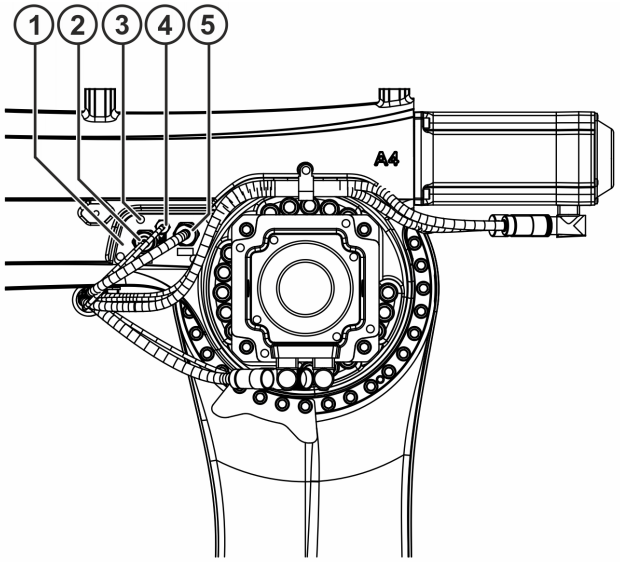

Fig. 9-50: In-line wrist connectors

1 Plate
2 Connector XP6
3 M6x12-8.8-A2K Allen screws
4 Purging air (for Foundry only)
5 Connector XM6

9.7.8 Installing motor A5

Description

The following work steps are identical for motor A4 and motor A5.

Procedure

1. If a new motor is to be installed, remove any corrosion protection it may have prior to installation.
2. Clean the toothing on connecting shaft A5 and motor shaft A5, and check for wear.

   In the case of damage and/or wear, connecting shaft A5 must be exchanged.
3. Apply a thin but continuous coat of Microlube GL 261 to the toothing on connecting shaft A5.
4. Mount compression spring on motor shaft A5.

   If there was a back-up ring on the motor shaft when the motor was removed, it must be disposed of and not reused on installing a new motor.
5. Push connecting shaft A5 onto motor shaft A5.

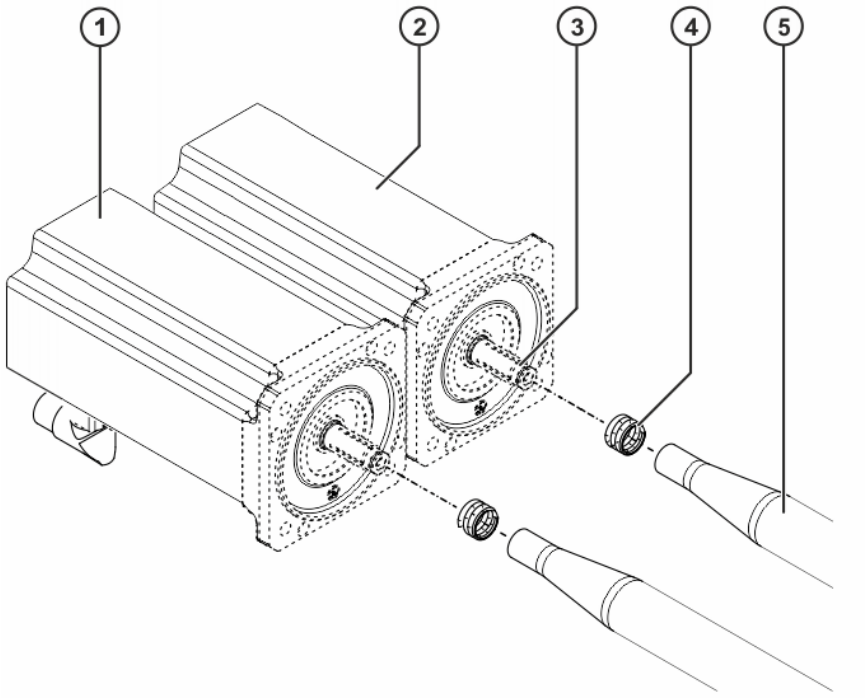

Fig. 9-51: Connecting shafts A4 and A5

1 Motor A5
2 Motor A4
3 Motor shaft with involute toothing
4 Compression spring
5 Connecting shaft A4

6. The mounting surfaces (motor A5 and robot arm) must be dry and free of dust.
7. Position sockets XM5 and XP5 so that they are located on the underside after motor A5 has been inserted into the robot arm.
8. Pick up motor A5 and insert it into the robot arm, being careful not to tilt it and ensuring that the connecting shafts (toothing) are correctly engaged in the in-line wrist.

Insertion of motor can be facilitated by turning it gently about its rotational axis.

9. Insert 4 M8x25-8.8-A2K Allen screws.
10. Tighten 4 M8x25-8.8-A2K Allen screws with a torque wrench in diagonally opposite sequence. Increase the tightening torque to the specified value in several stages.
11. Plug connectors XM5 and XP5 into the sockets. The pins and coding elements of the connectors must be taken into consideration. When inserting the connectors, turn them until they clearly lock into the coding elements (twist-proof).

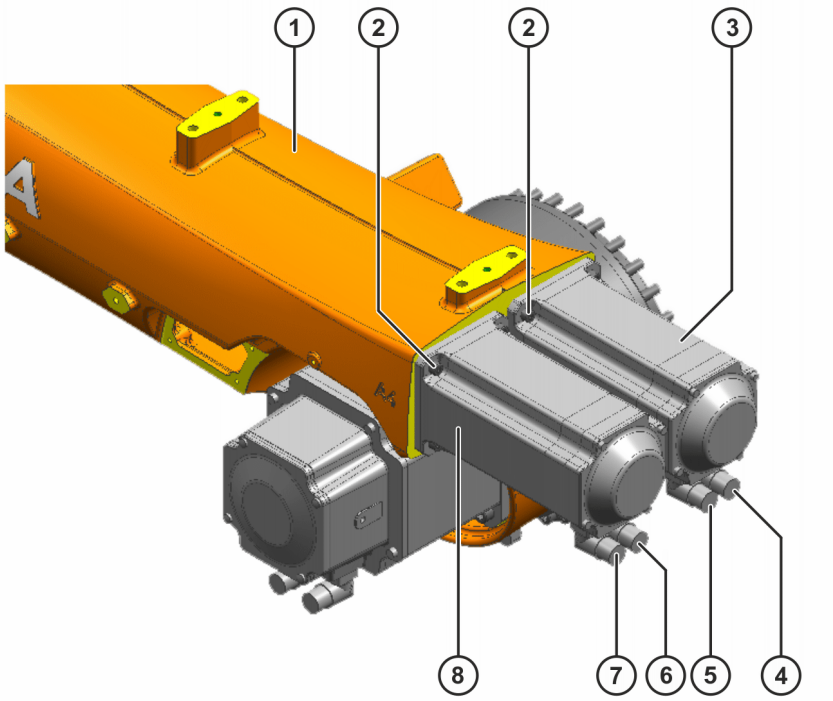

Fig. 9-52: Motors A4 and A5

1 Robot arm
2 M8x25-8.8-A2K Allen screw
3 Motor A5
4 Connector XM5
5 Connector XP5
6 Connector XM4
7 Connector XP4
8 Motor A4

9.7.9 Installing motor A4

Description

The following work steps are identical for motor A4 and motor A5.

Procedure

1. If a new motor is to be installed, remove any corrosion protection it may have prior to installation.
2. Clean the toothing on connecting shaft A4 and motor shaft A4, and check for wear.
   In the case of damage and/or wear, connecting shaft A4 must be exchanged.
3. Apply a thin but continuous coat of Microlube GL 261 to the toothing on connecting shaft A4.
4. Mount compression spring on motor shaft A5.
   If there was a back-up ring on the motor shaft when the motor was removed, it must be disposed of and not reused on installing a new motor.
5. Push connecting shaft A4 onto motor shaft A4.

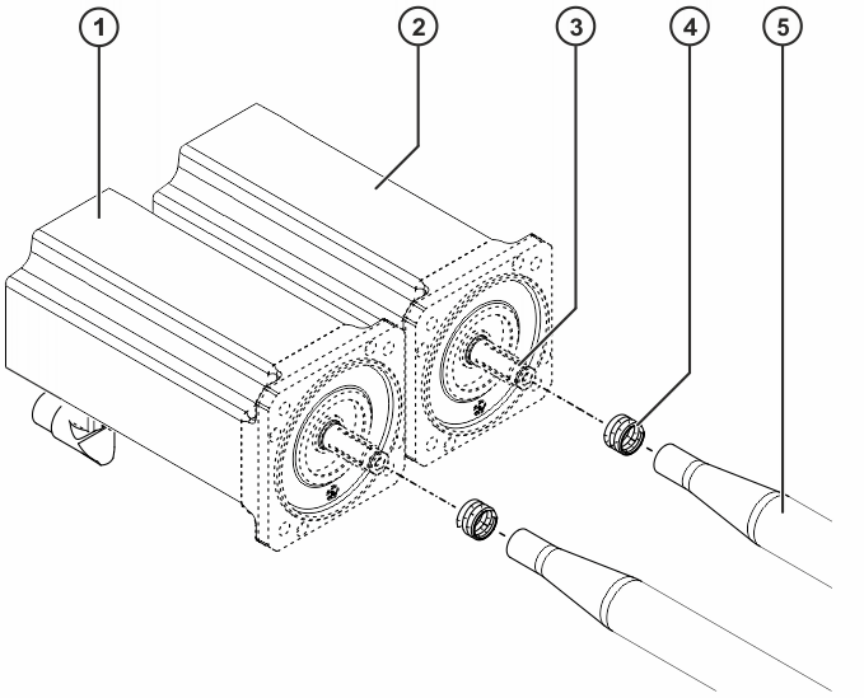

Fig. 9-53: Connecting shafts A4 and A5

1 Motor A5
2 Motor A4
3 Motor shaft with involute toothing
4 Compression spring
5 Connecting shaft A4

6. The mounting surfaces (motor A4 and robot arm) must be dry and free of dust.
7. Position sockets XM4 and XP4 so that they are located on the underside after motor A4 has been inserted into the robot arm.
8. Pick up motor A4 and insert it into the robot arm, being careful not to tilt it and ensuring that the connecting shafts (toothing) are correctly engaged in the in-line wrist.

Insertion of motor can be facilitated by turning it gently about its rotational axis.

9. Insert 4 M8x25-8.8-A2K Allen screws.
10. Tighten 4 M8x25-8.8-A2K Allen screws with a torque wrench in diagonally opposite sequence. Increase the tightening torque to the specified value in several stages.
11. Plug connectors XM4 and XP4 into the sockets. The pins and coding elements of the connectors must be taken into consideration. When inserting the connectors, turn them until they clearly lock into the coding elements (twist-proof).

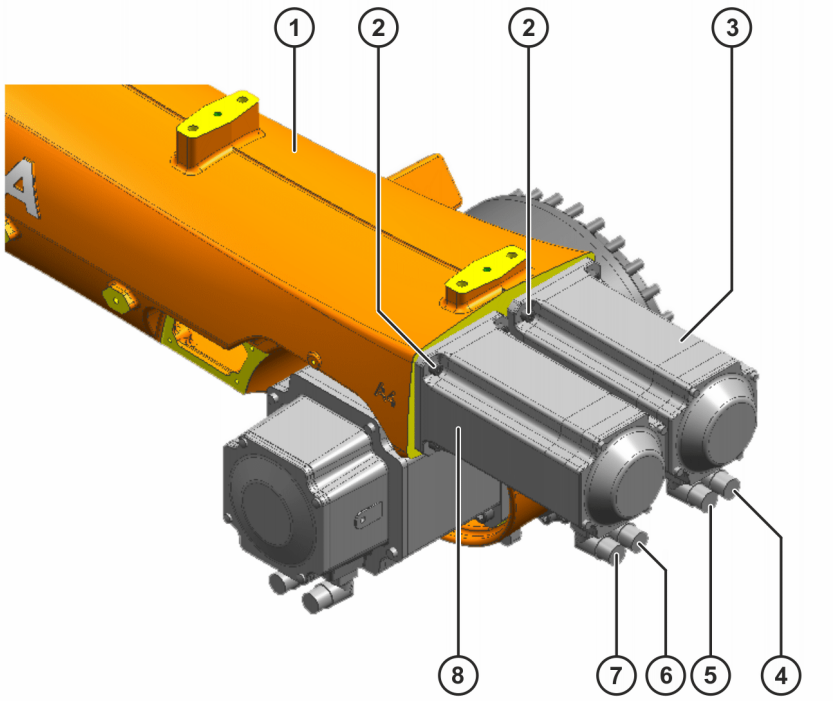

Fig. 9-54: Motors A4 and A5

1 Robot arm
2 M8x25-8.8-A2K Allen screw
3 Motor A5
4 Connector XM5
5 Connector XP5
6 Connector XM4
7 Connector XP4
8 Motor A4

9.7.10 Concluding work

The following concluding work must be carried out:

- Adapt the MAMES values.

If using KSS 8.3, the plug-in **KUKA.WristMamesOffset** is required for this.

- Move A4, A5 and A6 of the robot and look out for irregularities.
- Carry out mastering of A4, A5 and A6.

Detailed information about mastering can be found in the system software documentation.

- Test the program in Manual Reduced Velocity (T1) mode.

9.8 Exchanging the connecting shafts

Description

The following instructions describe the procedure for exchanging connecting shafts A4 and A5. The connecting shafts must always be exchanged

as a pair. This description applies to floor-mounted robots. If the robot is installed in an inclined or suspended position, the procedure is to be applied analogously.

Equipment

The following equipment is required:

Designation	Article number
Set of Allen keys 1.5; 2; 2.5; 3; 4; 5; 6; 8; 10 mm	-
Torque wrench min. 5 Nm to 50 Nm	-
Socket wrench set	-
Brush	-
SEMD/MEMD mastering kit	0000-228-936

Material

The following material is required:

Designation	Article number	Quantity
SPP shaft Quantec-2 970 COS For the following machines: • KR 120 R3500-2 P • KR 120 R3500-2 P-C • KR 120 R3900-2 K • KR 180 R3500-2 K • KR 180 R3500-2 K-F	0000-336-055	1
SPP shaft Quantec-2 770 COS For the following machines: • KR 210 R3300-2 K • KR 210 R3300-2 K-F • KR 270 R3100-2 K • KR 270 R3100-2 K-F	0000-334-487	1

Procurement of spare parts

Defective components must only be replaced with original spare parts from KUKA Deutschland GmbH. Non-compliance nullifies warranty and liability claims.

A “Repair Card” is supplied with the exchange parts. This must be completed and returned to KUKA Deutschland GmbH together with the defective component in the following cases.

- Within the warranty period
- If, after consultation with KUKA Deutschland GmbH, an examination of the defective component by KUKA is required.

Tightening torques

The tightening torques can be found under: (>>> *12.1 "Tightening torques" Page 385*)

These are valid for screws and nuts where no other specifications are given.

Screws of strength class 10.9 and higher, stainless steel screws of strength class 70 or 80, as well as screws with test certification may only be tightened once with the rated tightening torque. These screws must be replaced with new ones when they are slackened for the first time.

Precondition

- The robot must be prevented from tipping. If necessary, fasten the robot to the mounting base.
- The robot is secured against axis motions.
- There is no hazard posed by other system components.
- Tools have been removed.

Work safety

CAUTION

Risk of burns on hot surfaces

The surfaces of the motors are often hot immediately after the robot has been decommissioned. Touching them may result in burns.

- Wear protective gloves.

WARNING

Danger to life and limb due to live parts

When work is performed on this system, live parts can lead to unintentional motions of the robot, positioner or other components. Failure to observe this may result in physical injuries and damage to property.

- If work is carried out on an operable system, the main switch on the control cabinet must be turned to the OFF position and secured with a padlock to prevent unauthorized persons from switching it on again.
- Inform the persons involved by means of a sign (e.g. affix a warning sign).
- Warn all persons concerned before putting the system back into operation.

WARNING

Danger to life and limb when working on live parts

Before commencing work on live parts of the robot system and/or on electrical systems, measures must be taken to ensure that the 5 safety rules are followed. It is essential that the 5 safety steps are followed in the correct order. Death, severe injuries or damage to property may result.

1. De-energize
2. Secure against unintentional restart
3. Ensure that the system is de-energized
4. Ground and short-circuit the system
5. Cover or erect barriers around neighboring energized parts

Once the work is completed, tools and equipment must be removed and the measures rescinded in reverse sequence.

DANGER

Danger to life and limb due to defective or unsuitable load suspension devices

If defective or non-approved load suspension devices are used, the load may fall off or start to swing. Failure to observe this can lead to death, injury or property damage.

- Before using load suspension devices, check for defects (e.g. damage, corrosion, deformation, wear, cracks) and exchange components if necessary.
- Use only inspected and approved load suspension devices.
- Use only load suspension devices with a sufficient load-bearing capacity.

WARNING

Risk of crushing during removal and installation of motor

When removing or installing the motor, there is a risk of injury by crushing. This could result in hand injuries.

- Wear protective gloves.

NOTICE

Wear and premature failure due to damage to toothing

Damage to the toothing of the motor and gear unit can lead to increased wear and premature failure of the components.

- During cleaning, ensure that the toothing is not damaged.
- Before installation, check the toothing of the motor and gear unit for damage.

To ensure safe use of our products, we recommend regularly requesting up-to-date safety data sheets from the manufacturers of auxiliary and operating materials.

9.8.1 Removing motor A4

Description

The following work steps are identical for motor A4 and motor A5.

Procedure

1. Release and unplug connectors XM4 and XP4 at the sockets.
2. Unscrew 4 M8x25-8.8-A2K Allen screws from motor A4.
3. Release motor A4 and pull it out together with connecting shaft A4, being careful not to tilt it.
4. Set down motor A4 together with connecting shaft A4.

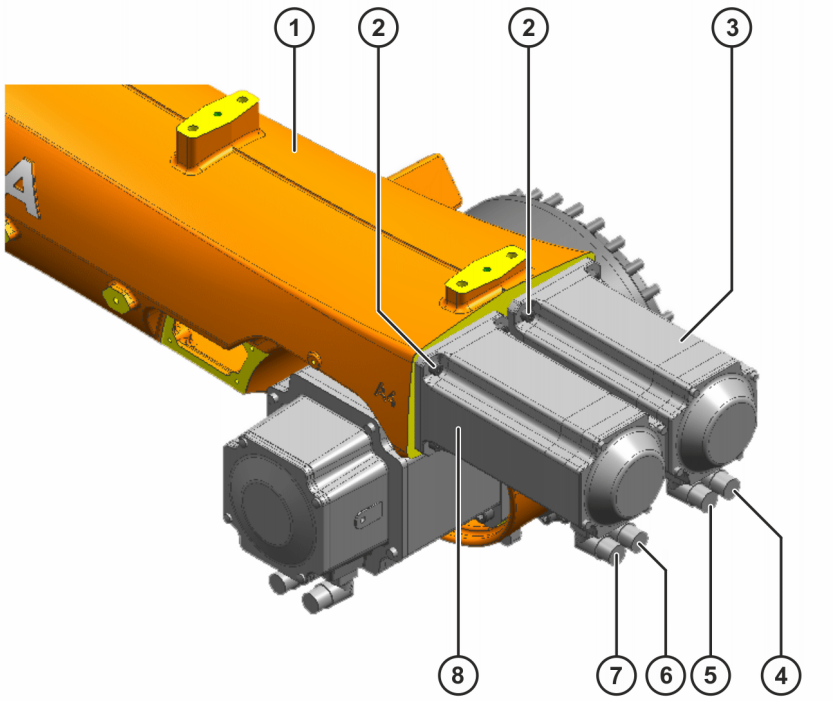

Fig. 9-55: Motors A4 and A5

1 Robot arm
2 M8x25-8.8-A2K Allen screw
3 Motor A5
4 Connector XM5
5 Connector XP5
6 Connector XM4
7 Connector XP4
8 Motor A4

5. Pull connecting shaft A4 off motor shaft.
6. Take compression spring and, if applicable, back-up ring off the motor shaft.

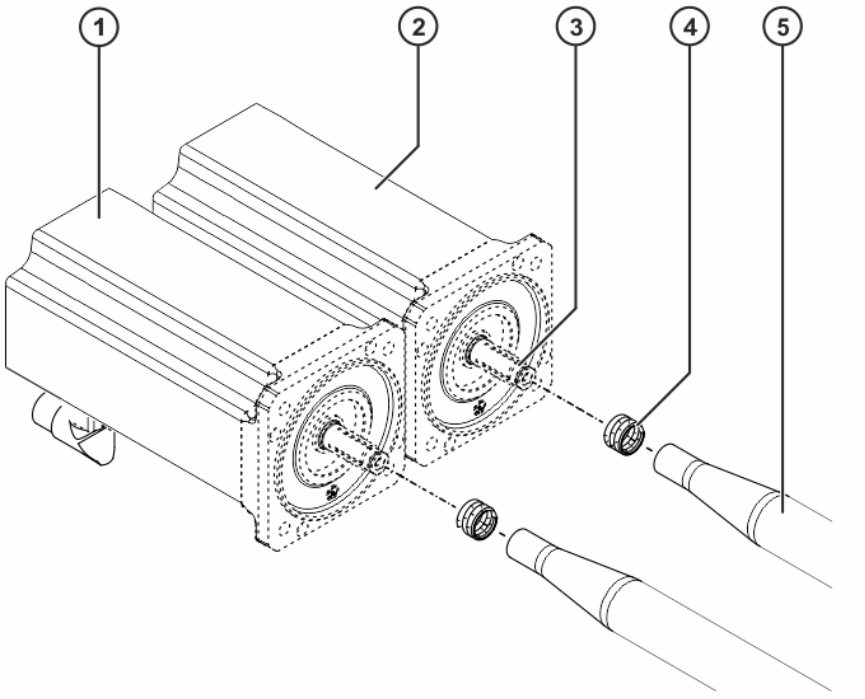

Fig. 9-56: Connecting shafts A4 and A5

1 Motor A5
2 Motor A4
3 Motor shaft with involute toothing
4 Compression spring
5 Connecting shaft A4

7. If the motor is not to be reinstalled, it must be disposed of properly or protected against corrosion before being put into storage.

9.8.2 Removing motor A5

Description

The following work steps are identical for motor A4 and motor A5.

Procedure

1. Release and unplug connectors XM5 and XP5 at the sockets.
2. Unscrew 4 M8x25-8.8-A2K Allen screws from motor A5.
3. Release motor A5 and pull it out together with connecting shaft A5, being careful not to tilt it.
4. Set down motor A5 together with connecting shaft A5.

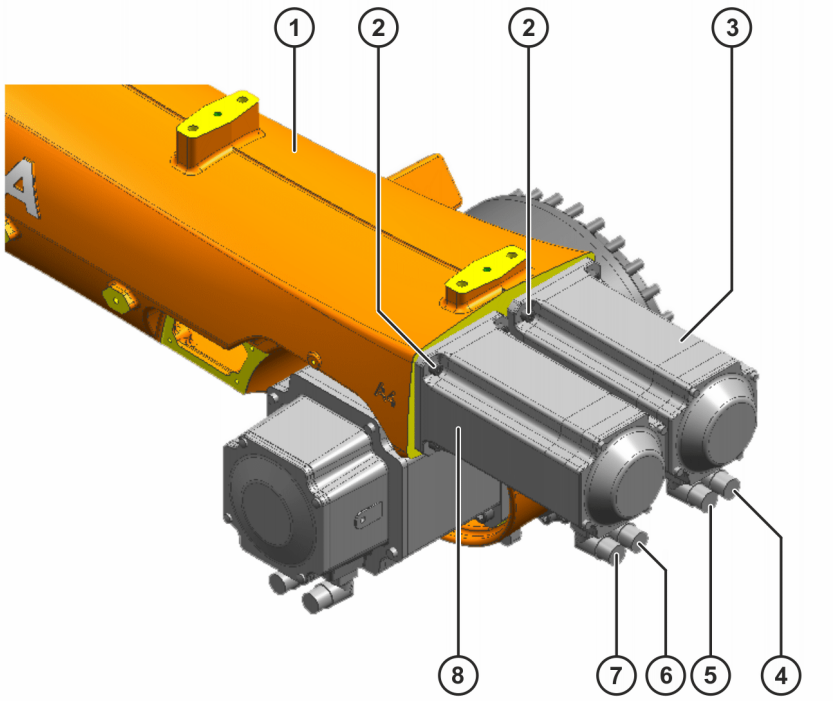

Fig. 9-57: Motors A4 and A5

1 Robot arm
2 M8x25-8.8-A2K Allen screw
3 Motor A5
4 Connector XM5
5 Connector XP5
6 Connector XM4
7 Connector XP4
8 Motor A4

5. Pull connecting shaft A5 off motor shaft.
6. Take compression spring and, if applicable, back-up ring off the motor shaft.

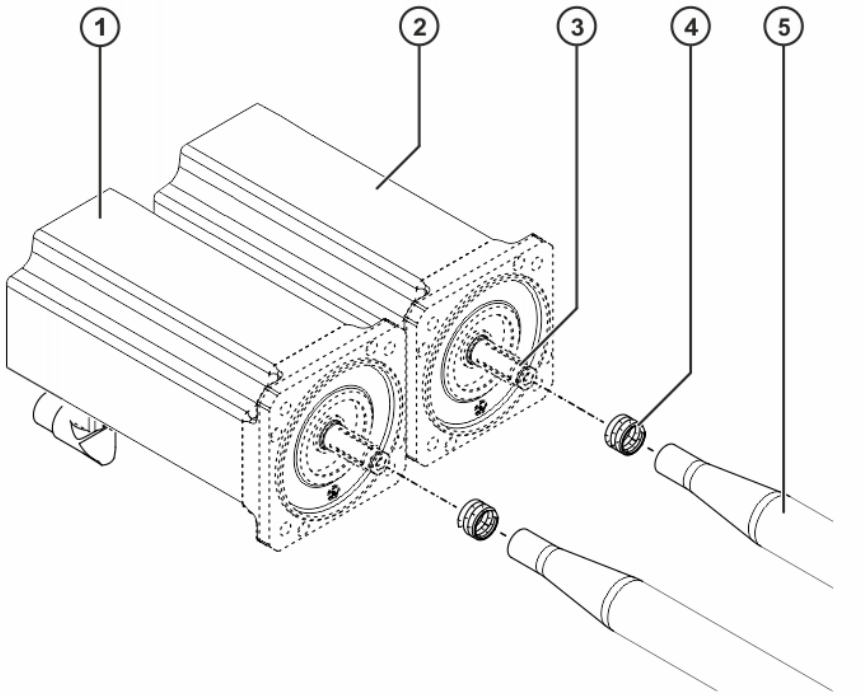

Fig. 9-58: Connecting shafts A4 and A5

1 Motor A5
2 Motor A4
3 Motor shaft with involute toothing
4 Compression spring
5 Connecting shaft A4

7. If the motor is not to be reinstalled, it must be disposed of properly or protected against corrosion before being put into storage.

9.8.3 Installing motor A5

Description

The following work steps are identical for motor A4 and motor A5.

Procedure

1. If a new motor is to be installed, remove any corrosion protection it may have prior to installation.
2. Clean the toothing on connecting shaft A5 and motor shaft A5, and check for wear.
   In the case of damage and/or wear, connecting shaft A5 must be exchanged.
3. Apply a thin but continuous coat of Microlube GL 261 to the toothing on connecting shaft A5.
4. Mount compression spring on motor shaft A5.
   If there was a back-up ring on the motor shaft when the motor was removed, it must be disposed of and not reused on installing a new motor.
5. Push connecting shaft A5 onto motor shaft A5.

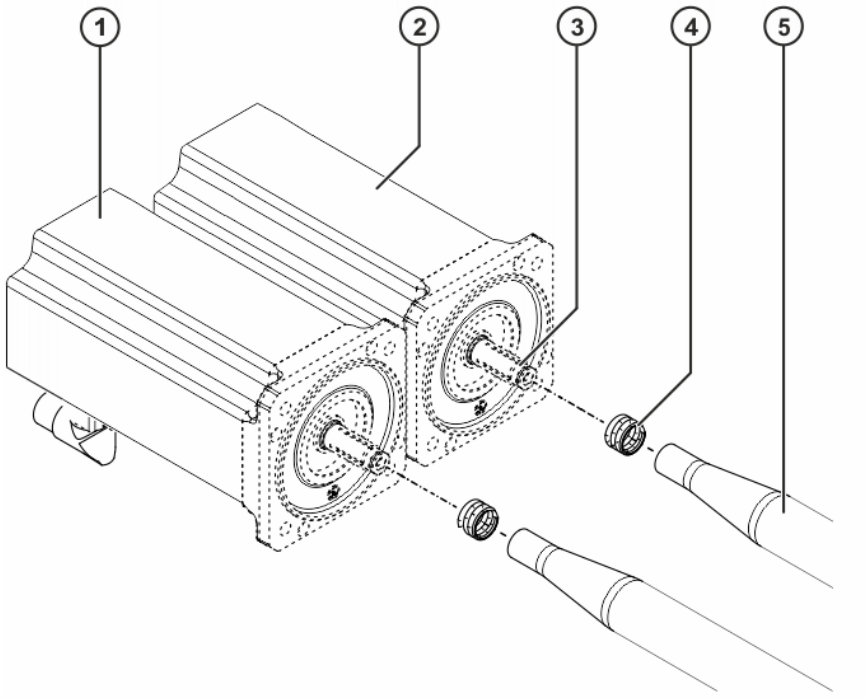

Fig. 9-59: Connecting shafts A4 and A5

1 Motor A5
2 Motor A4
3 Motor shaft with involute toothing
4 Compression spring
5 Connecting shaft A4

6. The mounting surfaces (motor A5 and robot arm) must be dry and free of dust.
7. Position sockets XM5 and XP5 so that they are located on the underside after motor A5 has been inserted into the robot arm.
8. Pick up motor A5 and insert it into the robot arm, being careful not to tilt it and ensuring that the connecting shafts (toothing) are correctly engaged in the in-line wrist.

Insertion of motor can be facilitated by turning it gently about its rotational axis.

9. Insert 4 M8x25-8.8-A2K Allen screws.
10. Tighten 4 M8x25-8.8-A2K Allen screws with a torque wrench in diagonally opposite sequence. Increase the tightening torque to the specified value in several stages.
11. Plug connectors XM5 and XP5 into the sockets. The pins and coding elements of the connectors must be taken into consideration. When inserting the connectors, turn them until they clearly lock into the coding elements (twist-proof).

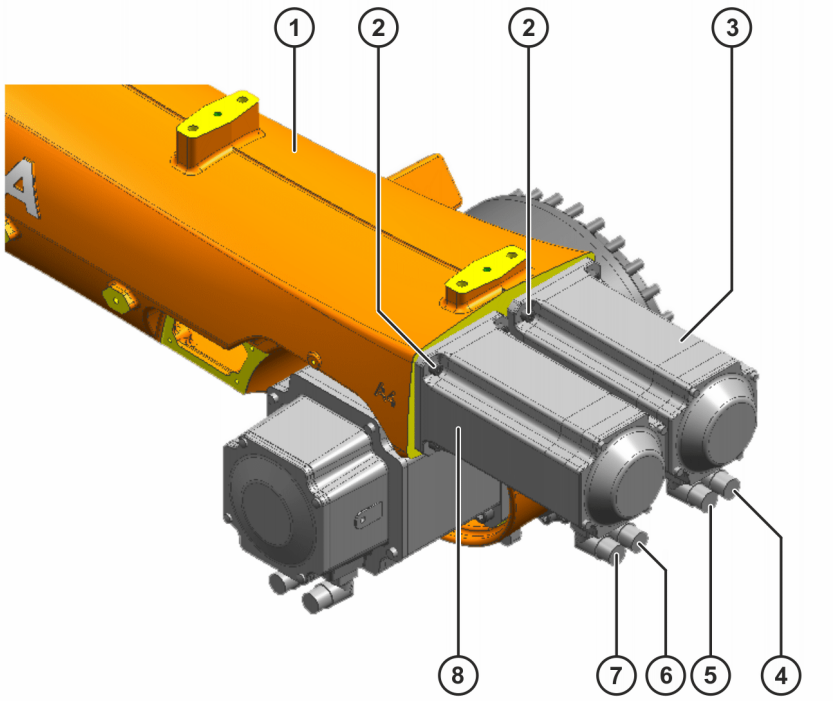

Fig. 9-60: Motors A4 and A5

1 Robot arm
2 M8x25-8.8-A2K Allen screw
3 Motor A5
4 Connector XM5
5 Connector XP5
6 Connector XM4
7 Connector XP4
8 Motor A4

9.8.4 Installing motor A4

Description

The following work steps are identical for motor A4 and motor A5.

Procedure

1. If a new motor is to be installed, remove any corrosion protection it may have prior to installation.
2. Clean the toothing on connecting shaft A4 and motor shaft A4, and check for wear.
   In the case of damage and/or wear, connecting shaft A4 must be exchanged.
3. Apply a thin but continuous coat of Microlube GL 261 to the toothing on connecting shaft A4.
4. Mount compression spring on motor shaft A5.
   If there was a back-up ring on the motor shaft when the motor was removed, it must be disposed of and not reused on installing a new motor.
5. Push connecting shaft A4 onto motor shaft A4.

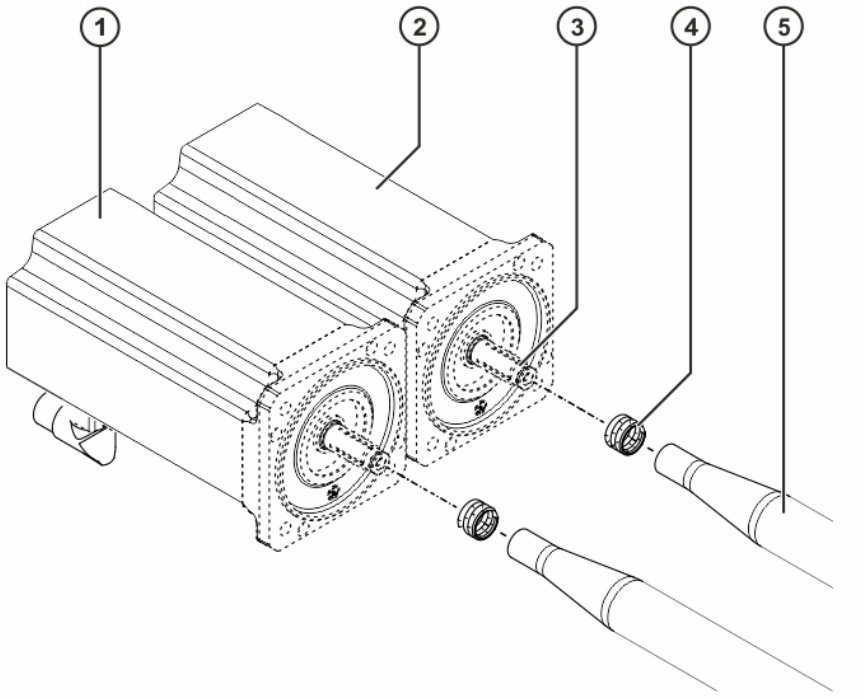

Fig. 9-61: Connecting shafts A4 and A5

1 Motor A5
2 Motor A4
3 Motor shaft with involute toothing
4 Compression spring
5 Connecting shaft A4

6. The mounting surfaces (motor A4 and robot arm) must be dry and free of dust.
7. Position sockets XM4 and XP4 so that they are located on the underside after motor A4 has been inserted into the robot arm.
8. Pick up motor A4 and insert it into the robot arm, being careful not to tilt it and ensuring that the connecting shafts (toothing) are correctly engaged in the in-line wrist.

Insertion of motor can be facilitated by turning it gently about its rotational axis.

9. Insert 4 M8x25-8.8-A2K Allen screws.
10. Tighten 4 M8x25-8.8-A2K Allen screws with a torque wrench in diagonally opposite sequence. Increase the tightening torque to the specified value in several stages.
11. Plug connectors XM4 and XP4 into the sockets. The pins and coding elements of the connectors must be taken into consideration. When inserting the connectors, turn them until they clearly lock into the coding elements (twist-proof).

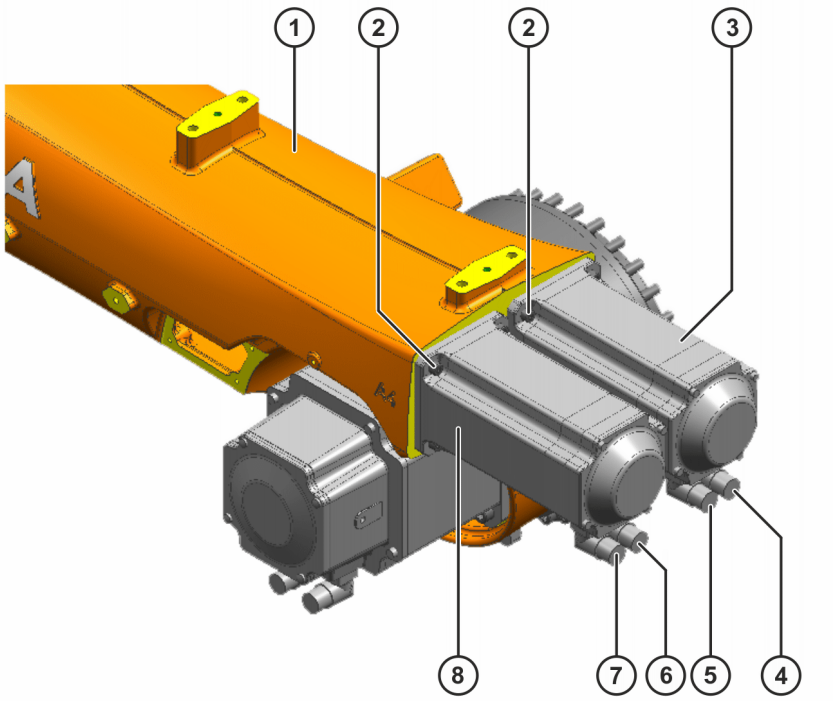

Fig. 9-62: Motors A4 and A5

1 Robot arm
2 M8x25-8.8-A2K Allen screw
3 Motor A5
4 Connector XM5
5 Connector XP5
6 Connector XM4
7 Connector XP4
8 Motor A4

9.8.5 Concluding work

The following concluding work must be carried out:

- Move A4, A5 and A6 of the robot and look out for irregularities.
- Carry out mastering of A4, A5 and A6.

Detailed information about mastering can be found in the system software documentation.

- Test the program in Manual Reduced Velocity mode (T1).

9.9 Description of the electrical installations

Overview

The electrical installations of the robot consist of:

- Cable set
- RDC box

Description

The electrical installations consist of the cable set from A1 to A6 as well as the electronic modules, such as the RDC and EDS. The cable set includes all the supply and control cables for the motors of axes 1 to 6 as well as the cables for the protective circuit. All the connections on the motors are screwed plug-and-socket connections.

RDC and EDS are explained in more detail in the operating instructions of the robot controller.

The interface for connecting the connecting cables to the robot is located on the base frame at the rear of the robot. The connecting cables from the controller (motor cable X30, data cable X31, the ground conductor and, if applicable, the cables for external axes) are connected to it by means of connectors.

The selected routing of cables and hoses within the robot arm ensures that they are guided without strain or kinking throughout the entire motion range of the robot

The following diagram gives an overview of the installation and routing of the cables and hoses on the manipulator (>>> *Fig. 9-63*).

NOTICE

Break in cables when modifying the cable set

The cable set is designed to stretch sufficiently with each robot motion. Additional attachments can place a heavy load on the cable set and thus damage it. Error messages and damage to property could result.

- Do not attach any other lines to the cable set; use an external energy supply system if necessary.
- Do not fix the cable set in place with cable straps, Velcro cable straps or the like.
- Keep foreign bodies away.

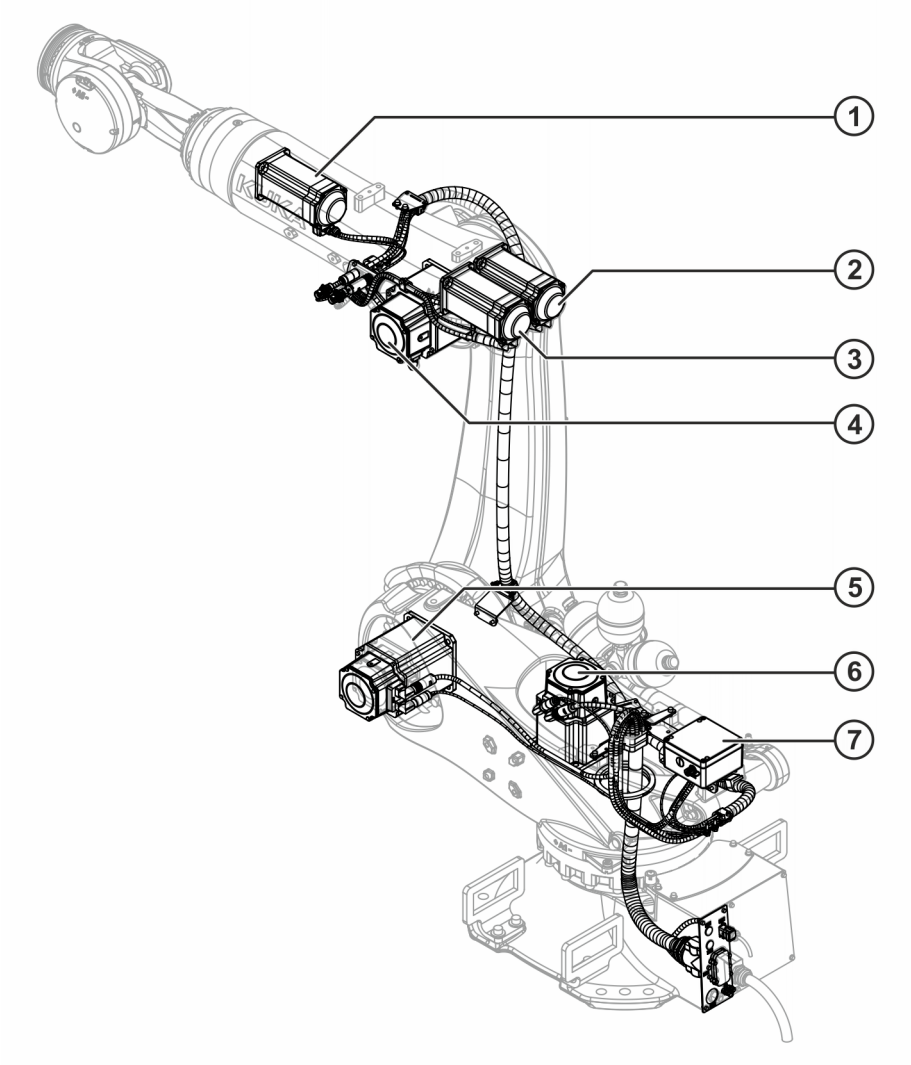

Fig. 9-63: Overview of electrical installations

1	Motor A6	5	Motor A2
2	Motor A5	6	Motor A1
3	Motor A4	7	RDC box
4	Motor A3		

Wiring diagrams

Designation	Connection	Figure
Wiring diagram A1	XM1	(>>> *Fig. 9-64*)
Wiring diagram A2	XM2	(>>> *Fig. 9-65*)
Wiring diagram A3	XM3	(>>> *Fig. 9-66*)
Wiring diagram A4	XM4	(>>> *Fig. 9-67*)
Wiring diagram A5	XM5	(>>> *Fig. 9-68*)
Wiring diagram A6	XM6	(>>> *Fig. 9-69*)
Data cable RDC X31	RDC X31	(>>> *Fig. 9-70*)
Data cable RDC X32	RDC X32	(>>> *Fig. 9-71*)
Data cable, external axis X7	XP7	(>>> *Fig. 9-72*)
Data cable, external axis X8	XP8	(>>> *Fig. 9-72*)

Designation	Connection	Figure
Protective circuit	Ring cable lug	(>>> *Fig. 9-73*)

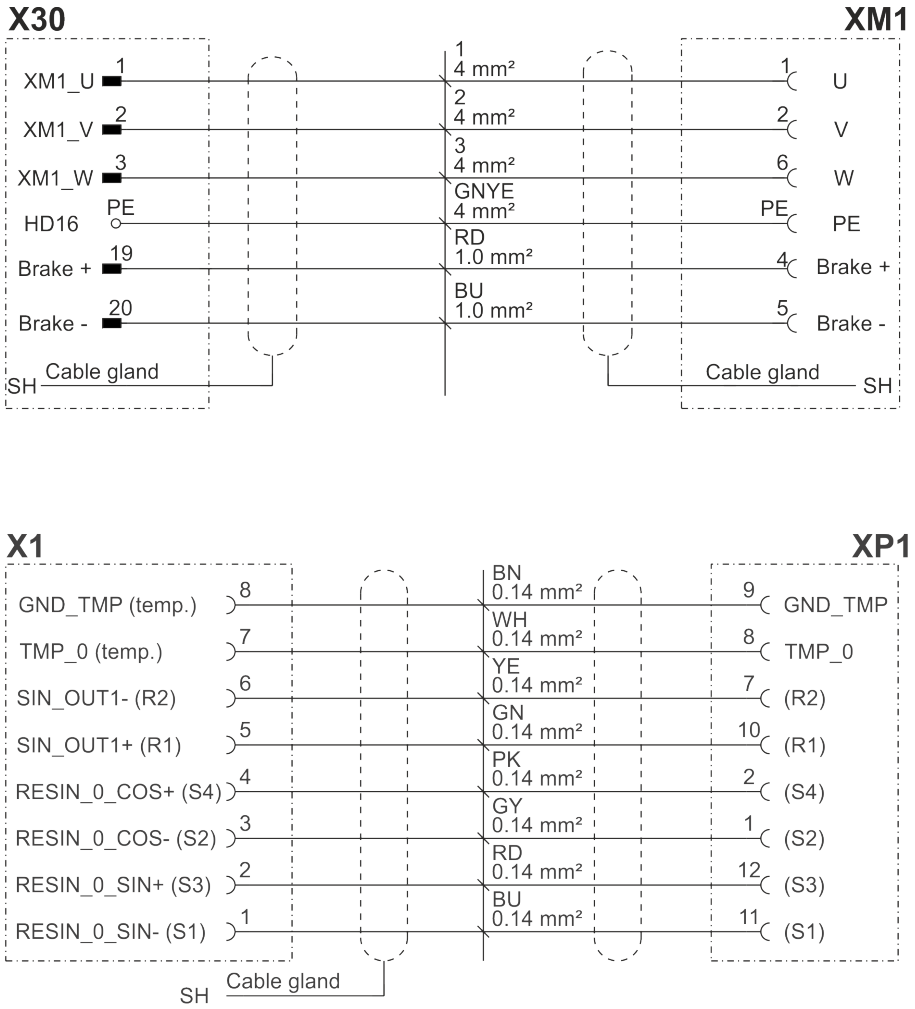

Fig. 9-64: Wiring diagram A1

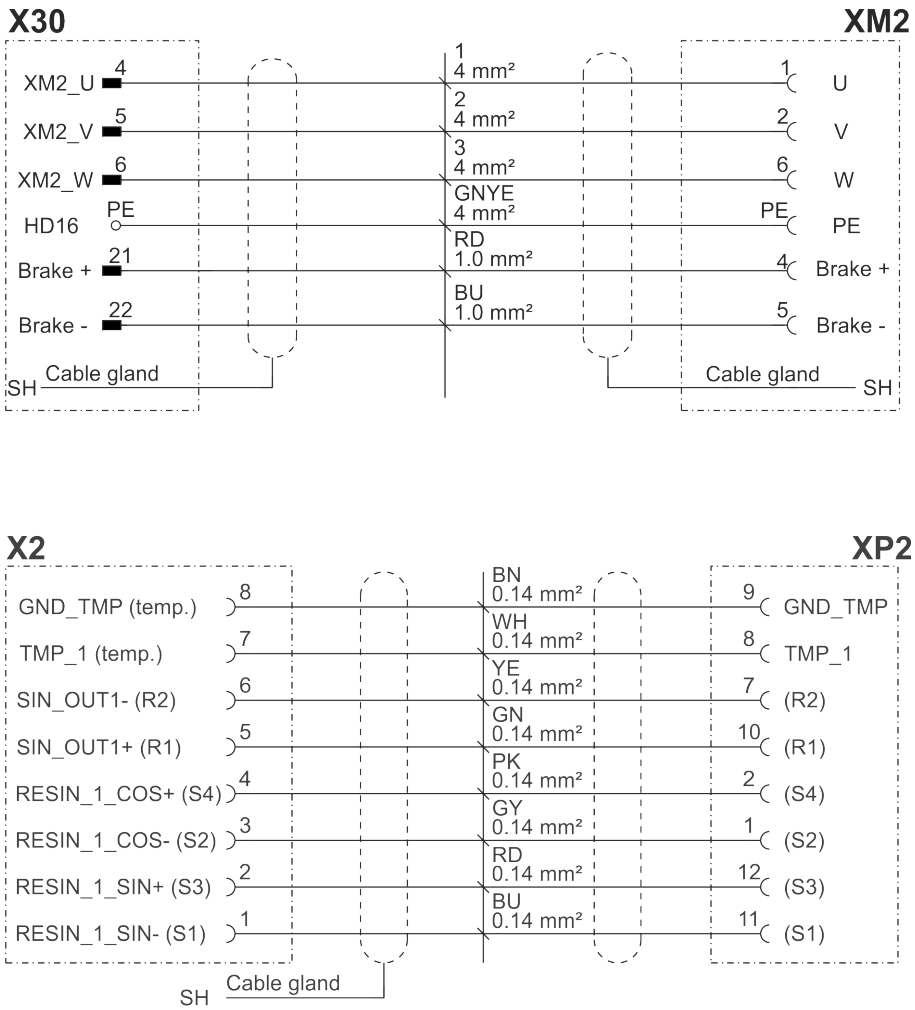

Fig. 9-65: Wiring diagram A2

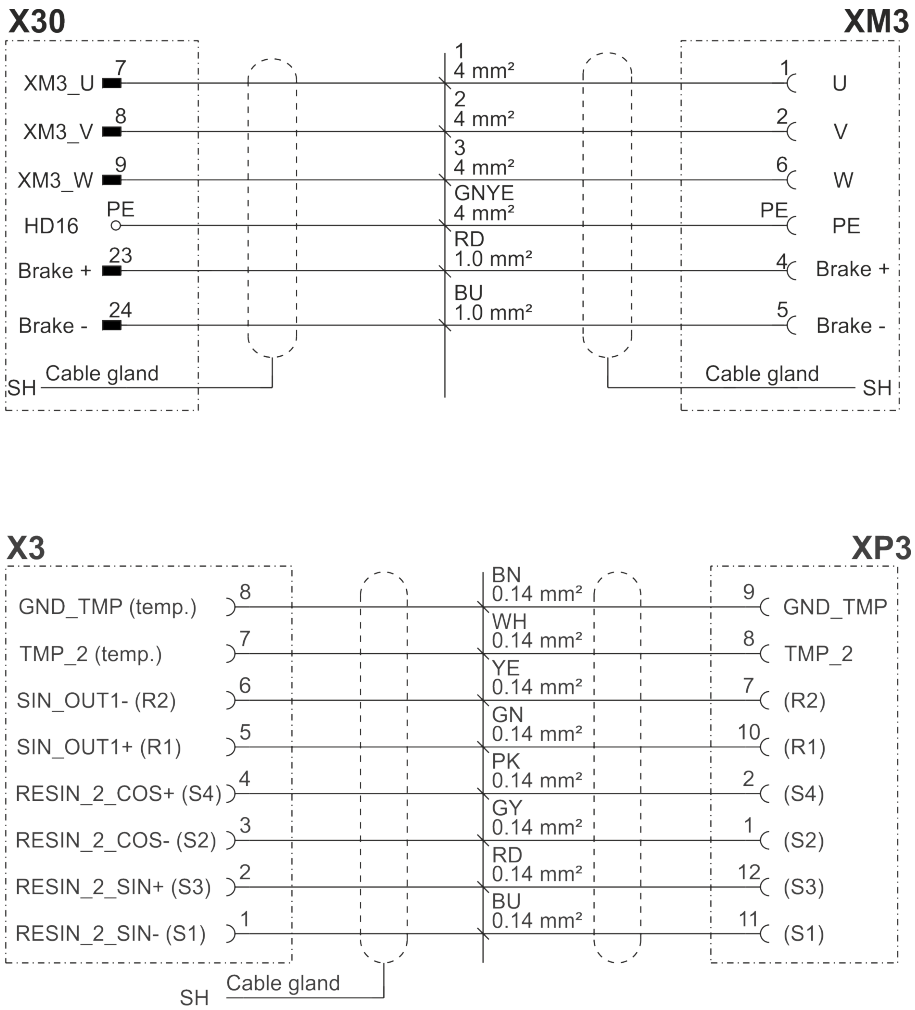

Fig. 9-66: Wiring diagram A3

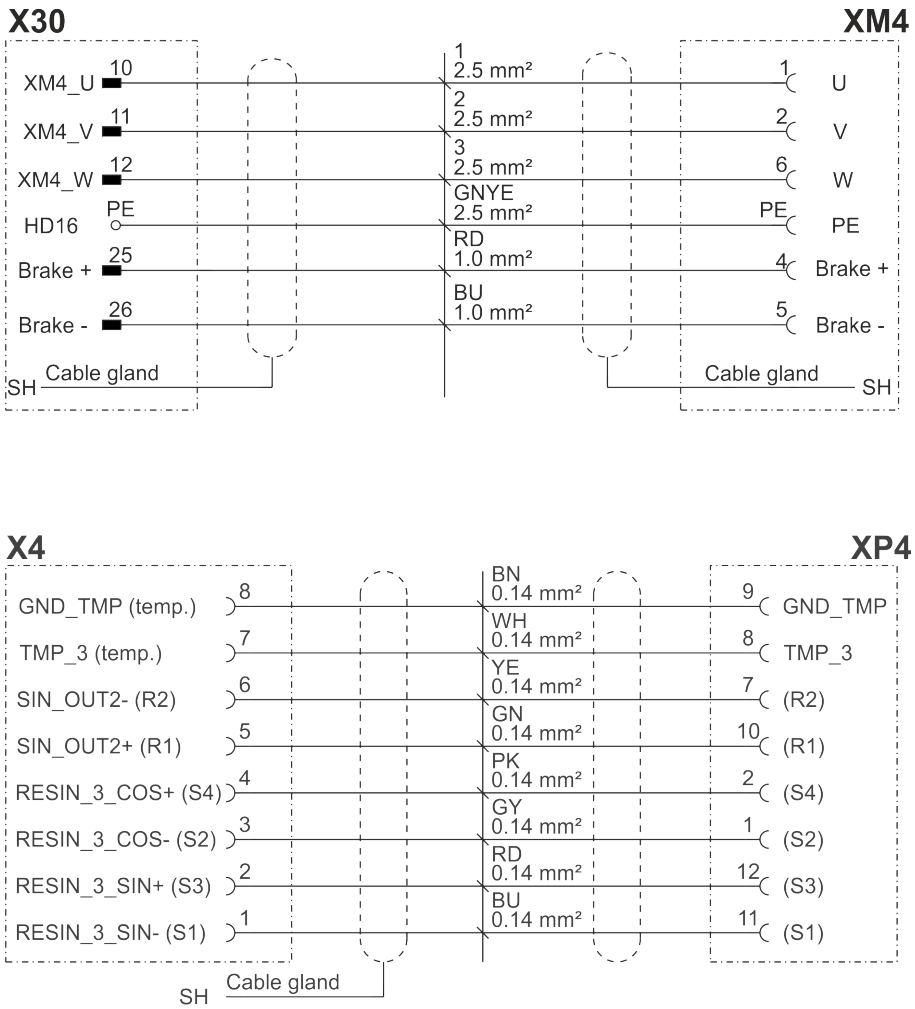

Fig. 9-67: Wiring diagram A4

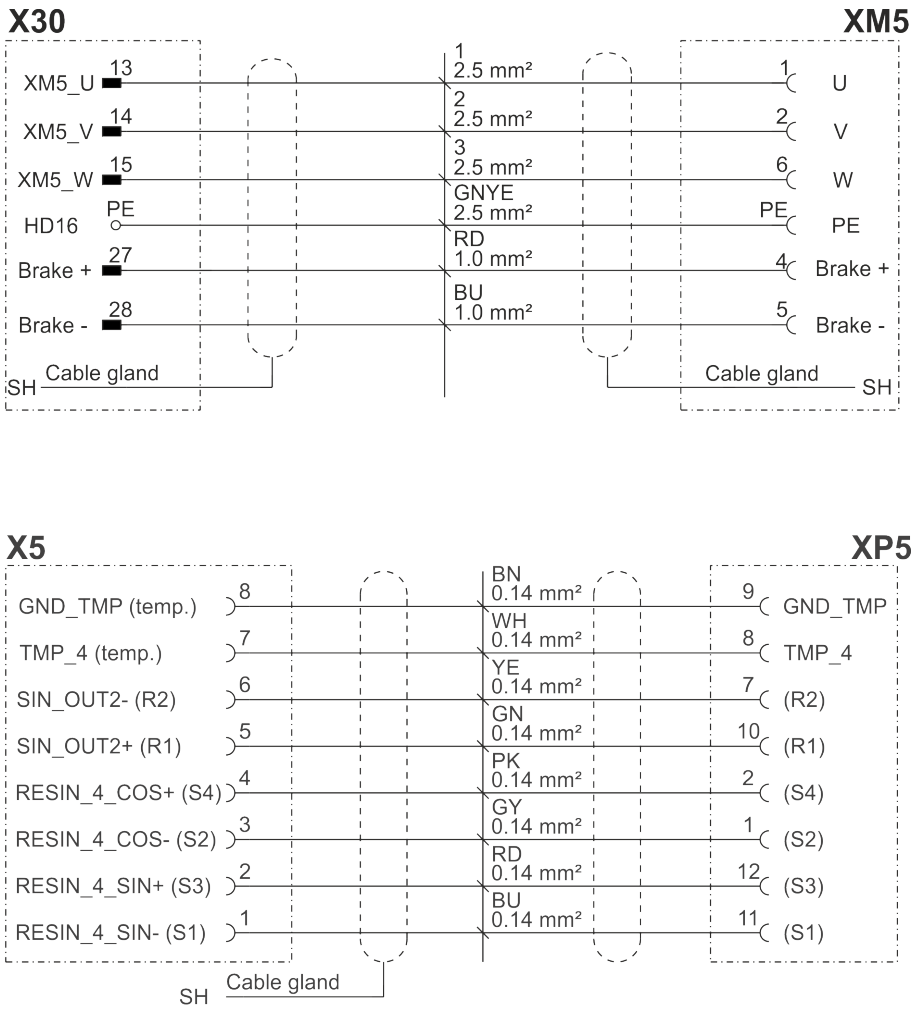

Fig. 9-68: Wiring diagram A5

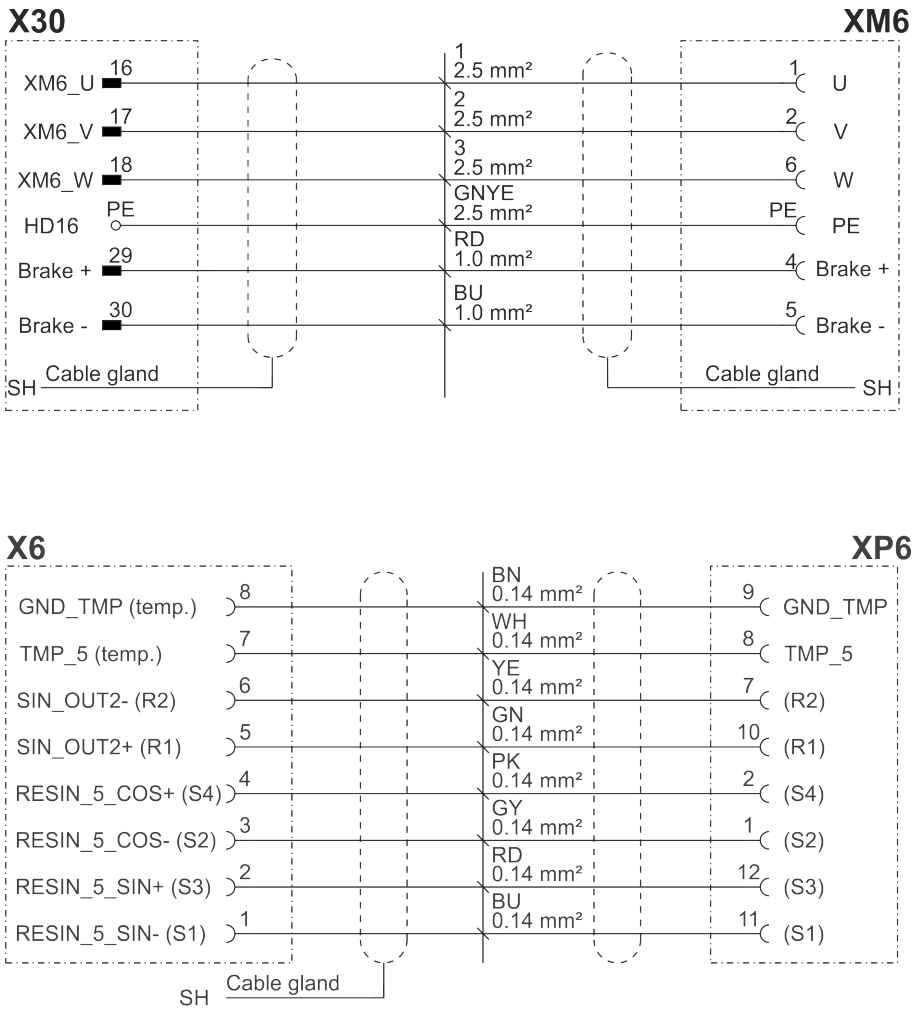

Fig. 9-69: Wiring diagram A6

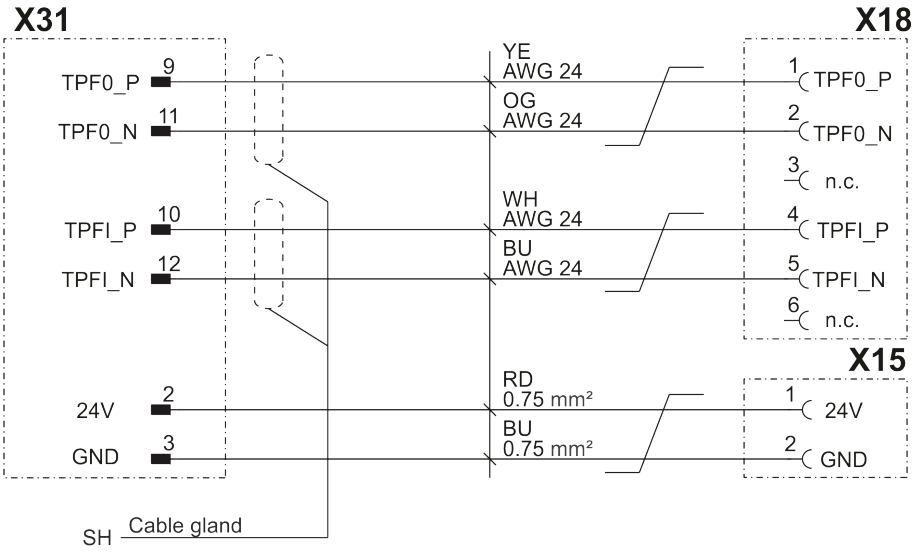

Fig. 9-70: Wiring diagram, RDC X31

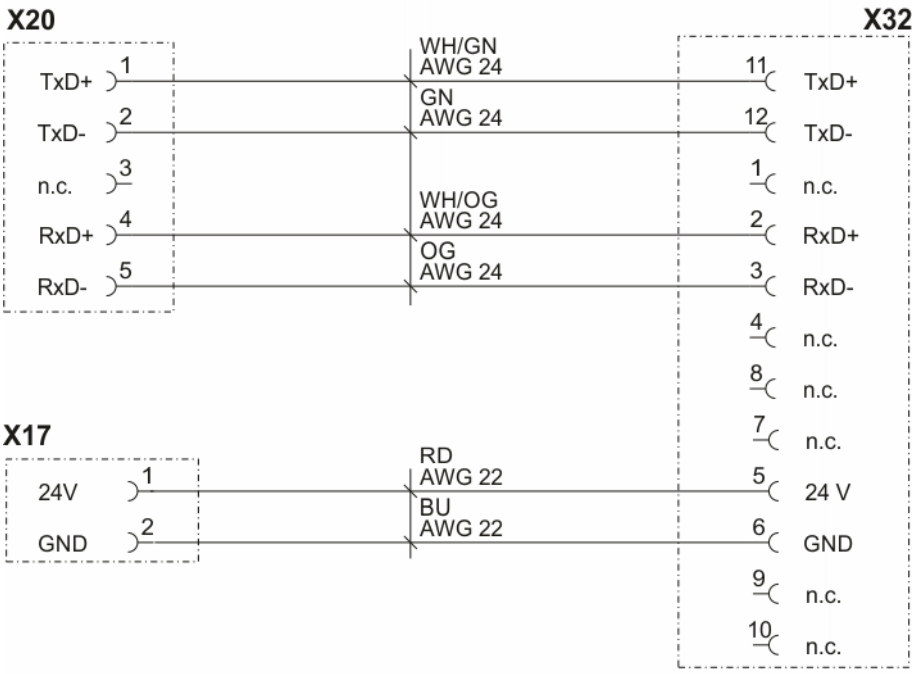

Fig. 9-71: Wiring diagram, RDC X32

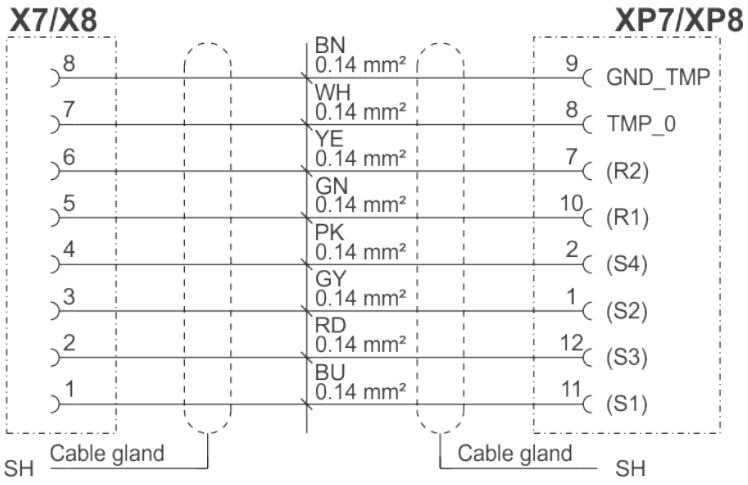

Fig. 9-72: Wiring diagram, data cable X7/X8 - XP7/XP8

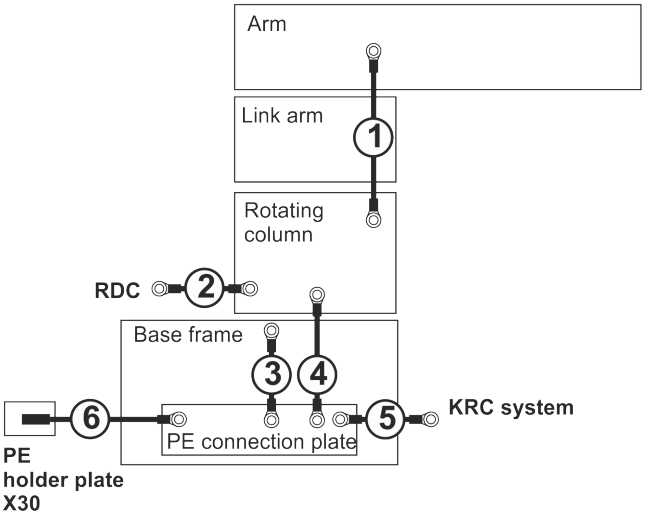

Fig. 9-73: Wiring diagram, protective circuit

1 Ground conductor, arm – rotating column
Cross-section: 4 mm^2

2 Ground conductor, RDC – rotating column
Cross-section: 4 mm^2

3 Ground conductor, PE connection plate – base frame
Cross-section: 4 mm^2

4 Ground conductor, PE connection plate – rotating column
Cross-section: 4 mm^2

5 2x external ground conductor (KRC/system)
Cross-section: 16 mm^2

6 Ground conductor, PE connection plate – PE holding plate
Cross-section: 4 mm^2

10 Decommissioning, storage and disposal

10.1 Decommissioning

Description

This section describes all the work required for decommissioning the robot if the robot is to be removed from the system. After decommissioning, it is prepared for storage or for transportation to a different location.

Following its removal, the robot can be transported by means of transport tackle and crane or by fork lift truck.

Equipment

The following equipment is required:

Designation	Article number
Lifting tackle/rope sling with sufficient load-bearing capacity	0000-382-665
Crane with sufficient load-bearing capacity	-
Fork lift truck with sufficient load-bearing capacity	-
Set of Allen keys 1.5; 2; 2.5; 3; 4; 5; 6; 8; 10 mm	-

Precondition

- The removal site must be accessible with a crane or with a fork lift truck for transportation.
- There is no hazard posed by other system components.

Work safety

WARNING

Danger to life and limb due to unintended robot motions

When carrying out the following work, the robot must be moved several times between the individual work steps. Unintentional movements of the robot can cause death, serious injury or material damage.

- While work is being carried out on the robot, it must always be secured by actuating the EMERGENCY STOP device.
- If work is carried out on an operational robot that is switched on, the robot must only be moved at reduced velocity. It must be possible to stop the robot at any time by actuating an EMERGENCY STOP device. Operation must be limited to what is absolutely necessary.
- Warn all persons concerned before switching on and moving the robot.

10.1.1 Moving the robot into its transport position

Procedure

1. Secure the robot by pressing the EMERGENCY STOP device.
2. Remove tools and equipment.
3. Put the robot into operation and move it into the transport position.

4. Secure the robot by activating the EMERGENCY STOP device and then shut down the robot.

Transport position	
A1	0 °
A2	-115 °
A3	-108 °
A4	0 °
A5	115 °
A6	0 °

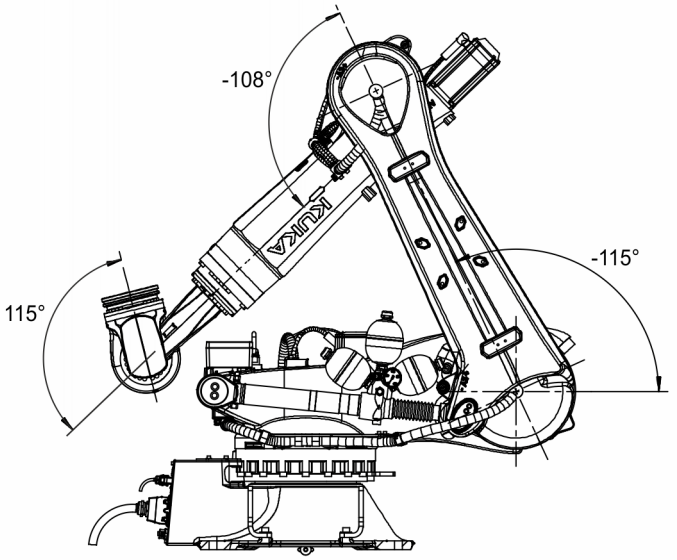

Fig. 10-1: Transport position

10.1.2 Removing the robot

Procedure

1. Release and disconnect the peripheral connections.
2. Release and disconnect the motor cable and data cable connectors (>>> *Fig. 10-2*).
3. Unscrew the hexagon nut from the ground conductor, take off the washers and lock washers and pull off the ground conductor.
4. Unscrew and remove the 8 hexagon bolts and conical spring washers.
5. Lift the robot vertically off the mounting surface and transport it away.

   Take care not to damage the two pins when lifting off the robot.

CAUTION

Risk of injury due to abrupt detachment of the robot

If the robot is caught on the mounting surface, it may come free abruptly. Injuries or damage to property may result.

– Remove the fastening materials completely.
– Remove any adhesives.

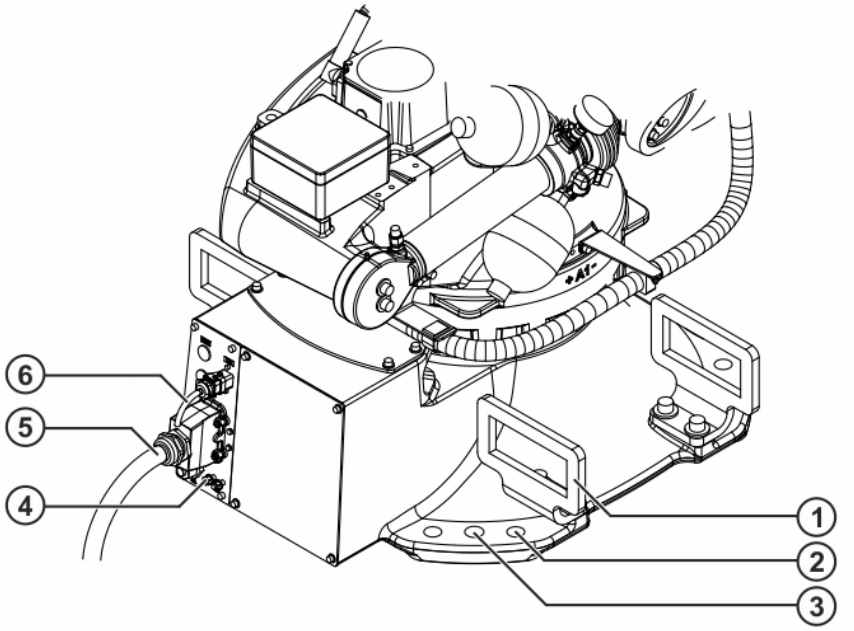

Fig. 10-2: Removing the robot

1	Fork slots	4	Ground conductor 2x
2	Hexagon bolts	5	Motor cable
3	Pin	6	Data cable

10.1.3 Concluding work

The following concluding work must be carried out:

- Prepare the robot for storage if the robot is not to be reinstalled.

10.2 Storage

Description

For storage, the robot must be removed, cleaned and suitably covered.

Storage location

The storage location must meet the following requirements:

- Virtually dry and free of dust
- Avoid temperature fluctuations
- Avoid wind and drafts
- Avoid condensation
- No exposure to direct sunlight
- Maintain the permissible temperature ranges for storage
- The packaging film cannot be damaged.

Equipment

The following equipment is required:

Designation	Article number
Lifting tackle/rope sling with sufficient load-bearing capacity	0000-342-903
Crane with sufficient load-bearing capacity	-
Fork lift truck with sufficient load-bearing capacity	-
Permissible cleaning tools (e.g. cloths, brushes)	-

Material

The following material is required:

Designation	Article number	Quantity
Covers that cannot detach themselves and which can withstand the expected environmental conditions	-	-
Cleaning agent solvent-free, water-soluble, non-flammable, non-aggressive, no steam, no refrigerants	-	-

Precondition

- Loose parts or parts that might knock against other parts have been removed from the robot.
- Tools and equipment have been removed.

Work safety

WARNING

Danger to life and limb due to unintended robot motions

When carrying out the following work, the robot must be moved several times between the individual work steps. Unintentional movements of the robot can cause death, serious injury or material damage.

- While work is being carried out on the robot, it must always be secured by actuating the EMERGENCY STOP device.
- If work is carried out on an operational robot that is switched on, the robot must only be moved at reduced velocity. It must be possible to stop the robot at any time by actuating an EMERGENCY STOP device. Operation must be limited to what is absolutely necessary.
- Warn all persons concerned before switching on and moving the robot.

10.2.1 Moving the robot into its transport position

Procedure

1. Secure the robot by pressing the EMERGENCY STOP device.
2. Remove tools and equipment.
3. Put the robot into operation and move it into the transport position.
4. Secure the robot by activating the EMERGENCY STOP device and then shut down the robot.

Transport position	
A1	0 °
A2	-115 °
A3	-108 °
A4	0 °
A5	115 °
A6	0 °

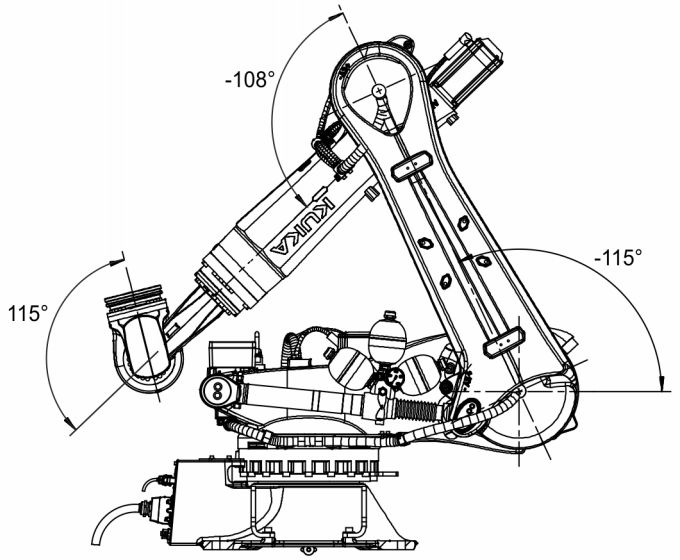

Fig. 10-3: Transport position

10.2.2 Removing the robot

Procedure

1. Release and disconnect the peripheral connections.
2. Release and disconnect the motor cable and data cable connectors (>>> *Fig. 10-4*).
3. Unscrew the hexagon nut from the ground conductor, take off the washers and lock washers and pull off the ground conductor.
4. Unscrew and remove the 8 hexagon bolts and conical spring washers.
5. Lift the robot vertically off the mounting surface and transport it away.

   Take care not to damage the two pins when lifting off the robot.

CAUTION

Risk of injury due to abrupt detachment of the robot

If the robot is caught on the mounting surface, it may come free abruptly. Injuries or damage to property may result.

- Remove the fastening materials completely.
- Remove any adhesives.

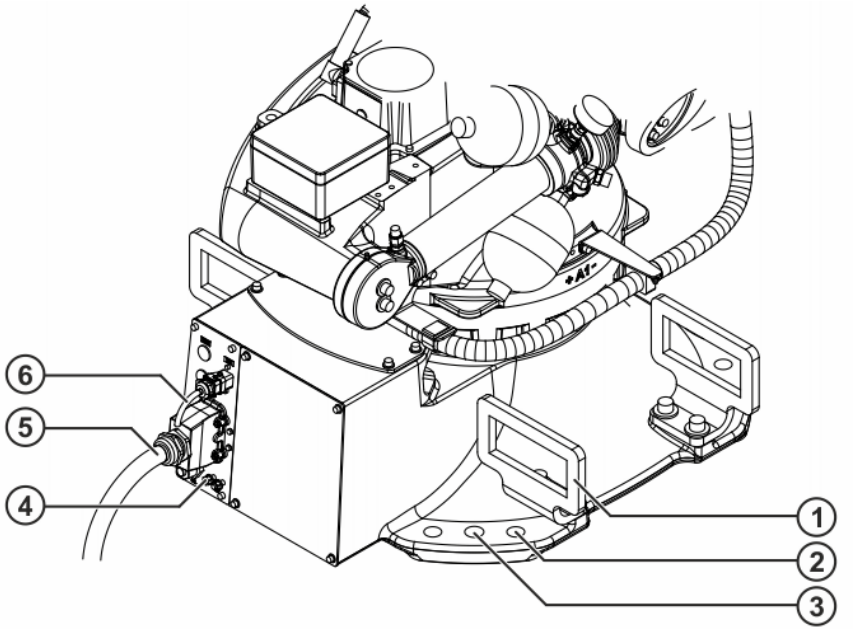

Fig. 10-4: Removing the robot

1 Fork slots	4 Ground conductor 2x
2 Hexagon bolts	5 Motor cable
3 Pin	6 Data cable

10.2.3 Cleaning

Procedure

1. Shut down the robot.
2. If necessary, shut adjacent system components down and lock them.
3. Remove enclosures if this is necessary in order to carry out the cleaning work.
4. Clean the robot.
5. Fully remove all cleaning agents from the robot.
6. Clean any areas of corrosion and reapply corrosion protection.
7. Install any safety equipment that has been removed.
8. Put back in place any enclosures that have been removed.

10.2.4 Preparing for storage

Procedure

1. Perform a visual inspection of the robot.
2. Remove any foreign bodies.
3. Remove any corrosion.
4. Attach all covers to the robot and check that the seals are correctly in place.
5. Seal off electrical connections with suitable covers.
6. Seal hose connections by suitable means.
7. Cover the robot with plastic film and seal it at the base frame against dust.

   If necessary, add a desiccant beneath the sheeting.

10.2.5 Concluding work

No concluding work is required.

10.3 Disposal

When the manipulator reaches the end of its useful life, it can be removed from the system and dismantled, and the materials can be disposed of properly by type.

The following table provides an overview of the materials used in the manipulator. All plastic components are marked with a material designation and must be disposed of accordingly.

WARNING

The hydropneumatic counterbalancing system on the robot is filled with nitrogen and hydraulic oil under pressure; improper handling can lead to personal injury and damage to property. If the hydropneumatic counterbalancing system to be disposed of, it must first be properly depressurized. Only pressure-free counterbalancing systems may be authorized for disposal.

Material	Subassembly, component	Additional information
Metal		
Cast-iron material	Base frame, rotating column, link arm, arm, in-line wrist	
Copper	Cables, wires	
Light alloy casting	Spur gear housing, swivel housing	
Steel	Gear units, screws and washers, connecting shafts, bearings, holder plates	
Electrical parts		
	Electronic components, such as RDC	Dispose of as electrical scrap without disassembling.
	Motors	Dispose of motors without dismantling.
Plastics		
ETFE	Flexible tube, protective fabric sleeve	
PA 6, PA R AB	Hinged clamps, flexible tubes	
PE 500	End stop buffers	
PU	Hoses	
PUR	Cable sheaths	
Viton, FKM, FPM	O-rings	
EPDM/TPE	Clamping pieces, RSGU clips	
POM/PP	Sliding elements	

Material	Subassembly, component	Additional information
Auxiliary substances and consumables		
Gear oil	Gear units	Optigear Synt. ALR 150
Hydraulic oil	Counterbalancing system	Hyspin ZZ 46 hydraulic oil
Lubricating grease	Counterbalancing system, bearing on arm / link arm	LGEP 2 lubricating grease
Lubricating grease	Gear teeth	Microlube GL 261 grease

Up-to-date safety data sheets must be requested from the manufacturers of auxiliary and operating materials. Further information about the auxiliary substances and consumables used can be found under:

(>>> *12.2 "Auxiliary substances and consumables used" Page 386*)

11 Options

11.1 Release device

Description

The release device can be used to move the manipulator manually after an accident or malfunction. The release device can be used for the motors of axes A1 to A5. It cannot be used for axis A6, as this motor is not accessible. It is only for use in exceptional circumstances and emergencies (e.g. for freeing people).

In the case of floor-mounted robots, the release device can be mounted on the base frame. For ceiling-mounted robots, the release device must be mounted on the cell in a clearly visible position.

The assembly includes a ratchet, a TORX key wrench and two sets of plates with one plate for each motor and a plate on the cast housing near the respective motor. The plates specify the direction of rotation for the ratchet and show the corresponding direction of motion of the manipulator.

In order to move the manipulator without drive energy in the event of an accident or malfunction, either a sufficient number of release devices or a sufficient amount of suitable standard tools (TORX key wrench TX25 or a size 8 flat-blade screwdriver and 12 mm combination wrench) must be available.

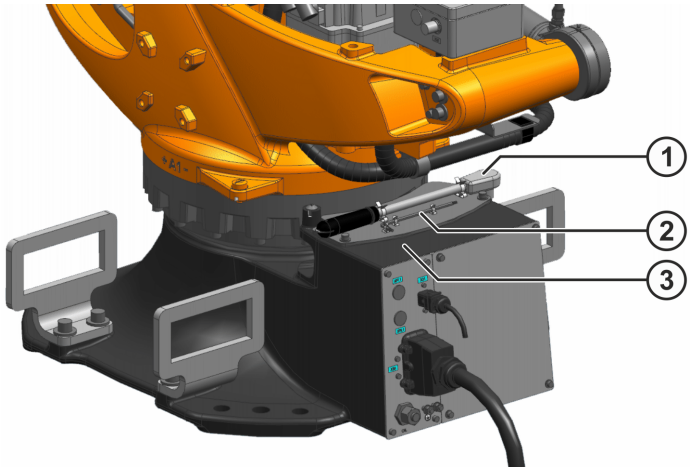

Fig. 11-1: Product overview

1 Release device
2 TX25 TORX key wrench
3 Base frame

Basic data

Designation	Article number	Weight
Release device	0000-341-621	approx. 3 kg

Further information about the ambient conditions is contained in the assembly instructions for the robot and robot controller.

Start-up and recommissioning

(>>> *11.1.1 "Starting up the release device" Page 372*)

Maintenance

If used for its intended purpose, the option requires minimal maintenance, i.e. visual inspections are recommended. In certain operating conditions, regular visual inspections may allow timely detection of changes. The nature and scope of the maintenance work depend very much on the specific area of application. This enables early detection of damage, thereby preventing failure of components and assemblies. Exchange damaged components or assemblies.

Disposal

When the release device reaches the end of its useful life, it can be removed and disposed of. The materials must be disposed of in accordance with the pertinent regulations and, where possible, separated and sorted for recycling.

11.1.1 Starting up the release device

Description

The release device can be used for moving the manipulator after an accident or malfunction without drive energy.

This section describes all work required to put the release device into operation. Installation of a floor-mounted robot is described. A release device for ceiling-mounted robots must be fastened to the cell wall.

This option is only for use in exceptional circumstances and emergencies, e.g. for rescuing people.

Equipment

The following equipment is required:

Designation	Article number
Set of Allen keys 1.5; 2; 2.5; 3; 4; 5; 6; 8; 10 mm	-
Torque wrench 5 Nm to 50 Nm	-

Material

The following material is required:

Designation	Article number	Quantity
Release device	0000-341-621	1
or 12 mm combination wrench and TORX key wrench TX25	-	1 each

Tightening torques

The tightening torques can be found under: (>>> *12.1 "Tightening torques" Page 385*)

These are valid for screws and nuts where no other specifications are given.

Screws of strength class 10.9 and higher, stainless steel screws of strength class 70 or 80, as well as screws with test certification may only

be tightened once with the rated tightening torque. These screws must be replaced with new ones when they are slackened for the first time.

Precondition

- The robot controller is switched off.
- The robot is freely accessible.

Work safety

SAFETY INSTRUCTION
The following procedure must be followed exactly!

CAUTION
Loss of mastering during movement without drive energy
After moving a motor without drive energy, the axis is no longer mastered. Injuries or damage to property may result.
• Remaster all axes.

11.1.1.1 Installing the release device

Procedure

1. Unscrew 4 M8x20-8.8 Allen screws from the cover plate and remove the cover plate from the base frame (>>> *Fig. 11-2*).
2. Position the clip plate on the base frame, insert 4 M8x20-8.8 Allen screws and conical spring washers and fasten in place. Increase the tightening torque to the specified value in several stages.
3. Place the release device and key wrench on the clip plate.

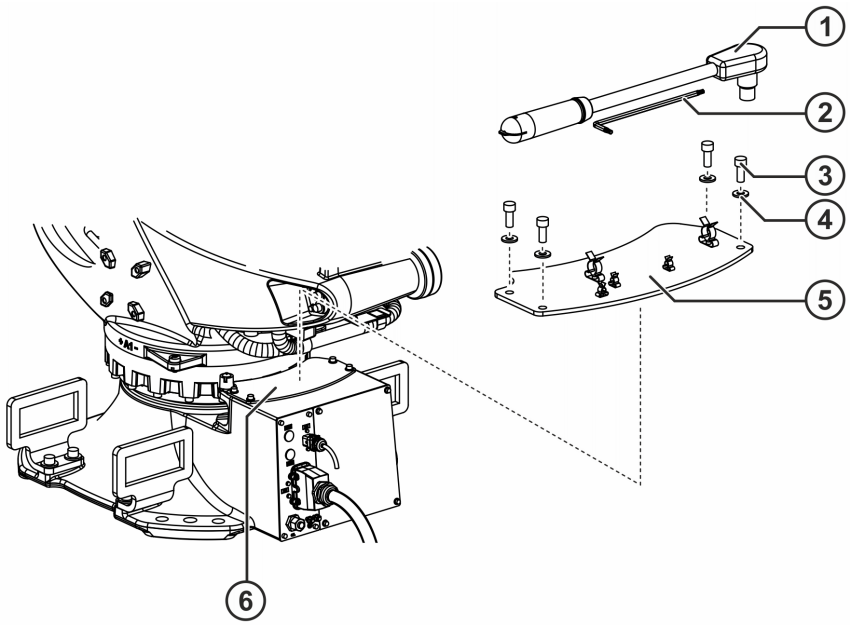

Fig. 11-2: Installing the release device

1 Release device
2 TX25 TORX key wrench
3 M8x20-8.8-A2K Allen screw (4x)
4 Conical spring washer (4x)
5 Clip plate

6 Cover plate

4. Attach the arrow adhesive labels to the cast housing in the vicinity of the respective motors as shown in the illustration (>>> *Fig. 11-3*).

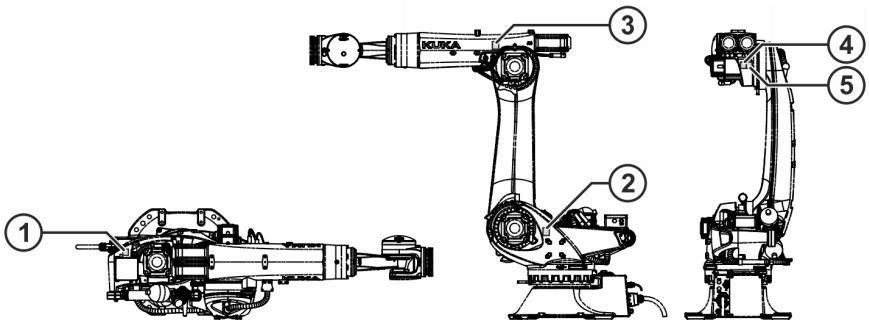

Fig. 11-3: Location of arrow adhesive labels, applicable to KR QUANTEC-2 and KR QUANTEC-2 K

1 Arrow adhesive label A1
2 Arrow adhesive label A2
3 Arrow adhesive label A3
4 Arrow adhesive label A4
5 Arrow adhesive label A5

11.1.1.2 Moving the manipulator without drive energy

Procedure

1. Unscrew 4 M6x20 TORX slotted screws (TX25/slot size 8) and take the cover off the corresponding motor (using a flat-blade screwdriver, if necessary).
2. Push the release device (or combination wrench, size 12 mm) onto the corresponding motor and move the axis in the desired direction.

   It is necessary to overcome the resistance of the mechanical motor brake and any other loads acting on the axis.

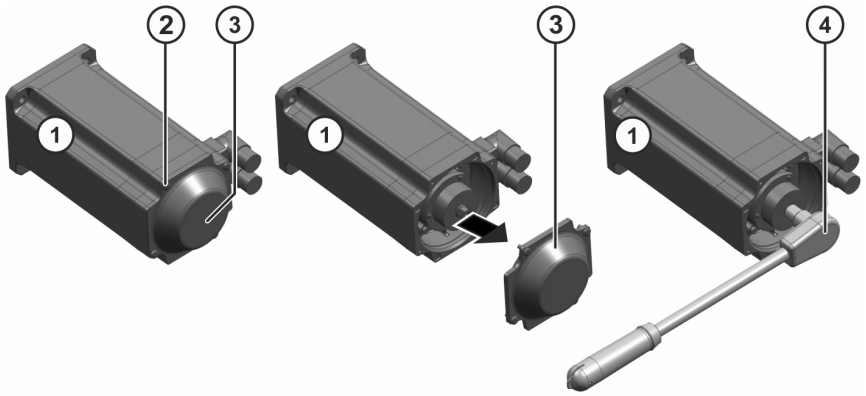

Fig. 11-4: Motor with release device

1 Motor
2 M6x20 TORX screw (TX25/size 8 slot) (4x)
3 Cover
4 Release device

3. Remove any dirt from the motor and cover.
4. Mount the cover on the motor and fit and tighten 4 M6x20 TORX slotted screws (TX25/slot size 8); M_A = 4.5 Nm.

11.1.1.3 Concluding work

The following concluding work must be carried out:

- Master all axes.
- Perform brake test.
- Carry out a test run in T1 mode and look out for irregularities.

11.2 Purge option A

Description

Compressed air preparation system PURGE option A consists of a service unit and a pressure regulator unit. The service unit prepares the compressed air so that it contains no dirt particles, water or chemical contamination. The pressure regulator unit limits the operating pressure of the system and compensates for pressure fluctuations.

A compressed air supply with 1 to 12 bar can be connected to the service unit.

The compressed air preparation system is not suitable for installation in a hygiene area.

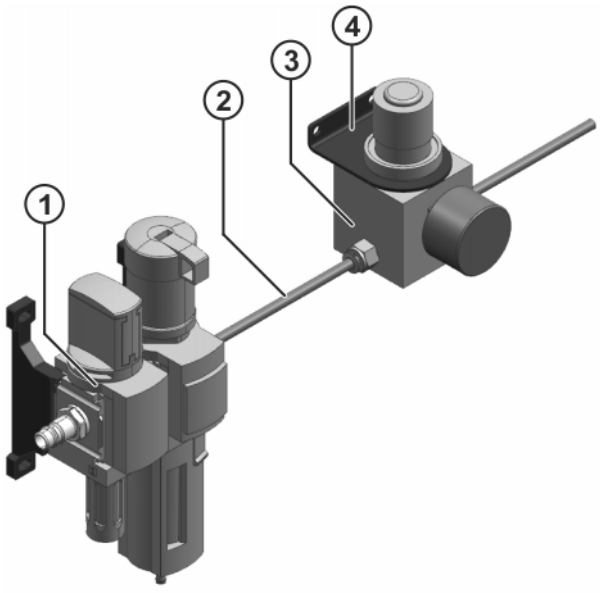

Fig. 11-5: PURGE option A

1	Service unit	3	Pressure regulator unit
2	Compressed air hose	4	Holder

Basic data

Designation	Article number	Weight
PURGE option A	0000-349-078	approx. 5.1 kg

Further information about the ambient conditions is contained in the assembly instructions for the robot and robot controller.

Operating pressure (PURGE)	max. 0.03 MPa (0.3 bar) ±10%
Air consumption	0.1 m^3/h
Air line connection	Push-in fitting for hose, 6 mm
Input pressure	0.1 - 1.2 MPa (1 - 12 bar)
Pressure regulator	0.005 - 0.07 MPa (0.05 - 0.7 bar)
Manometer range	0.0 - 0.1 MPa (0.0 - 1.0 bar)

Maintenance

If used for its intended purpose, the option requires minimal maintenance, i.e. visual inspections are recommended. In certain operating conditions, regular visual inspections may allow timely detection of changes. The nature and scope of the maintenance work depend very much on the specific area of application. This enables early detection of damage, thereby preventing failure of components and assemblies. Exchange damaged components or assemblies.

Disposal

When the option reaches the end of its useful life, it can be removed and disposed of. The materials must be disposed of in accordance with the pertinent regulations and, where possible, separated and sorted for recycling.

11.3 Purge option B

Description

Compressed air preparation system PURGE option B consists of a pressure regulator unit that limits the operating pressure of the system and compensates for pressure fluctuations.

The compressed air preparation system is not suitable for installation in a hygiene area.

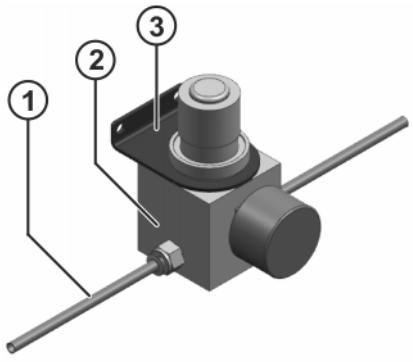

Fig. 11-6: PURGE option B

1 Compressed air hose
2 Pressure regulator unit
3 Holder

Basic data

Designation	Article number	Weight
PURGE option B	0000-349-079	approx. 1.7 kg

Further information about the ambient conditions is contained in the assembly instructions for the robot and robot controller.

Operating pressure (PURGE)	max. 0.03 MPa (0.3 bar) ±10%
Air consumption	0.1 m^3/h
Air line connection	Push-in fitting for hose, 6 mm
Input pressure	0.1 - 1.2 MPa (1 - 12 bar)
Pressure regulator	0.005 - 0.07 MPa (0.05 - 0.7 bar)
Manometer range	0.0 - 0.1 MPa (0.0 - 1.0 bar)

Maintenance

If used for its intended purpose, the option requires minimal maintenance, i.e. visual inspections are recommended. In certain operating conditions, regular visual inspections may allow timely detection of changes. The nature and scope of the maintenance work depend very much on the specific area of application. This enables early detection of damage, thereby preventing failure of components and assemblies. Exchange damaged components or assemblies.

Disposal

When the option reaches the end of its useful life, it can be removed and disposed of. The materials must be disposed of in accordance with the pertinent regulations and, where possible, separated and sorted for recycling.

11.4 Purge option C

Description

The functional principle of compressed air preparation system PURGE option C corresponds to that of PURGE option A. It is additionally equipped with a holder for installation on the base frame. The option consists of a service unit and a pressure regulator unit. The service unit prepares the compressed air so that it contains no dirt particles, water or chemical contamination. The pressure regulator unit limits the operating pressure of the system and compensates for pressure fluctuations.

A compressed air supply with 1 to 12 bar can be connected to the service unit.

The compressed air preparation system is not suitable for installation in a hygiene area.

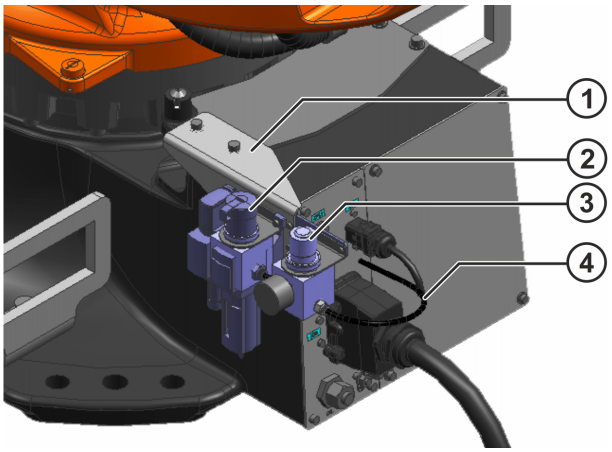

Fig. 11-7: PURGE option C

1	Holder	3	Pressure regulator unit
2	Service unit	4	Compressed air hose

Basic data

Designation	Article number	Weight
PURGE option C	0000-349-102	approx. 5.9 kg

Further information about the ambient conditions is contained in the assembly instructions for the robot and robot controller.

Operating pressure (PURGE)	max. 0.03 MPa (0.3 bar) ±10%
Air consumption	0.1 m^3/h
Air line connection	Push-in fitting for hose, 6 mm
Input pressure	0.1 - 1.2 MPa (1 - 12 bar)
Pressure regulator	0.005 - 0.07 MPa (0.05 - 0.7 bar)
Manometer range	0.0 - 0.1 MPa (0.0 - 1.0 bar)

Start-up and recommissioning

(>>> *11.4.1 "Starting up PURGE option C" Page 379*)

Maintenance

If used for its intended purpose, the option requires minimal maintenance, i.e. visual inspections are recommended. In certain operating conditions, regular visual inspections may allow timely detection of changes. The nature and scope of the maintenance work depend very much on the specific area of application. This enables early detection of damage, thereby preventing failure of components and assemblies. Exchange damaged components or assemblies.

Disposal

When the option reaches the end of its useful life, it can be removed and disposed of. The materials must be disposed of in accordance with the pertinent regulations and, where possible, separated and sorted for recycling.

11.4.1 Starting up PURGE option C

Description

The PURGE option can be used to prepare compressed air for cleaning purposes.

This section describes all work required to put PURGE option C into operation.

Equipment

The following equipment is required:

Designation	Article number
Set of Allen keys 1.5; 2; 2.5; 3; 4; 5; 6; 8; 10 mm	-
Torque wrench 5 Nm to 50 Nm	-

Material

The following material is required:

Designation	Article number	Quantity
PURGE option C	0000-349-102	1

Tightening torques

The tightening torques can be found under: (>>> *12.1 "Tightening torques" Page 385*)

These are valid for screws and nuts where no other specifications are given.

Screws of strength class 10.9 and higher, stainless steel screws of strength class 70 or 80, as well as screws with test certification may only be tightened once with the rated tightening torque. These screws must be replaced with new ones when they are slackened for the first time.

Precondition

- The robot controller is switched off.
- The robot is freely accessible.

Work safety

SAFETY INSTRUCTION

The following procedure must be followed exactly!



WARNING

Use of the option PURGE is limited to cleaning work. Use during running operation is precluded in order to prevent the emission of foreign particles.

11.4.1.1 Installing PURGE option C

Procedure

1. Unscrew the 2 left-hand M8x20-8.8 Allen screws from the cover plate (>>> *Fig. 11-8*).

2. Position the holder on the base frame, insert 2 M8x20-8.8 Allen screws and conical spring washers and tighten them. Increase the tightening torque to the specified value in several stages.
3. Connect compressed air hose to interface A1.

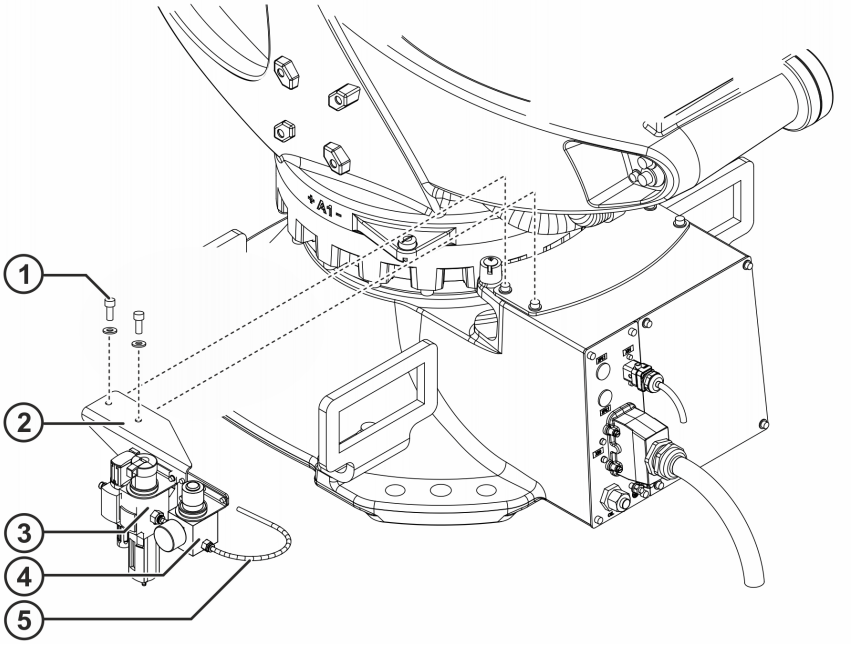

Fig. 11-8: Installing PURGE option C

1 M8x20-8.8-A2K Allen screw (2x) with conical spring washer
2 Holder
3 Service unit
4 Pressure regulator unit
5 Compressed air hose

11.4.1.2 Concluding work

The following concluding work must be carried out:

- Carry out a test run in T1 mode and look out for irregularities.

11.5 Purge option D

Description

The functional principle of compressed air preparation system PURGE option D corresponds to that of PURGE option B. It is additionally equipped with a holder for installation on the base frame. The option consists of a pressure regulator unit that limits the operating pressure of the system and compensates for pressure fluctuations.

The compressed air preparation system is not suitable for installation in a hygiene area.

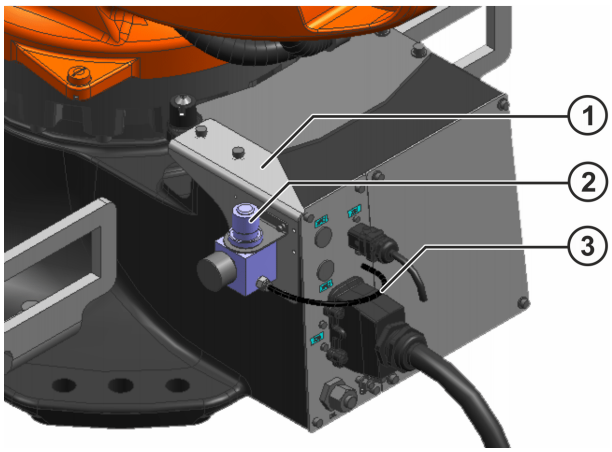

Fig. 11-9: PURGE option D

1 Holder
2 Pressure regulator unit
3 Compressed air hose

Basic data

Designation	Article number	Weight
PURGE option D	0000-349-103	approx. 2.4 kg

Further information about the ambient conditions is contained in the assembly instructions for the robot and robot controller.

Operating pressure (PURGE)	max. 0.03 MPa (0.3 bar) ±10%
Air consumption	0.1 m^3/h
Air line connection	Push-in fitting for hose, 6 mm
Input pressure	0.1 - 1.2 MPa (1 - 12 bar)
Pressure regulator	0.005 - 0.07 MPa (0.05 - 0.7 bar)
Manometer range	0.0 - 0.1 MPa (0.0 - 1.0 bar)

Start-up and recommissioning

(>>> *11.5.1 "Starting up PURGE option D" Page 382*)

Maintenance

If used for its intended purpose, the option requires minimal maintenance, i.e. visual inspections are recommended. In certain operating conditions, regular visual inspections may allow timely detection of changes. The nature and scope of the maintenance work depend very much on the specific area of application. This enables early detection of damage, thereby preventing failure of components and assemblies. Exchange damaged components or assemblies.

Disposal

When the option reaches the end of its useful life, it can be removed and disposed of. The materials must be disposed of in accordance with the pertinent regulations and, where possible, separated and sorted for recycling.

11.5.1 Starting up PURGE option D

Description

The PURGE option can be used to prepare compressed air for cleaning purposes.

This section describes all work required to put PURGE option D into operation.

Equipment

The following equipment is required:

Designation	Article number
Set of Allen keys 1.5; 2; 2.5; 3; 4; 5; 6; 8; 10 mm	-
Torque wrench 5 Nm to 50 Nm	-

Material

The following material is required:

Designation	Article number	Quantity
PURGE option D	0000-349-103	1

Tightening torques

The tightening torques can be found under: (>>> *12.1 "Tightening torques" Page 385*)

These are valid for screws and nuts where no other specifications are given.

Screws of strength class 10.9 and higher, stainless steel screws of strength class 70 or 80, as well as screws with test certification may only be tightened once with the rated tightening torque. These screws must be replaced with new ones when they are slackened for the first time.

Precondition

- The robot controller is switched off.
- The robot is freely accessible.

Work safety

SAFETY INSTRUCTION

The following procedure must be followed exactly!



WARNING

Use of the option PURGE is limited to cleaning work. Use during running operation is precluded in order to prevent the emission of foreign particles.

11.5.1.1 Installing PURGE option D

Procedure

1. Unscrew the 2 left-hand M8x20-8.8 Allen screws from the cover plate (>>> *Fig. 11-10*).

2. Position the holder on the base frame, insert 2 M8x20-8.8 Allen screws and conical spring washers and tighten them. Increase the tightening torque to the specified value in several stages.
3. Connect compressed air hose to interface A1.

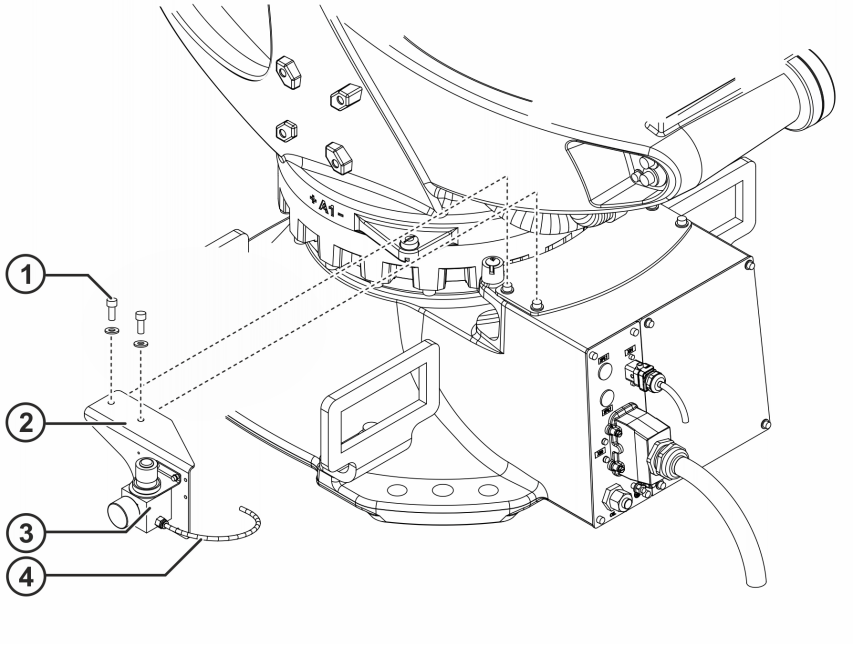

Fig. 11-10: Installing PURGE option D

1 M8x20-8.8-A2K Allen screw (2x) with conical spring washer
2 Holder
3 Pressure regulator unit
4 Compressed air hose

11.5.1.2 Concluding work

The following concluding work must be carried out:

- Carry out a test run in T1 mode and look out for irregularities.

12 Appendix

12.1 Tightening torques

Tightening torques

The following tightening torques (Nm) are valid for screws and nuts where no other specifications are given.

The specified values apply to lightly oiled black (e.g. phosphated) and coated (e.g. mech. galv., zinc flake plating, screw locking elements) screws and nuts.

	Strength class		
Thread	**8.8**	**10.9**	**12.9**
M1.6	0.17 Nm	0.24 Nm	0.28 Nm
M2	0.35 Nm	0.48 Nm	0.56 Nm
M2.5	0.68 Nm	0.93 Nm	1.10 Nm
M3	1.2 Nm	1.6 Nm	2.0 Nm
M4	2.8 Nm	3.8 Nm	4.4 Nm
M5	5.6 Nm	7.5 Nm	9.0 Nm
M6	9.5 Nm	12.5 Nm	15.0 Nm
M8	23.0 Nm	31.0 Nm	36.0 Nm
M10	45.0 Nm	60.0 Nm	70.0 Nm
M12	78.0 Nm	104.0 Nm	125.0 Nm
M14	125.0 Nm	165.0 Nm	195.0 Nm
M16	195.0 Nm	250.0 Nm	305.0 Nm
M20	370.0 Nm	500.0 Nm	600.0 Nm
M24	640.0 Nm	860.0 Nm	1030.0 Nm
M30	1330.0 Nm	1700.0 Nm	2000.0 Nm

	Strength class	
Thread	**8.8 ISO7991 Allen screw**	**10.9 ISO7380, ISO07381 Fillister head screw**
M3	0.8 Nm	0.8 Nm
M4	1.9 Nm	1.9 Nm
M5	3.8 Nm	3.8 Nm

	Strength class
Thread	**10.9 DIN7984 Pan head screws**
M4	2.8 Nm

Tighten M5 domed cap nuts with a torque of 4.2 Nm.

12.2 Auxiliary substances and consumables used

Product designation / Article number	Use	Manufacturer designation / Address
Castrol Hyspin ZZ 46 0083-236-203	Hydraulic oil	**Deutsche Castrol Vertriebsgesellschaft mbH** Max-Born-Str. 2 D-22761 Hamburg Germany
Drei Bond type 1305 0000-184-175	Adhesive and sealant	**Drei Bond GmbH** Carl-Zeiss-Ring 13 D-85737 Ismaning Germany
Drei Bond type 1342 0000-184-174	Adhesive and sealant	**Drei Bond GmbH** Carl-Zeiss-Ring 13 D-85737 Ismaning Germany
Drei Bond type 1354 0000-435-051	Surface sealant	**Drei Bond GmbH** Carl-Zeiss-Ring 13 D-85737 Ismaning Germany
Drei Bond type 5204HV 0000-251-505	Adhesive and sealant	**Drei Bond GmbH** Carl-Zeiss-Ring 13 D-85737 Ismaning Germany
LGEP 2 0000-119-990	Lubricating grease	**SKF Maintenance Products** Postboks 1008 NL-3430 BA Nieuwegein Netherlands
MARCOL 82 0000-386-390	Lubricant	**ExxonMobil Petroleum & Chemical BVBA** POLDERDIJKWEG B-2030 Antwerp Belgium
Microlube GL 261 0000-135-463	Lubricating grease	**Klüber Lubrication München KG** Geisenhausenerstr. 7 D-81379 Munich Germany

Optigear Synt. ALR 150_EEA 0000-362-835 for European Economic Area **Optigear Synt. ALR 150_AM1** 0000-361-461 for USA, Canada, Mexico, Chile, Peru **Optigear Synt. ALR 150_CHN** 0000-361-473 for China **Optigear Synt. ALR 150_APeC1** 0000-361-476 for India, Taiwan, Japan, Thailand, South Korea, Malaysia Article numbers for further regions can be found in KUKA Xpert.	Gear oil	**BP Europa SE** Geschäftsbereich Industrieschmierstoffe Erkelenzer Strasse 20 D-41179 Mönchengladbach Germany
Optitemp RB 2 0000-101-456	Lubricating grease	**Deutsche BP Aktiengesellschaft - Industrial Lubricants & Services** Erkelenzer Strasse 20 D-41179 Mönchengladbach Germany
PETAMO GHY 133 N 0000-269-159	Lubricating grease	**Klüber Lubrication München KG** Geisenhausenerstr. 7 D-81379 Munich Germany

To ensure safe use of our products, we recommend regularly requesting up-to-date safety data sheets from the manufacturers of auxiliary and operating materials.

12.3 Product safety data sheet

Section 1: Designation of the product and of the company

- Product identifier:
  - Trade name:
    KUKA industrial robot with hydropneumatic counterbalancing system
- Relevant identified use of the product that is advised against:
  "*Intended use and misuse*" section of the assembly instructions.
- Use of the product:
  "*Intended use and misuse*" section of the assembly instructions.
- Details of the supplier providing the product safety data sheet:

Manufacturer/supplier:	KUKA Deutschland GmbH
Address:	Zugspitzstrasse 140
Postal code:	86165 Augsburg
Country:	Germany
Phone:	+49 821 797 4000
Fax:	+49 821 797 40400
e-mail	info@kuka.com
Department for information:	KUKA Deutschland GmbH Quality Assurance department Phone: +49 821 797 1747 e-mail: DG-Management@kuka.com
Information in case of emergency:	During normal operating hours Phone: +49 821 797 1747

There is no legal obligation to create a safety data sheet for a product. In order to make information typically contained in a safety data sheet available for products, however, the present product safety data sheet was created.
Your attention is expressly drawn to the fact that the product safety data sheet for products is an information sheet created voluntarily that is not subject to the formal requirements of Regulation (EC) No. 1907/2006 (REACH Regulation).

Section 2: Possible hazards

- Classification of the product:
  - Classification acc. to Regulation (EC) No. 1272/2008 (CLP Regulation):
    This product is not classified according to the CLP Regulation.
- Label elements

Labeling acc. to Regulation (EC) No. 1272/2008 (CLP Regulation):	Not applicable
Hazard symbol:	Not applicable
Signal word:	Not applicable
Hazard statements:	Not applicable

- Other hazards
  - Results of PBT and vPvB assessment

PBT	Not applicable
vPvB	Not applicable

Section 3

Composition / information about the components

- Chemical characterization:
  Product
  - Description:

Industrial robot

- Hazardous components:

  The industrial robot contains a hydropneumatic counterbalancing system filled with hydraulic oil of type HLP 46 as well as **Nitrogen, compressed**.

CAS: 7727-37-9 EINECS: 231-783-9	Nitrogen	Press. gas, H280 

The exact wording of the hazard statements listed above can be found in section 16 (>>> *"Section 16" Page 393*).

Detailed information about the amount of nitrogen contained is available in the respective product information at https://xpert.kuka.com.

Section 4

First aid measures

- Description of first aid measures:
  - General information:

    No special measures required.
- Most important symptoms and effects, both acute and delayed:

  No further relevant information available.
- Indication of any immediate medical attention and special treatment needed:

  No further relevant information available.

Section 5

Fire-fighting measures

- Extinguishing agents:

Suitable extinguishing agents:	Adjust the fire-extinguishing measures to suit the environment.

- Special hazards arising from the substance or mixture:

  No further relevant information available.
- Advice for firefighters:
  - Special protective equipment:

    No special measures required.

Section 6

Measures after unintended release

- Personal precautions, protective equipment and emergency procedures:

  Not required
- Environmental protection measures:

  No special measures required.
- Methods and material for containment and cleaning up:

  No special measures required.

- Reference to other sections

  For information on safe handling, see section 7 (>>> "Section 7" Page 390).

  For information on personal protective equipment, see section 8 (>>> "Section 8" Page 390).

  For information on disposal, see section 13 (>>> "Section 13" Page 392).

Section 7

Handling and storage

- Precautions for safe handling:

  No special measures required.
- Instructions relating to fire and explosion protection:

  No special measures required.
- Conditions for safe storage, including any incompatibilities:
  - Storage

Requirements regarding storage rooms and containers:	No special requirements
Information on storage with other products:	Not required
Further specifications concerning storage conditions:	None

- Specific end uses:

  No further relevant information available.

Section 8

Limitation and monitoring of exposure / Personal protective equipment

- Additional information for the design of technical systems:

  No further information.
- Control parameters

  Components with applicable occupational exposure limit values:

  The product contains no relevant amounts of materials that are subject to monitoring of limit values in the workplace.
- Limitation and monitoring of exposure:
  - Personal protective equipment:

Respiratory protection:	Not required
Hand protection:	Chemical protective gloves are not required.
Eye protection:	Not required

Section 9

Physical and chemical properties

- Information on basic physical and chemical properties:

– General information

Form:	Solid
Color:	As per product description
Odor:	Odorless
Melting point/range:	Not determined
Flash point:	Not applicable
Auto-ignition:	The product does not auto-ignite.
Risk of explosion:	The product presents no danger of explosion.
Density:	Not determined
Solubility/miscibility in water:	Insoluble
Additional information:	No further information available.

Section 10

Stability and reactivity

- Possibility of hazardous reactions:
  No hazardous reactions known.
- Conditions to be avoided
  No relevant information available.
- Incompatible materials
  No further relevant information available.
- Hazardous decomposition products
  No hazardous decomposition products known.

Section 11

Toxicological information

- Information on toxicological effects:
  – Acute toxicity:

Primary irritation effect on skin:	No irritation
Primary irritation effect on eyes:	No irritation
Sensitization:	No sensitizing effect known.
Additional toxicological information:	The product is not subject to labeling obligations.

Section 12

Ecological information

- Toxicity:
  Aquatic toxicity: No further relevant information available.
- Persistence and degradability:
  No further relevant information available.
- Bioaccumulative potential:
  No further relevant information available.

- Mobility in soil:
  No further relevant information available.
- Additional ecological information:
  General information: No known hazard to water.
- Results of PBT and vPvB assessment:

PBT	Not applicable
vPvB	Not applicable

- Other adverse effects:
  No further relevant information available.

Section 13

Disposal information

- Waste treatment methods:
  Disposal section of the assembly instructions.
- Contaminated packaging:
  Disposal in accordance with the applicable local regulations.

Section 14

Transport information

- UN number
  - UN 3164
- UN proper shipping name:
  - ADR, RID, ADN:
    ARTICLES UNDER HYDRAULIC PRESSURE (containing non-flammable gas)
  - IMDG code, IATA:
    ARTICLES, PRESSURIZED, HYDRAULIC (containing non-flammable gas)
- Transport hazard classes:
  - ADR, RID, ADN:

Class:	2.2 Non-flammable, non-toxic gases
Hazard label:	Not applicable
Shipping:	Not subject to regulations (special regulation 594)

  - IMDG code:



Class:	2.2 Non-flammable, non-toxic gas
Hazard label:	2.2
Marine pollutants:	No
EmS number:	F-C, S-V

Shipping:	P003, PP32

– IATA:

Class:	2.2 Non-flammable, non-toxic gas
Hazard label:	Not applicable
Shipping:	Packaging instructions 208 (a)

- Packaging group:
  Not applicable
- UN “Model Regulation”:
  UN 3164 ARTICLES, PRESSURIZED, HYDRAULIC, 2.2

Detailed information about the amount of nitrogen contained is available in the respective product information at https://xpert.kuka.com.
Industrial robots with counterbalancing systems that are not filled with nitrogen are not subject to the regulations on dangerous goods!

Section 15

Regulatory information

- Chemical safety assessment:
  Chemical safety assessment has not been performed.

Section 16

Other information

The information given is based on our present knowledge. However, this shall not constitute a guarantee for any specific product characteristics and shall not establish a legally valid contractual relationship.

- Relevant phrases:
  H280: Contains gas under pressure; may explode if heated.

12.4 Applied standards and regulations

Name/Edition	Definition
2006/42/EC	**Machinery Directive:** Directive 2006/42/EC of the European Parliament and of the Council of 17 May 2006 on machinery, and amending Directive 95/16/EC (recast)
2014/30/EU	**EMC Directive:** Directive 2014/30/EU of the European Parliament and of the Council dated 26 February 2014 on the approximation of the laws of the Member States concerning electromagnetic compatibility
2014/68/EU	**Pressure Equipment Directive**: Directive 2014/68/EU of the European Parliament and of the Council dated 15 May 2014 on the approximation of the laws of the Member States concerning pressure equipment (Only applicable for robots with hydropneumatic counterbalancing system.)
ANSI/RIA R15.06-2012	**Industrial Robots and Robot System**

EN 60204-1:2018	**Safety of machinery:** Electrical equipment of machines – Part 1: General requirements
EN 61000-6-2:2005	**Electromagnetic compatibility (EMC):** Part 6-2: Generic standards; Immunity for industrial environments
EN 61000-6-4:2007 + A1:2011	**Electromagnetic compatibility (EMC):** Part 6-4: Generic standards; Emission standard for industrial environments
EN 614-1:2006+A1:2009	**Safety of machinery:** Ergonomic design principles - Part 1: Terms and general principles
EN IEC 61000-6-2:2019	**Electromagnetic compatibility (EMC):** Part 6-2: Generic standards – Immunity for industrial environments
EN IEC 61000-6-4:2019	**Electromagnetic compatibility (EMC):** Part 6-4: Generic standards; Emission standard for industrial environments
EN ISO 10218-1:2011	**Robots and robotic devices – Safety requirements for industrial robots:** Part 1: Robots
EN ISO 12100:2010	**Safety of machinery:** General principles of design, risk assessment and risk reduction
EN ISO 13849-1:2015	**Safety of machinery:** Safety-related parts of control systems - Part 1: General principles of design
EN ISO 13849-2:2012	**Safety of machinery:** Safety-related parts of control systems - Part 2: Validation
EN ISO 13850:2015	**Safety of machinery:** Emergency stop - Principles for design

13 KUKA Service

13.1 Requesting support

Introduction

This documentation provides information on operation and operator control, and provides assistance with troubleshooting. For further support, please contact your local subsidiary.

Information

The following information is required for processing a support request:

- Description of the problem, including information about the duration and frequency of the fault
- The greatest possible amount of information about the hardware and software components of the overall system

  The following list gives an indication of the information which is relevant in many cases:

  – Model and serial number of the kinematic system, e.g. the manipulator
  – Model and serial number of the controller
  – Model and serial number of the energy supply system
  – Designation and version of the system software
  – Designations and versions of other software components or modifications
  – System software diagnosis package

    Additionally for KUKA Sunrise: Existing projects including applications

    For versions of KUKA System Software older than V8: Archive of the software (Diagnosis package is not yet available here.)
  – Application used
  – External axes used

13.2 KUKA Customer Support

The contact details of the local subsidiaries can be found at:
www.kuka.com/customer-service-contacts

Index

2006/42/EC....393
2014/30/EU....393
2014/68/EU....393
95/16/EC....393

A

Accessories....19
Angle of rotation....11
ANSI/RIA R15.06-2012....393
Appendix....385
Arctic....10
Arm....17
Automatic mode....30
Auxiliary substances used....386
Axis data, KR 120 R3500-2 P....36
Axis data, KR 120 R3500-2 P-C....47
Axis data, KR 120 R3900-2 K....58
Axis data, KR 180 R3500-2 K....69
Axis data, KR 180 R3500-2 K-F....81
Axis data, KR 210 R3300-2 K....92
Axis data, KR 210 R3300-2 K-F....105
Axis data, KR 270 R3100-2 K....117
Axis data, KR 270 R3100-2 K-F....130
Axis limitation, mechanical....24
Axis range....10, 20

B

Base frame....17
Basic data, KR 120 R3500-2 P....34
Basic data, KR 120 R3500-2 P-C....46
Basic data, KR 120 R3900-2 K....57
Basic data, KR 180 R3500-2 K....68
Basic data, KR 180 R3500-2 K-F....79
Basic data, KR 210 R3300-2 K....91
Basic data, KR 210 R3300-2 K-F....103
Basic data, KR 270 R3100-2 K....116
Basic data, KR 270 R3100-2 K-F....128
Brake defect....25
Brake release device....24
Braking distance....10, 20

C

C....10
Castrol Hyspin ZZ 46....386
CE mark....20
Center of gravity....189
Center of mass 39, 50, 61, 72, 84, 95, 108, 120, 133
Clean Room....10
Cleaning the robot....267
Cleaning work....31
Connecting cable, standard....210, 214
Connecting cables.. 19, 35, 36, 47, 58, 69, 80, 81, 92, 104, 105, 117, 129, 130, 185
Connecting shafts, exchanging....340
Consumables used....386
Counterbalancing system....17, 31
Counterbalancing system, checking...247, 248, 258, 266
Counterbalancing system, hydropneumatic...17
Counterbalancing system, installing....254
Counterbalancing system, installing, ceiling-mounted robot....263
Counterbalancing system, removal, ceiling-mounted robot....261
Counterbalancing system, removing, floor-mounted robot....251
CR....10

D

Danger zone....11, 21
Declaration of conformity....20
Declaration of incorporation....19, 20
Decommissioning....32, 363
Description of the robot system....15
Diagnosis package....395
Dimensions, transportation....189
Directives....393
Disclaimer....19
Disposal....32, 363, 369
Documentation, industrial robot....9
Drei Bond type 1305....386
Drei Bond type 1342....386
Drei Bond type 1354....386
Drei Bond type 5204HV....386

E

EC declaration of conformity....20
EDS....10
EDS cool....10
Electrical installations....17, 351
Electromagnetic compatibility (EMC)....394
Electromagnetic compatibility (EMC):....394
EMC Directive....20, 393
EMD....11
EN 60204-1:2018....394
EN 61000-6-2:2005....394
EN 61000-6-4:2007 + A1:2011....394
EN 61000-6-4:2019....394
EN 614-1:2006+A1:2009....394
EN IEC 61000-6-2:2019....394
EN ISO 10218-1:2011....394
EN ISO 12100:2010....394
EN ISO 13849-1:2015....394
EN ISO 13849-2:2012....394
EN ISO 13850:2015....394
Equipment securing the link arm, removing....257, 265, 281
Equipment securing the robot arm, removing....291
EX....11
Extension....10
External axes....19

External axis....13, 22

F

F....11
F exclusive....11
Faults....27
Flange loads..42, 53, 64, 75, 87, 98, 111, 123, 136
Fork lift truck....190
Foundation loads, KR 120 R3500-2 P....44
Foundation loads, KR 120 R3500-2 P-C....55
Foundation loads, KR 120 R3900-2 K....66
Foundation loads, KR 180 R3500-2 K....77
Foundation loads, KR 180 R3500-2 K-F....89
Foundation loads, KR 210 R3300-2 K....101
Foundation loads, KR 210 R3300-2 K-F....114
Foundation loads, KR 270 R3100-2 K....126
Foundation loads, KR 270 R3100-2 K-F....139
Foundry robots....79, 103, 128
Foundry, equipment....79, 103, 128
Function test....28

G

Gear oil A1, draining....225, 228
Gear unit A1, filling with oil....226, 229
Gear unit A2, draining oil....232
Gear unit A2, filling with oil....233
Gear unit A3, draining oil....236
Gear unit A3, filling with oil....237
Gear unit A4, draining oil....240
Gear unit A4, filling with oil....241
Gear unit A5/A6, draining oil....244, 246
General safety measures....25
Ground conductor....213, 217

H

HA....11
Handling equipment....191, 197, 202, 206
Hazardous substances....32
HI....11
HM....11
HO....11
HP....11
HW....11

I

In-line wrist....16
Industrial robot....19
Industrial Robots and Robot System....393
Information for planning....177
Interface A1....186
Interface, connecting cables....210, 213
Interface, energy supply system....187
Interfaces....185
Introduction....9

K

K....11
KCP....11, 21, 26
Keyboard, external....26
KR....11
KR C....11
KS....11
KUKA Customer Support....395
KUKA Service....395
KUKA smartPAD....11, 21
KUKA smartPAD-2....11, 21

L

Labeling....25
LGEP 2....386
Lifting tackle....191
Lifting tackle (optional)....190
Linear unit....19
Link arm....17
Link arm, securing....251, 260, 277
Low Voltage Directive....20

M

Machine frame mounting....183
Machinery Directive....20, 393
Main axes....145
Maintenance....30, 219
Maintenance symbols....220
Manipulator....11, 16, 19, 21
Manual mode....29
MARCOL 82....386
Mass....39, 50, 61, 72, 84, 95, 108, 120, 133
Mass moments of inertia....40, 51, 62, 73, 85, 96, 109, 121, 134
Material designation....369
Mechanical end stops....23
MEMD....11
micro RDC....11
Microlube GL 261....386
Misuse....18
Motion velocity....12
Motor A1, exchanging....269
Motor A1, installing....273
Motor A1, removing....272
Motor A2, exchanging....275
Motor A3, exchanging....282
Motor A3, installing....289
Motor A3, removing....286
Motor A4, exchanging....292
Motor A4, installing....298, 323, 338, 349
Motor A4, removing....295, 311, 328, 343
Motor A5, exchanging....300
Motor A5, installing....306, 321, 336, 347
Motor A5, removing....303, 313, 329, 345
Motor A6, exchanging....308
Motor A6, installing....318, 334
Motor A6, removing....317, 333

Mounting base with centering..... 177, 180
Mounting flange....16, 41, 52, 63, 74, 86, 97, 110, 122, 135
Mouse, external.....26
MT.....11

N

New in-line wrist, preparing..... 333
New motor A4 - A5, preparing for installation..... 297, 305
New motor, preparing for installation.....317

O

Oil change, A1.....223
Oil change, A1, ceiling-mounted robot.....227
Oil change, A2.....230
Oil change, A3.....234
Oil change, A4.....238
Oil change, A5.....242
Oil temperatures.....220
Operators.....23
Optigear Synt. ALR 150.....387
Options.....17, 19, 371
Optitemp RB 2.....387
Overload..... 25

P

P.....11
PA.....11
Payload diagram...40, 51, 62, 73, 85, 96, 109, 121, 134
Payloads, KR 120 R3500-2 P..... 39
Payloads, KR 120 R3500-2 P-C..... 50
Payloads, KR 120 R3900-2 K..... 61
Payloads, KR 180 R3500-2 K..... 72
Payloads, KR 180 R3500-2 K-F.....84
Payloads, KR 210 R3300-2 K..... 95
Payloads, KR 210 R3300-2 K-F.....108
Payloads, KR 270 R3100-2 K..... 120
Payloads, KR 270 R3100-2 K-F.....133
Personal protective equipment..... 22
Personnel.....22
PETAMO GHY 133 N..... 387
Phi..... 11
Planning.....177
Plant integrator..... 21
Plates and labels.....141
Positioner..... 19
POV..... 12
PPE.....22
Preparing for storage..... 368
Pressure Equipment Directive.....17, 31, 393
Pressure regulator..... 79, 103, 128
Preventive maintenance work.....31
Product description.....15
Product safety data sheet.....387
Program override.....12
Protective circuit..... 17
Protective equipment, overview..... 23
Purge
Option A..... 375
Option B..... 376
Option C..... 377
Option D..... 380
PURGE option C
Start-up..... 379
PURGE option D
Start-up..... 382

R

RDC..... 12
RDC cool..... 12
Reaction distance.....10, 20
Recommissioning..... 27, 195
Refilling quantity. 224, 227, 231, 235, 239, 243
Regulations.....393
Release device.....24, 371
Start-up..... 372
Repair.....30, 269
Robot arm, securing.....285
Robot controller..... 19
Robot, removing..... 363
Rotating column.....17

S

Safety.....19
Safety instructions..... 9
Safety of machinery..... 394
Safety zone..... 21, 23
Safety, general.....19
SC..... 12
SE..... 12
Securing loads.....192
Service life.....21
SI.....12
SL.....12
smartPAD..... 12, 21, 26
Software.....19
Spare parts....250, 259, 270, 276, 283, 293, 301, 309, 326, 341
SPP..... 11
Standards.....393
Start-up.....27, 195
Start-up, floor-mounted robots (mounting base).....195
Start-up, floor-mounted robots (optional 150 mm mounting base).....200
Starting up robots (machine frame mounting).....205
STOP 0.....145
STOP 1.....145
Stop categories..... 12, 21
Stop signal.....145
Stopping distance..... 10, 20, 145

Stopping distances....145, 146, 153, 158, 164, 170
Stopping time.....145
Stopping times... 145, 146, 153, 158, 164, 170
Storage.....32, 363, 365
Supplementary load....43, 54, 65, 76, 88, 99, 112, 124, 137
Support request.....395
System integrator..... 20–22

T

T1 (operating mode)..... 12, 21
T2 (operating mode)..... 12, 21
Teach pendant.....19
Technical data.....33
Technical data, KR 120 R3500-2 P.....34
Technical data, KR 120 R3500-2 P-C.....46
Technical data, KR 120 R3900-2 K.....57
Technical data, KR 180 R3500-2 K.....68
Technical data, KR 180 R3500-2 K-F..... 79
Technical data, KR 210 R3300-2 K.....91
Technical data, KR 210 R3300-2 K-F..... 103
Technical data, KR 270 R3100-2 K.....116
Technical data, KR 270 R3100-2 K-F..... 128
Technical data, overview.....33
Terms used.....10
Terms, safety..... 20
Tightening torques.....385
Training..... 9, 219, 269
Transport position.....189
Transport safeguard..... 192
Transportation..... 27, 189
Transportation by fork lift truck.....191
Transportation with lifting tackle..... 191
Turn-tilt table.....19

U

Use
  Intended.....18
User.....20, 22
Users.....9

W

W.....12
Warnings.....9
Wiring diagrams, electrical installations.....353
Workspace..... 10, 20, 23
WP..... 12