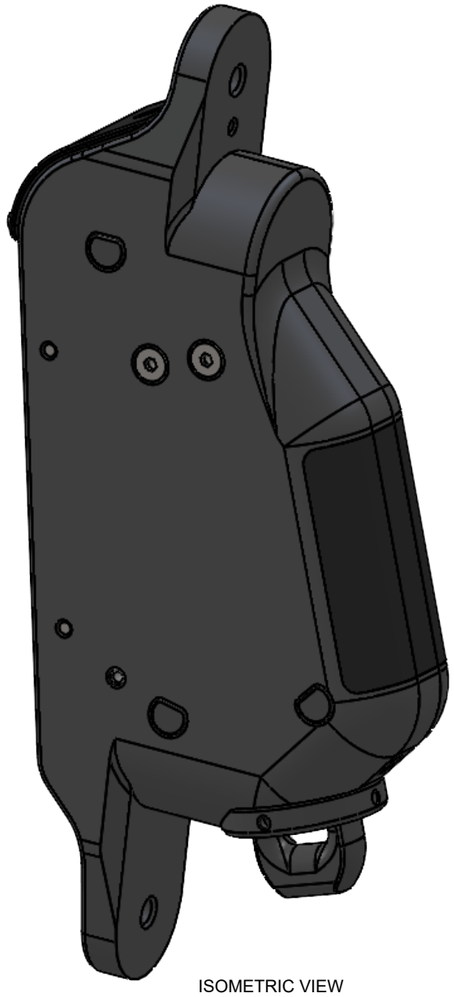

ISOMETRIC VIEW
SCALE 1:2

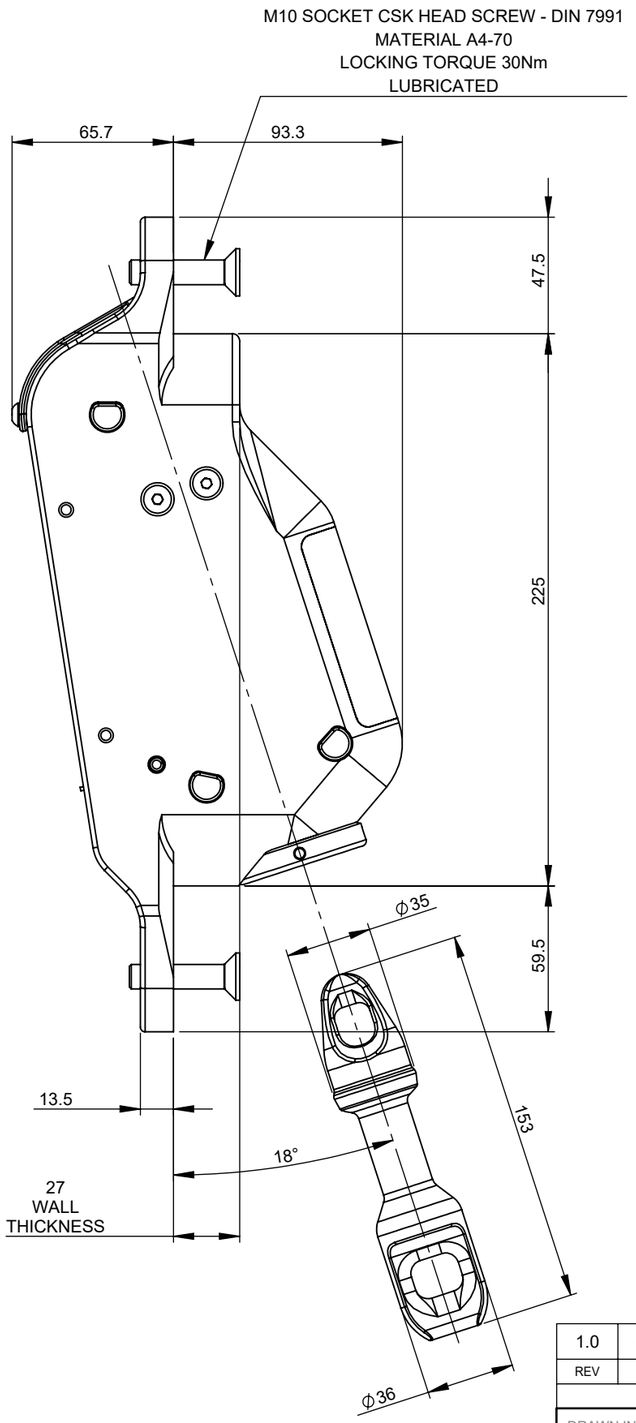

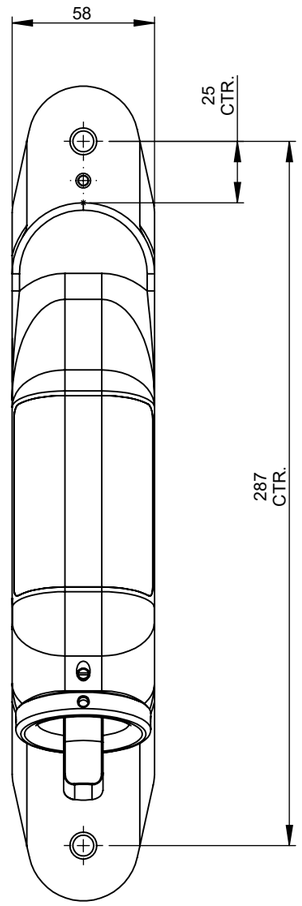

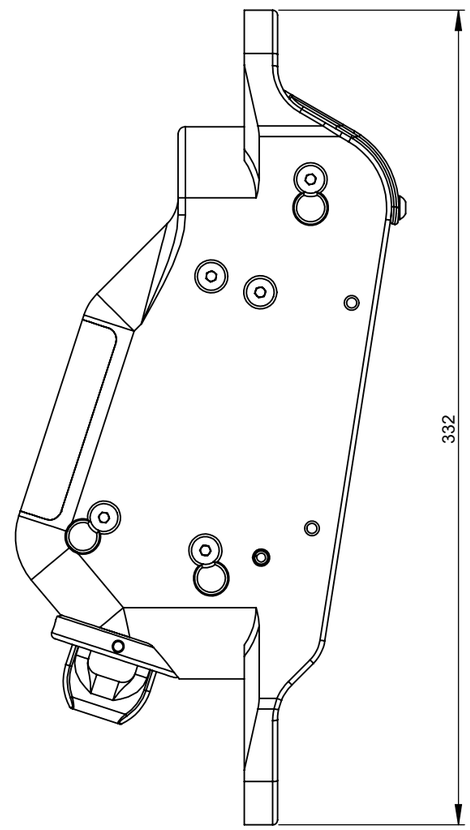

LOCKED
CONFIGURATION

CUSTOMER DRAWING
MAX WORKING LOAD = 10T
WEIGHT = 2.79kgs INCLUDING BAYONET (0.32kgs)
MAX SPLICE DIAMETER HALYARD = 11mm
MAX SPLICE DIAMETER HEAD = 16mm

REV	DATE	DESCRIPTION	DRAWN	APPROVED
1.0	07/03/2022	FIRST PRODUCTION REVISION	AD	AD

REVISIONS

DRAWN IN THIRD ANGLE PROJECTION

DO NOT SCALE DRAWING IF IN DOUBT ASK !

ALL DIMENSIONS IN mm TOLERANCES STANDARD ISO DIN 2768

JOB NUMBER	RP1247		
DESCRIPTION	10T BAYONET AUTO LOCK		
MATERIAL: SEE TABLE	MASS (kgs): 2.79	DRAWN BY: ANTOINE DELAPERRIERE	
FINISH: -	SCALE: 2:5	PRINT SIZE: A3	SHEETS: 3 of 3

Rigging Projects

E: info@riggingnews.com
W: www.riggingnews.com | W: www.riggingnewsprojects.com

THIS DRAWING IS THE PROPERTY OF RIGGING PROJECTS AND MUST NOT BE REPRODUCED OR USED FOR ANY PURPOSE, OTHER THAN IN CONJUNCTION WITH THE PROJECT OR DESIGN FOR WHICH IT WAS DRAWN, WITHOUT RIGGING PROJECTS' PRIOR WRITTEN CONSENT. COPYRIGHT - ©RIGGING PROJECTS