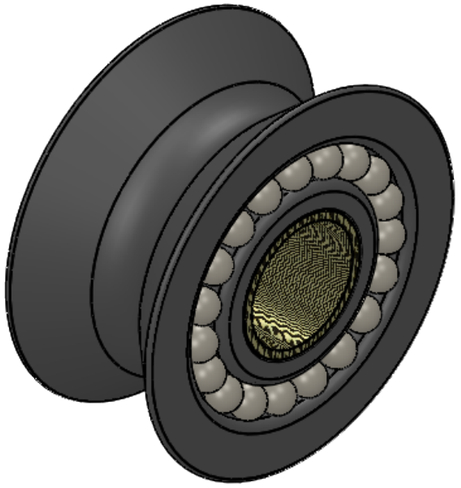

ISOMETRIC VIEW
SCALE 2:3

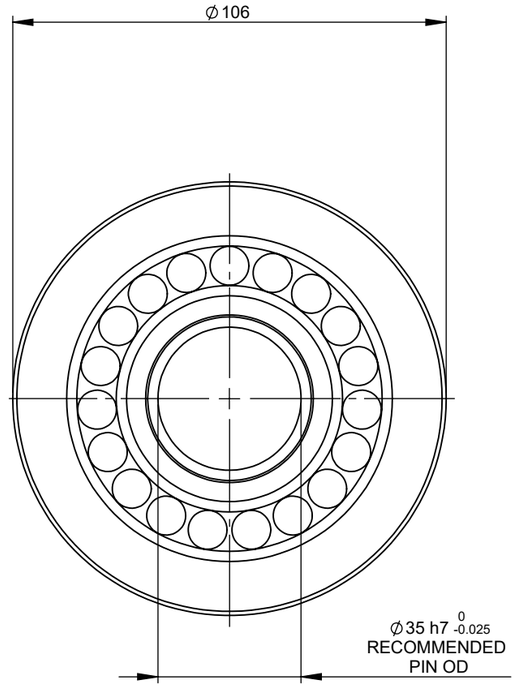

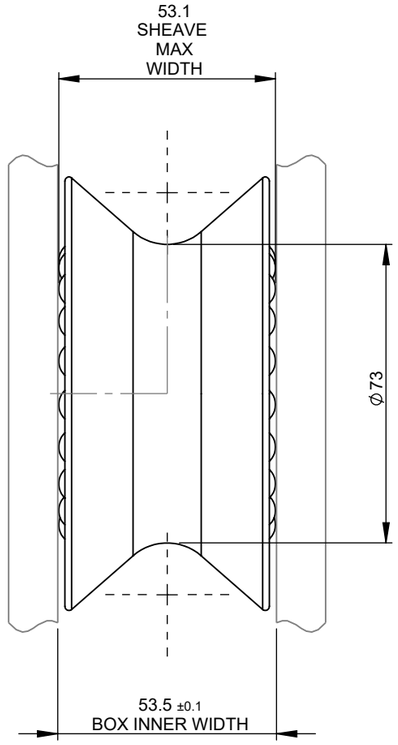

MWL	T	10
Max Line Diameter	mm	20
Max Deflection Angle	deg	+/-13.5
Sheave OD	mm	106
Sheave Running Diameter	mm	73
Sheave Width Max	mm	53.1
Bearing Type		Plain Bearing
Bearing Size		35 x 40
Pin Diameter (h7)	mm	35
Box Inner Width (+/-0.1)	mm	53.5

REV	DATE	DESCRIPTION	DRAWN	APPROVED
1.0	19/05/2023	FIRST PRODUCTION REVISION	TA	AD

REVISIONS

DRAWN IN THIRD ANGLE PROJECTION

DO NOT SCALE DRAWING IF IN DOUBT ASK !

ALL DIMENSIONS IN mm TOLERANCES STANDARD ISO DIN 2768 mK

JOB NUMBER: RP3861

DESCRIPTION: 10T SHEAVE W - OD106.0 W53.1 P35.0

MATERIAL: Al 6082-T6

MASS (kgs): 0.62

DRAWN BY: THOMAS ALLEN

FINISH: BLACK HARD ANODISE ALL OVER 45~50um

SCALE: 2:3

PRINT SIZE: A3

SHEETS: 1 of 1

Rigging Projects

E: info@riggingnews.com
W: www.riggingnews.com | W: www.riggingnewsprojects.com

THIS DRAWING IS THE PROPERTY OF RIGGING PROJECTS AND MUST NOT BE REPRODUCED OR USED FOR ANY PURPOSE, OTHER THAN IN CONJUNCTION WITH THE PROJECT OR DESIGN FOR WHICH IT WAS DRAWN, WITHOUT RIGGING PROJECTS' PRIOR WRITTEN CONSENT. COPYRIGHT - ©RIGGING PROJECTS