Wiring Diagram for Multiple Track Call Buttons – Newer BLACK Interface Board
(Integration with Slot Car Corner Track Wiring Kit)

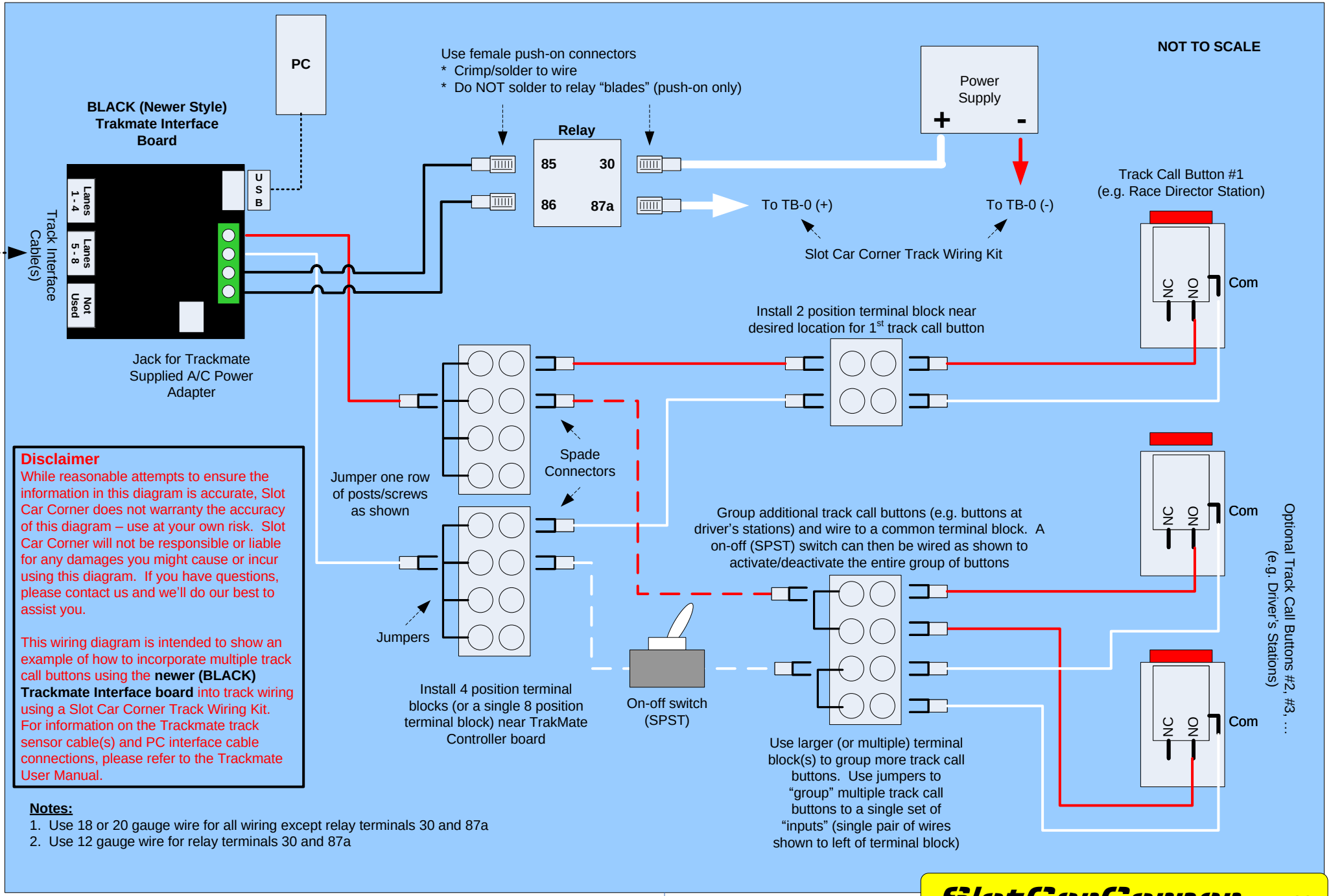

Disclaimer

While reasonable attempts to ensure the information in this diagram is accurate, Slot Car Corner does not warranty the accuracy of this diagram – use at your own risk. Slot Car Corner will not be responsible or liable for any damages you might cause or incur using this diagram. If you have questions, please contact us and we'll do our best to assist you.

This wiring diagram is intended to show an example of how to incorporate multiple track call buttons using the **newer (BLACK) Trackmate Interface board** into track wiring using a Slot Car Corner Track Wiring Kit. For information on the Trackmate track sensor cable(s) and PC interface cable connections, please refer to the Trackmate User Manual.

Notes:

1. Use 18 or 20 gauge wire for all wiring except relay terminals 30 and 87a
2. Use 12 gauge wire for relay terminals 30 and 87a

SlotCarCorner.com

Copyright © 2006 - 2021 by Slot Car Corner L.L.C.
All Rights Reserved.