G13 built-in lampholders with starter attachment
for lamps T8 and T12
Casing: PC, white, frontplate/rotor: PBT GF, white
T130, nominal rating: 2/500
Base push-in terminals: 0.5–1 mm²
Fixing holes for screws M3
Weight: 8.7/8 g, packaging unit: 1000 pcs.
Type: 47200/47600
Ref. No.: 101706 lampholder thickness: 13 mm
Ref. No.: 101765 lampholder thickness: 9.5 mm

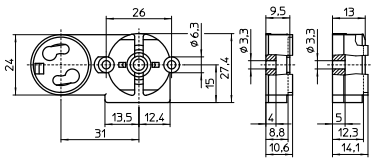

G13 built-in lampholders with starter attachment
for lamps T8 and T12
Casing: PC, white, frontplate/rotor: PBT GF, white
T130, nominal rating: 2/500
Base push-in terminals: 0.5–1 mm²
Rear split pins for wall thickness up to 1.2 mm
Weight: 9/9.5/8/8.5 g, packaging unit: 1000 pcs.
Type: 47205/47206 lampholder thickness: 13 mm
Ref. No.: 101712
Ref. No.: 101716 with spring adjustment
Type: 47605/47606 lampholder thickness: 9.5 mm
Ref. No.: 101769
Ref. No.: 101773 with spring adjustment

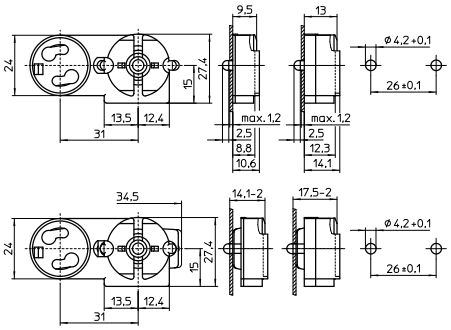

G13 built-in lampholder for lamps T8 and T12
Lampholder thickness: 10.7 mm
Casing: PC, white, frontplate/rotor: PBT GF, white
T130, nominal rating: 2/500
Push-in terminals: 0.5–1 mm²
Lateral fixing clips
Weight: 4.7 g, packaging unit: 1000 pcs.
Type: 47504
Ref. No.: 101745

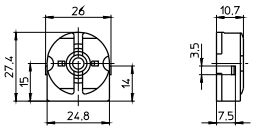

G13 lampholder
For push-fitting onto lamps T12
Lampholder thickness: 9.5 mm
Casing: PC, white, T110
Front cover plate: PBT GF, white
Nominal rating: 2/250
Push-in terminals: 0.5–1 mm²
Fixing holes for screws M3
Weight: 10.5 g, packaging unit: 1000 pcs.
Type: 47700
Ref. No.: 101781

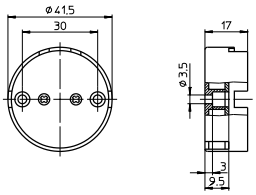
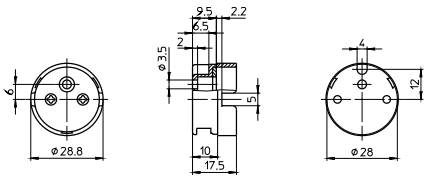
G13 lampholder
For push-fitting onto lamps T8
Lampholder thickness: 9.5 mm
Casing: PC, white, T110
Front cover plate: PBT GF, white
Nominal rating: 2/500
Push-in terminals: 0.5–1 mm²
Fixing hole for screw M3
Weight: 5.3 g, packaging unit: 1000 pcs.
Type: 47900
Ref. No.: 101784