CYVS100DK80F/C/R
CYVM100DK80F/C/R
CYVL100DK125F/C/R

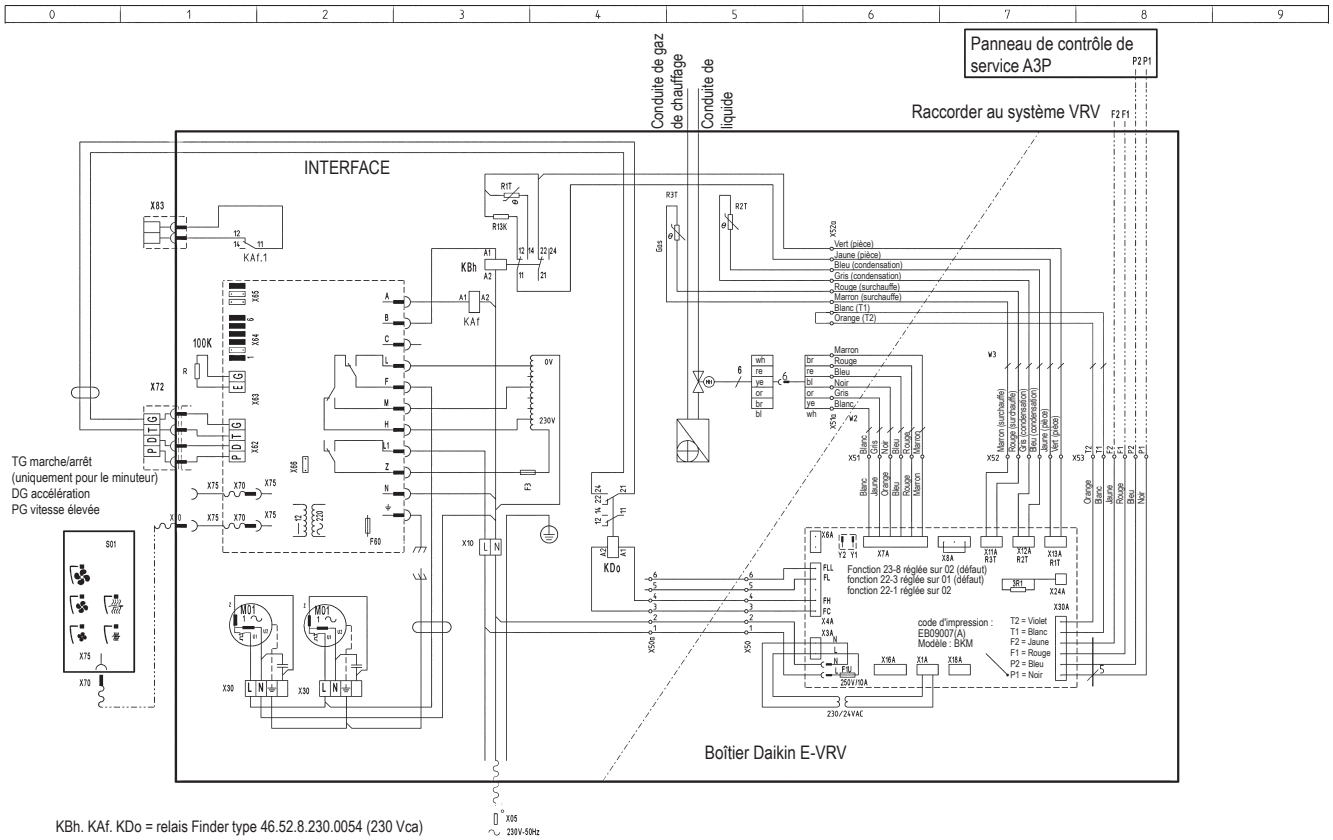

KBh. KAf. KDo = relais Finder type 46.52.8.230.0054 (230 Vca)