THIS COPY IS PROVIDED ON A RESTRICTED BASIS AND IS NOT TO BE USED IN ANY WAY DETRIMENTAL TO THE INTERESTS OF PANDUIT CORP.

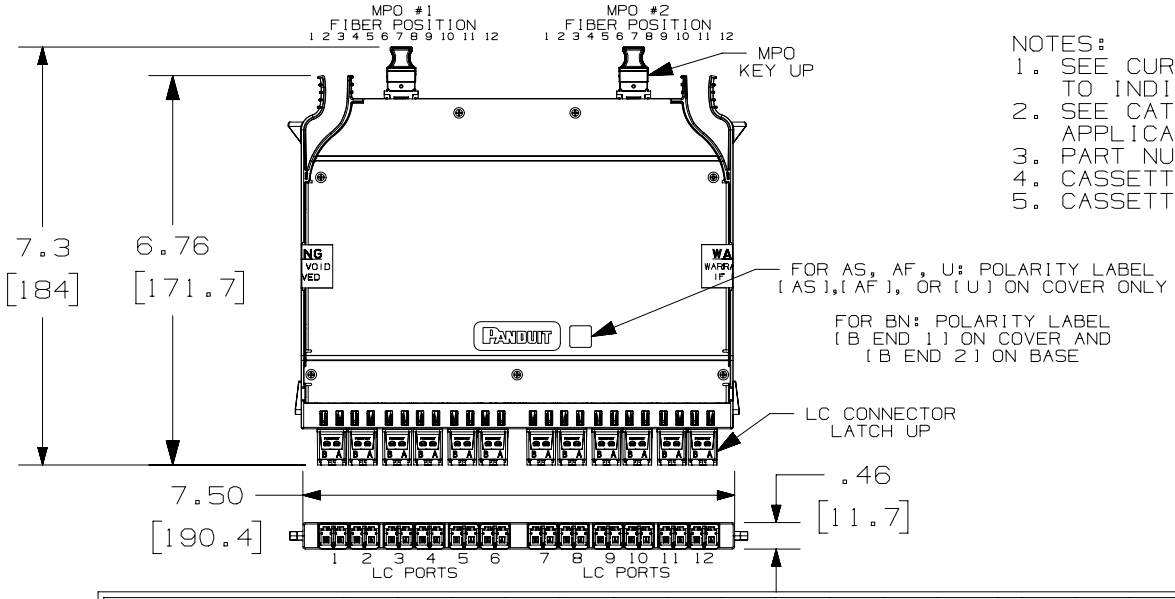

NOTES:
1. SEE CURRENT CATALOG FOR PART NUMBER SUFFIXES TO INDICATE COLOR AND/OR PACKAGE QUANTITIES.
2. SEE CATALOG FOR COMPLETE LIST OF PARTS APPLICABLE FOR USE WITH THIS PRODUCT.
3. PART NUMBERS: SEE SHEET 2 FOR ALL PART NUMBERS.
4. CASSETTE WIRING COMPLIES WITH ANSI/TIA-568.3-D.
5. CASSETTE WEIGHT: 6.3oz (178g)

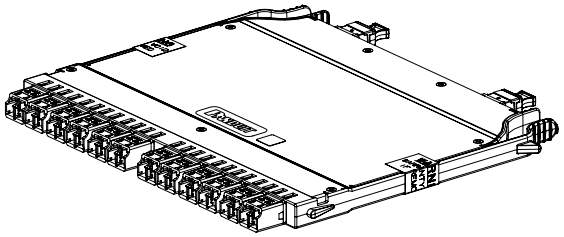

FIBER POSITION FROM LC END TO MPO END

METHOD A 24 - CASSETTE (AS)

	MPO #1												MPO #2											
LC PORT NUMBER	1		2		3		4		5		6		7		8		9		10		11		12	
	B	A	B	A	B	A	B	A	B	A	B	A	B	A	B	A	B	A	B	A	B	A	B	A
MPO FIBER POSITION	1	2	3	4	5	6	7	8	9	10	11	12	1	2	3	4	5	6	7	8	9	10	11	12

METHOD A FLIPPED 24 - CASSETTE (AF)

	MPO #1												MPO #2											
LC PORT NUMBER	1		2		3		4		5		6		7		8		9		10		11		12	
	B	A	B	A	B	A	B	A	B	A	B	A	B	A	B	A	B	A	B	A	B	A	B	A
MPO FIBER POSITION	2	1	4	3	6	5	8	7	10	9	12	11	2	1	4	3	6	5	8	7	10	9	12	11

METHOB B 24 - CASSETTE (BN)

	MPO #1												MPO #2											
LC PORT NUMBER	1		2		3		4		5		6		7		8		9		10		11		12	
	B	A	B	A	B	A	B	A	B	A	B	A	B	A	B	A	B	A	B	A	B	A	B	A
MPO FIBER POSITION	12	11	10	9	8	7	6	5	4	3	2	1	12	11	10	9	8	7	6	5	4	3	2	1

UNIVERSAL 24 - CASSETTE (U)

LC PORT NUMBER	1		2		3		4		5		6		7		8		9		10		11		12	
	B	A	B	A	B	A	B	A	B	A	B	A	B	A	B	A	B	A	B	A	B	A	B	A
MPO FIBER POSITION	1	12	2	11	3	10	4	9	5	8	6	7	1	12	2	11	3	10	4	9	5	8	6	7

REV	DATE	BY	CHK	APR	DESCRIPTION	ECN
03B	06-25-18	SAT	PJI	EJH	C. UPDATED NOTE 4. B. ADDED UNIVERSAL P/N's.	12F187MG-DC
03A	05-17-18	SAT	TMSE	EJH	A. ADDED P/N FHCZO-24-VLAS, FHCXO-24-10U, FHCZO-24-10U, FHC9N-24-10U, FHCXA-24-10U, FHCZA-24-10U & FHCSA-24-10U.	12F187MG-DC
00	09-16-16	SAT	TMSE	EJH	RELEASED TO PRODUCTION	12F187MG-DC

TITLE
HD FLEX CASSETTE, 12-PORT, 24 FIBER, DUPLEX LC TO (2) 12-FIBER MPO

CUSTOMER DRAWING

ITEM REVISION NAME: 12F187MG/03

DATASET FILE NAME: 12F187MG_DC/03B

PANDUIT

UNLESS OTHERWISE SPECIFIED, DIMENSIONAL TOLERANCES ARE: IN [mm]

.X ± .1 [2.54] .XXX ± .005 [.127]
.XX ± .01 [.25] ANGLES ± 5 °

THIRD ANGLE PROJECTION

MATERIAL:

DRAWING NUMBER: 12F187MG-DC

DRAWN BY	DATE	CHK	SCALE	SHT 1 OF 3	SIZE
SAT	09-09-16	TMSE	NONE		A

THIS COPY IS PROVIDED ON A RESTRICTED BASIS AND IS NOT TO BE USED IN ANY WAY DETRIMENTAL TO THE INTERESTS OF PANDUIT CORP.

CASSETTE PART NUMBER	DESCRIPTION
FHC9N-24-10AS	OS2 HD FLEX CASSETTE, 12-PORT DUPLEX LC TO (2) 12-FIBER MPO, METHOD A
FHC9N-24-10AF	OS2 HD FLEX CASSETTE, 12-PORT DUPLEX LC TO (2) 12-FIBER MPO, METHOD A PAIR FLIPPED
FHCX0-24-10AS	OM3 HD FLEX CASSETTE, 12-PORT DUPLEX LC TO (2) 12-FIBER MPO, OPTIMIZED LOSS, METHOD A
FHCX0-24-10AF	OM3 HD FLEX CASSETTE, 12-PORT DUPLEX LC TO (2) 12-FIBER MPO, OPTIMIZED LOSS, METHOD A PAIR FLIPPED
FHCX0-24-10BN	OM3 HD FLEX CASSETTE, 12-PORT DUPLEX LC TO (2) 12-FIBER MPO, OPTIMIZED LOSS, METHOD B
FHCZ0-24-10AS	OM4 HD FLEX CASSETTE, 12-PORT DUPLEX LC TO (2) 12-FIBER MPO, OPTIMIZED LOSS, METHOD A
FHCZ0-24-VLAS	OM4 HD FLEX CASSETTE, 12-PORT VIOLET DUPLEX LC TO (2) 12-FIBER MPO, OPTIMIZED LOSS, METHOD A
FHCZ0-24-10AF	OM4 HD FLEX CASSETTE, 12-PORT DUPLEX LC TO (2) 12-FIBER MPO, OPTIMIZED LOSS, METHOD A PAIR FLIPPED
FHCZ0-24-10BN	OM4 HD FLEX CASSETTE, 12-PORT DUPLEX LC TO (2) 12-FIBER MPO, OPTIMIZED LOSS, METHOD B
FHCZA-24-10AS	OM4 HD FLEX CASSETTE, 12-PORT DUPLEX LC TO (2) 12-FIBER MPO, ULTRA LOSS, METHOD A
FHCZA-24-10AF	OM4 HD FLEX CASSETTE, 12-PORT DUPLEX LC TO (2) 12-FIBER MPO, ULTRA LOSS, METHOD A PAIR FLIPPED
FHCZA-24-10BN	OM4 HD FLEX CASSETTE, 12-PORT DUPLEX LC TO (2) 12-FIBER MPO, ULTRA LOSS, METHOD B

REV	DATE	BY	CHK	APR	DESCRIPTION	ECN
					SEE SHEET 1 FOR REVISIONS	

TITLE

HD FLEX CASSETTE, 12-PORT, 24 FIBER, DUPLEX LC TO (2) 12-FIBER MPO

CUSTOMER DRAWING

ITEM REVISION NAME: 12F187MG/03

DATASET FILE NAME: 12F187MG_DC/03B

UNLESS OTHERWISE SPECIFIED, DIMENSIONAL TOLERANCES ARE: IN [mm]

.X ± .1 [2.54] .XXX ± .005 [.127]

.XX ± .01 [.25] ANGLES ± 5 °

THIRD ANGLE PROJECTION

MATERIAL:

DRAWING NUMBER: 12F187MG-DC

DRAWN BY	DATE	CHK	SCALE		SIZE
SAT	09-09-16	TMSE	NONE	SHT 2 OF 3	A

THIS COPY IS PROVIDED ON A RESTRICTED BASIS AND IS NOT TO BE USED IN ANY WAY DETRIMENTAL TO THE INTERESTS OF PANDUIT CORP.

CASSETTE PART NUMBER	DESCRIPTION
FHCX0-24-10U	OM3 HD FLEX CASSETTE, 12-PORT DUPLEX LC TO (2) 12-FIBER MPO, OPTIMIZED LOSS, UNIVERSAL
FHCZ0-24-10U	OM4 HD FLEX CASSETTE, 12-PORT DUPLEX LC TO (2) 12-FIBER MPO, OPTIMIZED LOSS, UNIVERSAL
FHC9N-24-10U	OM2 HD FLEX CASSETTE, 12-PORT DUPLEX LC TO (2) 12-FIBER MPO, STANDARD LOSS, UNIVERSAL
FHCXA-24-10U	OM3 HD FLEX CASSETTE, 12-PORT DUPLEX LC TO (2) 12-FIBER MPO, ULTRA LOSS, UNIVERSAL
FHCZA-24-10U	OM4 HD FLEX CASSETTE, 12-PORT DUPLEX LC TO (2) 12-FIBER MPO, ULTRA LOSS, UNIVERSAL
FHCSA-24-10U	OM4+ SIGNATURE CORE HD FLEX CASSETTE, 12-PORT DUPLEX LC TO (2) 12-FIBER MPO, ULTRA LOSS, UNIVERSAL

REV	DATE	BY	CHK	APR	DESCRIPTION	ECN
					SEE SHEET 1 FOR REVISIONS	

TITLE

HD FLEX CASSETTE, 12-PORT, 24 FIBER, DUPLEX LC TO (2) 12-FIBER MPO

CUSTOMER DRAWING

ITEM REVISION NAME: 12F187MG/03

DATASET FILE NAME: 12F187MG_DC/03B

UNLESS OTHERWISE SPECIFIED, DIMENSIONAL TOLERANCES ARE: IN [mm]

.X ± .1 [2.54] .XXX ± .005 [.127]

.XX ± .01 [.25] ANGLES ± 5 °

THIRD ANGLE PROJECTION

MATERIAL:

DRAWING NUMBER: 12F187MG-DC

DRAWN BY	DATE	CHK	SCALE		SIZE
SAT	09-09-16	TMSE	NONE	SHT 3 OF 3	A