FIBERRUNNER END CAP FITTINGS FOR USE WITH PANDUIT FIBERRUNNER 4X4, 6X4, 12X4 AND 24X4 ROUTING SYSTEMS

Part Number(s): FREC4X4**, FREC6X4**, FREC12X4**, FREC24X4**, FREC4X4L**, FREC6X4L**, FREC12X4L**, FREC24X4L**

© Panduit Corp. 2021

INSTALLATION INSTRUCTIONS

RW142

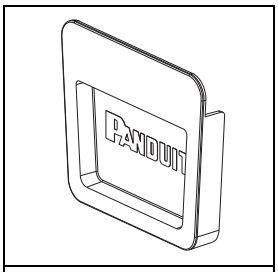

FREC4X4

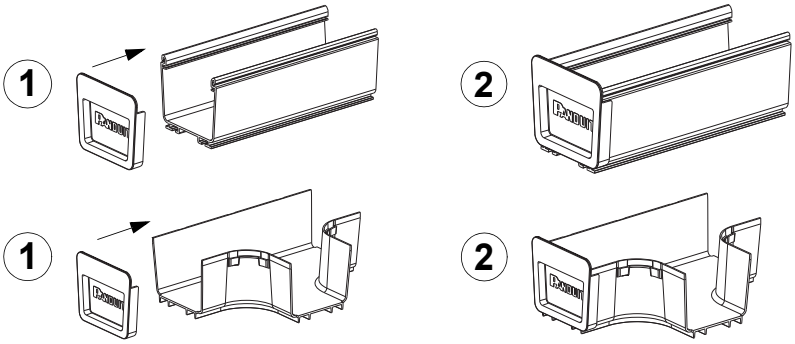

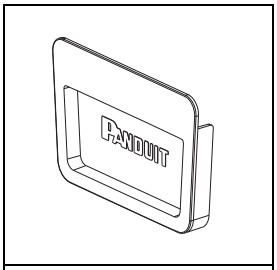

FREC6X4

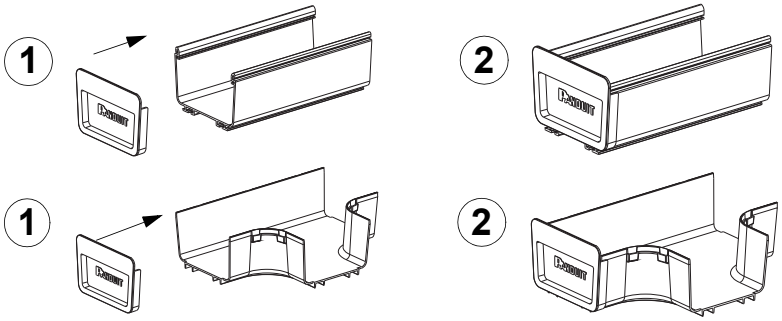

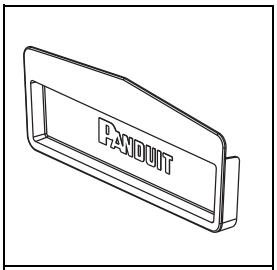

FREC12X4

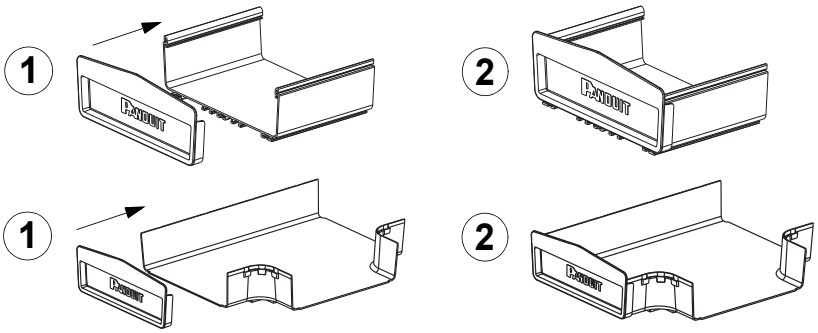

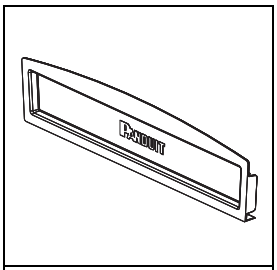

FREC24X4

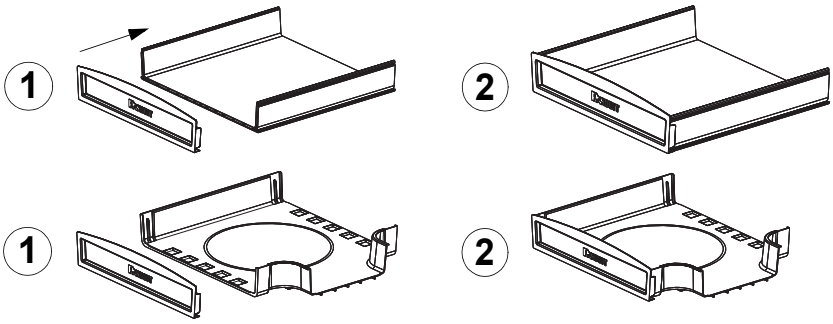

For Instructions in Local Languages and Technical Support:

www.panduit.com/resources/install_maintain.asp

www.panduit.com

E-mail:
techsupport@panduit.com

Phone:
866-405-6654