THIS COPY IS PROVIDED ON A RESTRICTED BASIS AND IS NOT TO BE USED IN ANY WAY DETRIMENTAL TO THE INTERESTS OF PANDUIT CORP.

PANDUIT P/N	WEIGHT
CMBRC5	.15 LBS/EACH 68 g/EACH

NOTES:
1. SEE CATALOG FOR COMPLETE LIST OF PARTS APPLICABLE FOR USE WITH THIS PRODUCT.
2. CAN BE MOUNTED TO EIA STANDARD RACKS USING THE EXISTING SCREWS THAT SUPPORT THE ACTIVE EQUIPMENT.
3. DIMENSIONS IN PARENTHESIS ARE METRIC.

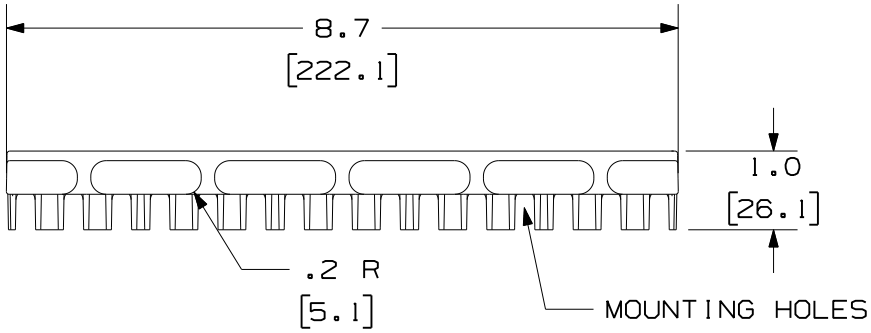

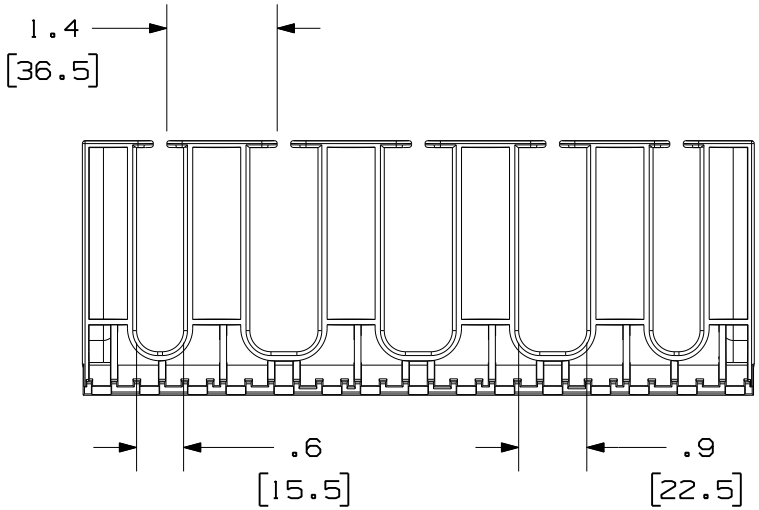

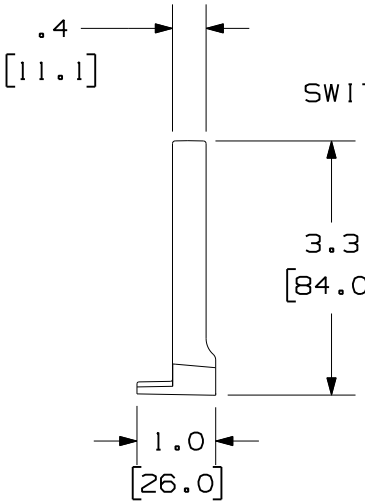

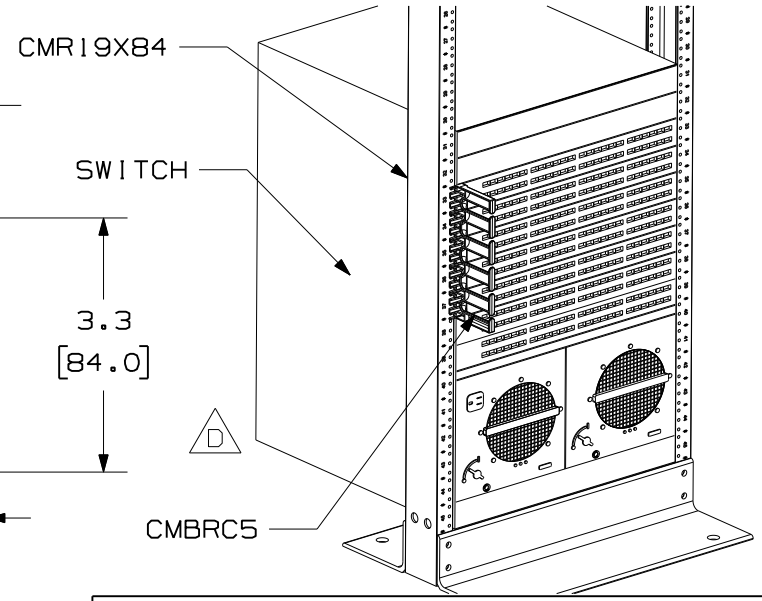

C

REV	DATE	BY	CHK	DESCRIPTION	ECN - R		CUST	SUP	OTH
OOD	4-22-09	BAME	DPN	D. CORRECTED P/N IN APPLICATION VIEW C. UPDATED REV NUMBER SCHEME	10024-09				
1	2-19-07	MLVO	DPN	B. ADDED DIMENSION A. REPLACED ISOMETRIC VIEW WITH APPLICATION VIEW.	10024-09		CMK		
R	6-11-02	JDWE	MECA	RELEASED TO PRODUCTION	10024-09	RTSU			

MODEL FILENAME: V10024HI/00

CAD FILENAME/LAYERS: V10024HI_DC/00D

PANDUIT CORP. TINLEY PARK, ILLINOIS

HORIZONTAL CARD CABLE MANAGER
FOR ACTIVE EQUIPMENT
(CMBRC5) CUSTOMER DRAWING

UNLESS OTHERWISE SPECIFIED, DIMENSIONAL TOLERANCES ARE:
(.X) ± .03 (.XXX) ± .005
(.XX) ± .015 ANGLES ± 1°

UNLESS OTHERWISE SPECIFIED, ALL DIMENSIONS ARE GIVEN IN INCHES, THIRD ANGLE PROJECTION.

DRAWN BY: JDWE

DATE: 6-11-02

CHK'D: MECA

MAT'L: POLYCARBONATE- BLACK

SCALE: NONE

DRAWING NO.: 10024-09

DWG SIZE: A