THIS COPY IS PROVIDED ON A RESTRICTED BASIS AND IS NOT TO BE USED IN ANY WAY DETRIMENTAL TO THE INTERESTS OF PANDUIT CORP.

PANDUIT PART NUMBER	LENGTH	WEIGHT	WEIGHT/LENGTH
FRHC12L**2 (SEE NOTE 1)	78.74 IN ±.36 IN (2000.0mm ±9.1mm)	8.3 LB (3765g)	1.27 LB/FT (18.9g/cm)
FRHC12L**6 (SEE NOTE 1)	72.00 IN ±.36 IN (1828.8mm ±9.1mm)	7.6 LB (3447g)	1.27 LB/FT (18.9g/cm)

NOTES:

1. SEE CURRENT CATALOG FOR ADDITIONAL PART SUFFIXES TO INDICATE COLOR AND/OR PACKAGE QUANTITY.
2. DIMENSIONS IN PARENTHESES ARE IN METRIC.

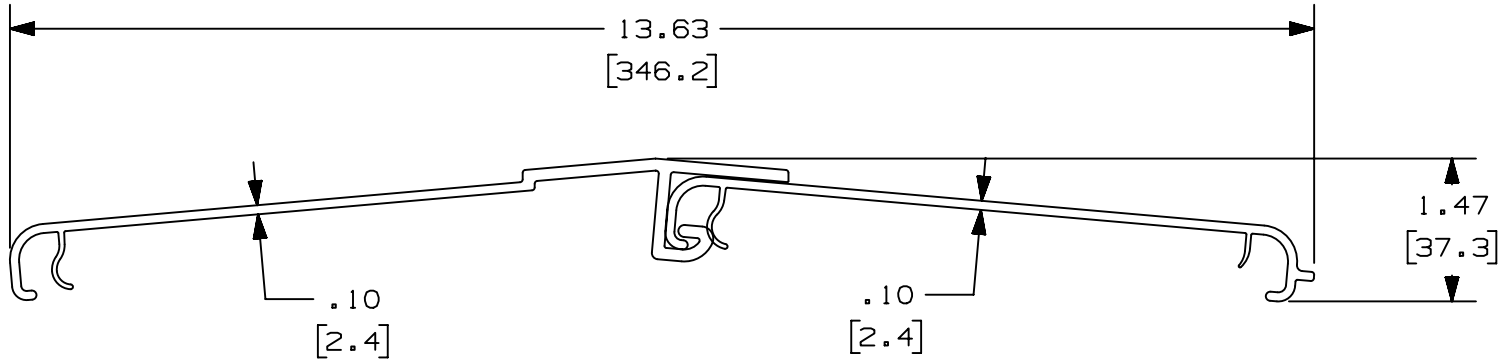

REV	DATE	BY	CHK	APR	DESCRIPTION	ECN
00A	11-21-19	MES	DWR	DWR	RELEASED TO PRODUCTION	V09002DZ/00

TITLE

LOW SMOKE ZERO HALOGEN FIBERRUNNER 12x4 SNAP-ON HINGED COVER (FRHC12L**2, FRHC12L**6)

CUSTOMER DRAWING

ITEM REVISION NAME: 00478EAB/00

DATASET FILE NAME: 00478EAB_DC_FRHC12L/00A

UNLESS OTHERWISE SPECIFIED, DIMENSIONAL TOLERANCES ARE: IN [mm]

.X ± .XXX ±

.XX ± .03 [.8] ANGLES ±

THIRD ANGLE PROJECTION

MATERIAL: PC

DRAWING NUMBER: 00478EAB-DC

DRAWN BY	DATE	CHK	SCALE	SHT 1 OF 1	SIZE
MES	11-21-19	DWR	NONE		A

D10100DA/15