THIS COPY IS PROVIDED ON A RESTRICTED BASIS AND IS NOT TO BE USED IN ANY WAY DETRIMENTAL TO THE INTERESTS OF PANDUIT CORP.

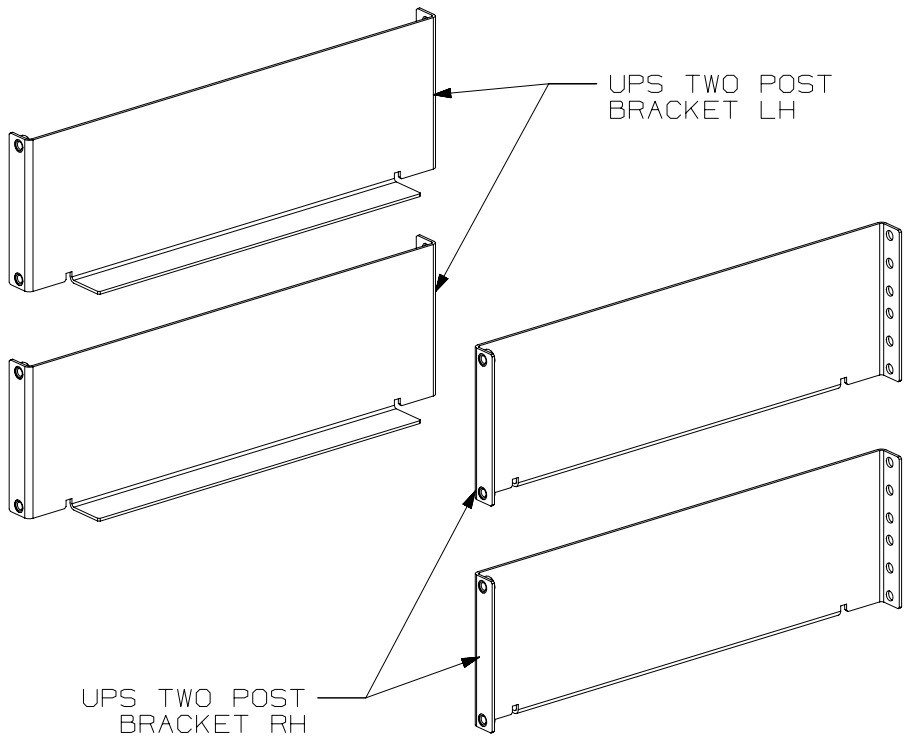

NOTES:
1. VISIT OUR ON-LINE CATALOG AT WWW.PANDUIT.COM FOR A LIST OF CURRENT PARTS APPLICABLE FOR USE WITH THIS PRODUCT.
2. PRIMARY DIMENSIONS ARE IN MILLIMETERS.
3. PARTS SUPPLIED:
   (2) UPS TWO POST BRACKET RH
   (2) UPS TWO POST BRACKET LH
   (28) #12-24 SCREWS (NOT SHOWN)
4. INSTALLATION INSTRUCTION (NOT SHOWN)

PANDUIT PART NO.	SHIPPING WEIGHT
U2PTRMT	*.** Kg/EACH *.* LBS/EACH

WE ASK THAT YOU CHECK FULLY THE DIMENSIONS, NOTES, AND SIGN THE CLIENT SIGNATURE BOX. THE JOB WILL NOT PROGRESS WITHOUT SIGNED APPROVAL. PLEASE DO NOT DELAY IN RETURNING PROOF AS IT WILL AFFECT DELIVERY.	SIGN
	DATE
	PRINT

REV	DATE	BY	CHK	APR	DESCRIPTION	ECN
00A	12/7/22	MEX-JAGC	GLM	MJD	DRAWING RELEASE	V09002SS/00

PART NUMBER: U2PTRMT

TITLE: 2-POST RACK-MOUNT ADAPTER KIT FOR RACK MOUNT 2RU UPS BATTERY SYSTEMS-BLACK

CUSTOMER DRAWING

ITEM REVISION NAME: U2PTRMT/00

DATASET FILE NAME: U2PTRMT_DC/00A

THIRD ANGLE PROJECTION

MATERIAL: N/A

DRAWING NUMBER: U2PTRMT-DC

DRAWN BY	DATE	CHK	SCALE		SIZE
MEX-JAGC	12/7/22	GLM	NONE	SHEET 1 OF 2	A

A-SIZE CUSTOMER

THIS COPY IS PROVIDED ON A RESTRICTED BASIS AND IS NOT TO BE USED IN ANY WAY DETRIMENTAL TO THE INTERESTS OF PANDUIT CORP.

UPS TWO POST BRACKET LH

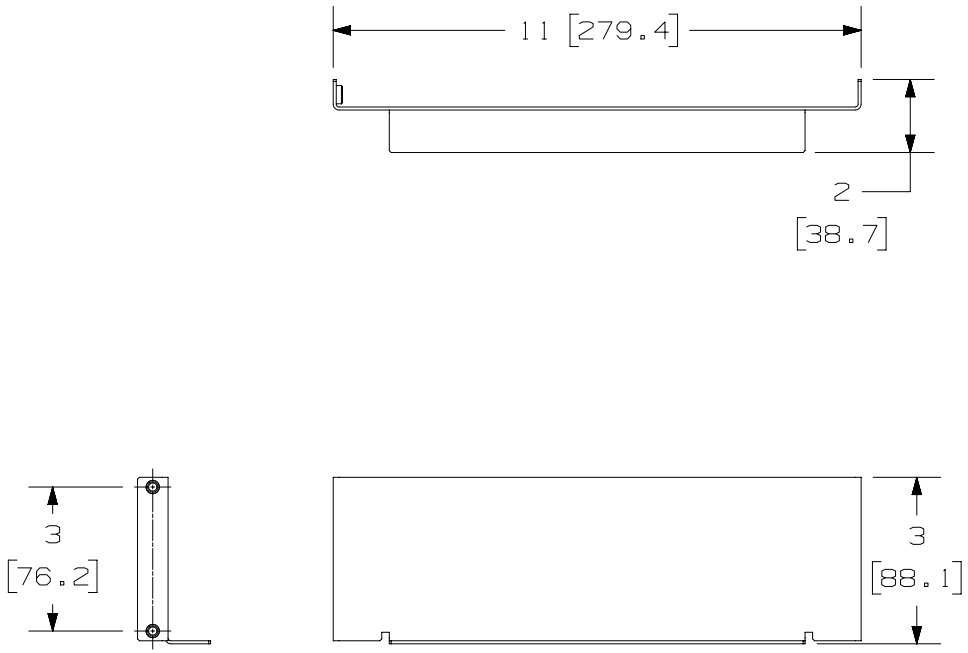

UPS TWO POST BRACKET RH

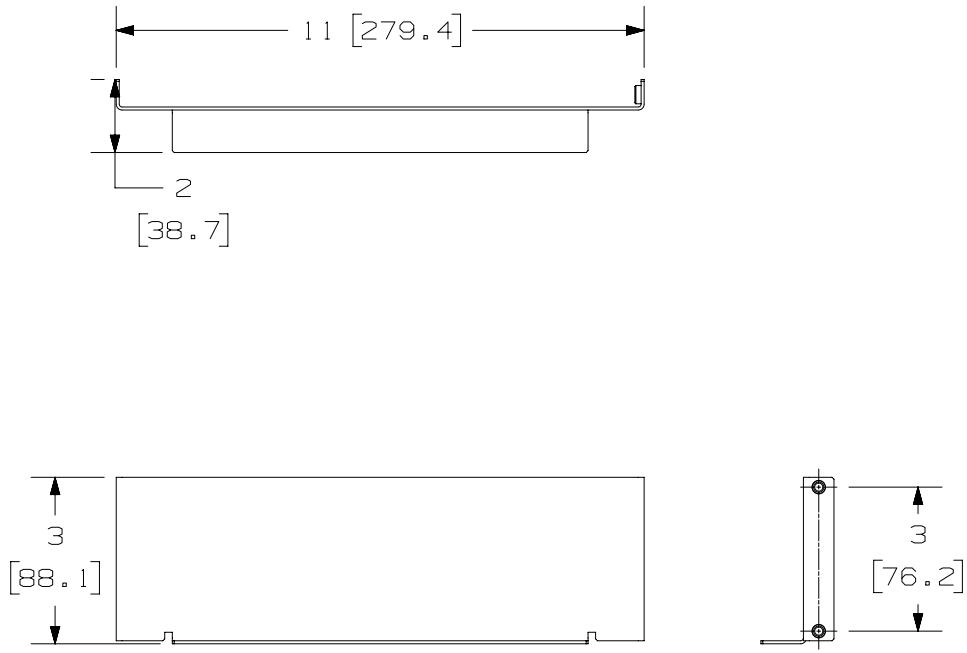

REV	DATE	BY	CHK	APR	DESCRIPTION	ECN
00A	12/7/22	MEX-JAGC	GLM	MJD	DRAWING RELEASE	V09002SS/00

PART NUMBER: U2PTRMT

TITLE: UPS TWO POST BRACKET

CUSTOMER DRAWING

ITEM REVISION NAME: U2PTRMT/00

DATASET FILE NAME: U2PTRMT_DC/00A

THIRD ANGLE PROJECTION

MATERIAL: N/A

DRAWING NUMBER: U2PTRMT-DC

DRAWN BY	DATE	CHK	SCALE		SIZE
MEX-JAGC	12/7/22	GLM	NONE	SHEET 2 OF 2	A

A-SIZE CUSTOMER